LOWELL
THORNDIKE STREET
TYPICAL SECTIONS
SHEET 06 OF 212

PAVEMENT NOTES

PROPOSED BRIDGE WEARING SURFACE

SURFACE:	1 ½"	SUPERPAVE BRIDGE SURFACE COURSE - 9.5 POLYMER (SSC-B-9.5-P)
PROTECTIVE:	1 ½"	SUPERPAVE BRIDGE PROTECTIVE COURSE - 9.5 (SPC-B-9.5)

BRICK WALK

SURFACE:		BRICK PAVERS
INTERMEDIATE:	¾"	HMA SETTING BED
BASE COURSE:	4"	CEMENT CONCRETE AIR ENTRAINED, 4000 PSI, ¾", 610 WITH 6x6 W1.4 x W1.4 WWM REINFORCEMENT
SUBBASE:	8"	GRAVEL BORROW (TYPE b) OR RECLAIMED PAVEMENT BORROW

HMA BIKE LANE AT TREEWAY

SURFACE:	1 ½"	SUPERPAVE SURFACE COURSE - 9.5 (SSC-9.5)
INTERMEDIATE:	6"	CEMENT CONCRETE AIR ENTRAINED, 400O PSI, ¾", 610 WITH 6x6 W1.4 x W1.4 WWM REINFORCEMENT
BASE COURSE:	6"	CRUSHED COURSE
SUBBASE:	18"	STRUCTURAL SOIL

CEM CONC WALK AT TREEWAY

SURFACE:	6"	CEMENT CONCRETE AIR ENTRAINED, 400O PSI, ¾", 610 WITH 6x6 W1.4 x W1.4 WWM REINFORCEMENT
BASE COURSE:	6"	CRUSHED COURSE
SUBBASE:	18"	STRUCTURAL SOIL

TEMPORARY HOT MIX ASPHALT WALK/WCR

SURFACE:	2"	SUPERPAVE SURFACE COURSE - 9.5 (SSC-9.5)
BASE COURSE:	8"	GRAVEL BORROW (TYPE b) OR RECLAIMED PAVEMENT BORROW

PROPOSED SCORED CEMENT CONCRETE

SURFACE:	7"	CEMENT CONCRETE AIR ENTRAINED 5000 PSI, ⅜", 710
SUBBASE:	8"	GRAVEL BORROW (TYPE b)

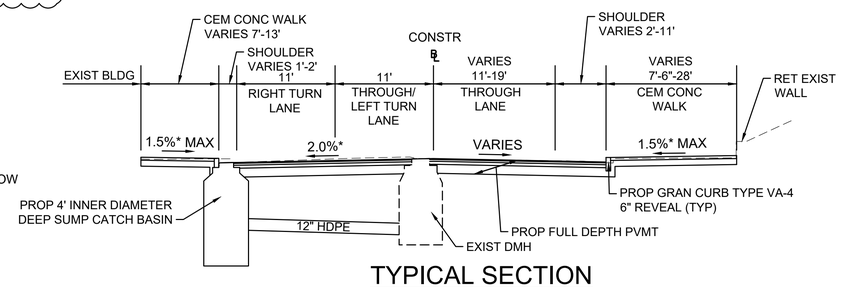

TYPICAL SECTION
APPLETON STREET
STATION 75+66 TO 76+54

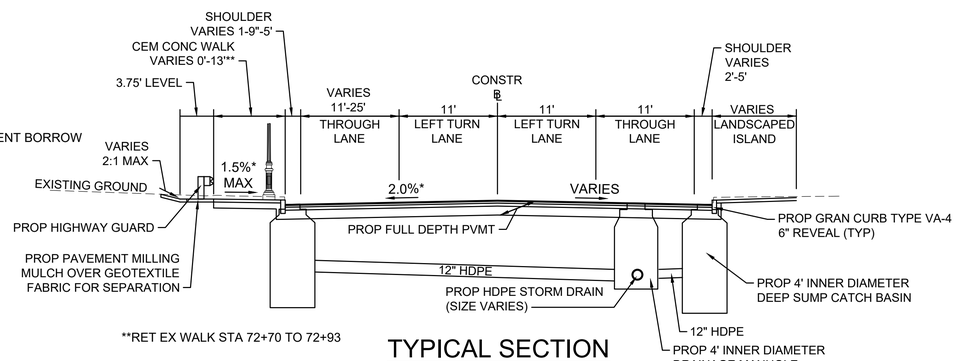

**RET EX WALK STA 72+70 TO 72+93

TYPICAL SECTION
CHELMSFORD STREET
STATION 72+70 TO 73+79

*TOLERANCE FOR CONSTRUCTION = ±0.5%

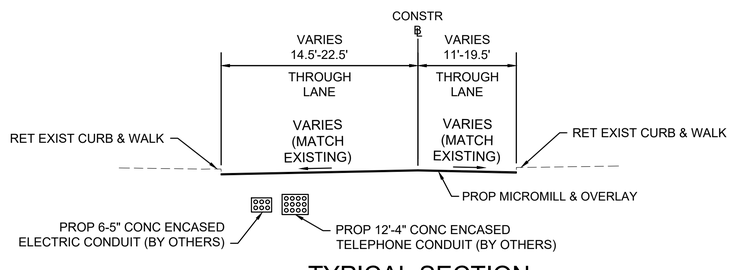

TYPICAL SECTION
MIDDLESEX STREET
STATION 64+90 TO 69+19

REVISIONS		
NO.	REVISION DESCRIPTION	DATE
1	PAVEMENT CHANGES	8/2/19

PAVEMENT NOTES

PROPOSED FULL DEPTH PAVEMENT

SURFACE:	2"	SUPERPAVE SURFACE COURSE - 12.5 POLYMER (SSC-12.5-P)
INTERMEDIATE:	2"	SUPERPAVE INTERMEDIATE COURSE - 12.5 (SIC-12.5)
BASE COURSE:	3 ½ "	SUPERPAVE INTERMEDIATE COURSE - 19.0 (SIC-19.0)
+ SUBBASE:	4" 8"	DENSE GRADED CRUSHED STONE FOR SUB-BASE OVER GRAVEL BORROW (TYPE b) OR RECLAIMED PAVEMENT BORROW
SUBGRADE	24"	SPECIAL BORROW * *WHERE REQUIRED IN AREAS OF FILL

PROPOSED FULL DEPTH PAVEMENT LESS THAN 4.0' WIDE

SURFACE:	2"	SUPERPAVE SURFACE COURSE - 12.5 POLYMER (SSC-12.5-P)
INTERMEDIATE:	2"	SUPERPAVE INTERMEDIATE COURSE - 12.5 (SIC-12.5)
BASE COURSE:	7 ½"	HIGH EARLY STRENGTH CEMENT CONCRETE BASE COURSE
+ SUBBASE:	8"	GRAVEL BORROW (TYPE b) OR RECLAIMED PAVEMENT BORROW

PROPOSED PAVEMENT MICROMILLING AND OVERLAY

SURFACE:	2"	SUPERPAVE SURFACE COURSE - 12.5 POLYMER (SSC-12.5-P)
++ LEVELING:		VARIABLE DEPTH SUPERPAVE LEVELING COURSE - 4.75 (SIC-4.75)
MILLING:	2"	PAVEMENT MICROMILLING

PROPOSED PAVEMENT MICROMILLING AND OVERLAY AT BRIDGE

SURFACE:	1 ½ "	SUPERPAVE BRIDGE SURFACE COURSE - 9.5 POLYMER (SSC-B-9.5-P)
MILLING:	1"	PAVEMENT MICROMILLING

PROPOSED HOT MIX ASPHALT BIKE LANE

SURFACE:	1 ½"	SUPERPAVE SURFACE COURSE - 9.5 (SSC-9.5)
INTERMEDIATE:	2 ½"	SUPERPAVE INTERMEDIATE COURSE - 12.5 (SIC-12.5)
+ SUBBASE:	8"	GRAVEL BORROW (TYPE b) OR RECLAIMED PAVEMENT BORROW

PROPOSED HOT MIX ASPHALT DRIVEWAY

SURFACE:	1 ½"	SUPERPAVE SURFACE COURSE - 9.5 (SSC-9.5)
INTERMEDIATE:	2"	SUPERPAVE INTERMEDIATE COURSE - 12.5 (SIC-12.5)
+ SUBBASE:	8"	GRAVEL BORROW (TYPE b) OR RECLAIMED PAVEMENT BORROW

PROPOSED CEMENT CONCRETE SIDEWALK, DRIVEWAY, MEDIAN & WHEELCHAIR RAMP

SURFACE:	4"	CEMENT CONCRETE AIR ENTRAINED 4000 PSI, ¾", 610 (6" AT DRIVEWAY APRONS)
+ SUBBASE:	8"	GRAVEL BORROW (TYPE b) OR RECLAIMED PAVEMENT BORROW

TEMPORARY FULL DEPTH PAVEMENT

INTERMEDIATE:	2 ¼"	SUPERPAVE INTERMEDIATE COURSE - 12.5 (SIC-12.5)
BASE COURSE:	4"	SUPERPAVE INTERMEDIATE COURSE COURSE - 19.0 (SIC-19.0)
+ SUBBASE:	12"	GRAVEL BORROW (TYPE b) OR RECLAIMED PAVEMENT BORROW

\+ WHERE EXISTING GRAVEL IS FOUND TO BE SUITABLE, THE EXISTING GRAVEL MAY BE USED IN PROPOSED SUBBASE, AFTER APPROVAL BY THE ENGINEER.

++ LEVELING COURSE DEPTH VARIES TO ACCOMMODATE DEFICIENCIES IN THE SURFACE DUE TO THE PRESENCE OF EXISTING COBBLES.

GENERAL NOTES:

1. ALL HOT MIX ASPHALT PAVEMENT SHALL BE CONSTRUCTED IN ACCORDANCE WITH SECTION 450 QUALITY ASSURANCE FOR HMA.
2. ALL HOT MIX ASPHALT PAVEMENT SHALL BE PRODUCED IN ACCORDANCE WITH SECTION 455 SUPERPAVE HMA SPECIFICATIONS.
3. ASPHALT EMULSION FOR TACK COAT (ITEM 452.) SHALL BE SPRAY APPLIED FOR DOUBLE OVERLAP COVERAGE AT 0.07 GAL/SY OVER MILLED SURFACES AND 0.05 GAL/SY OVER SMOOTH SURFACES.
4. HMA JOINT SEALANT (ITEM 453.) SHALL BE APPLIED IN SURFACE COURSE AT ALL VERTICAL COLD JOINTS PRIOR TO HMA PAVING.
5. ALL HOT MIX ASPHALT BIKE LANE AND HOT MIX ASPHALT BIKE LANE AT TREEWAY SHALL BE ESTIMATED AND PAID FOR UNDER ITEM 702 OF STANDARD SPECIFICATIONS FOR HIGHWAYS AND BRIDGES AND SHALL NOT BE SUBJECT TO SUPERPAVE QUALITY REQUIREMENTS.
6. ALL HOT MIX ASPHALT DRIVEWAYS SHALL BE ESTIMATED AND PAID FOR UNDER ITEM 703 OF STANDARD SPECIFICATIONS FOR HIGHWAYS AND BRIDGES AND SHALL NOT BE SUBJECT TO SUPERPAVE QUALITY REQUIREMENTS.
7. ALL TEMPORARY FULL DEPTH PAVEMENT AND TEMPORARY HOT MIX ASPHALT WALK SHALL ESTIMATED AND PAID FOR UNDER ITEM 472 FOR HIGHWAYS AND BRIDGES AND SHALL NOT BE SUBJECT TO SUPERPAVE QUALITY REQUIREMENTS.
8. ALL TEMPORARY HOT MIX ASPHALT WHEELCHAIR RAMP SHALL BE ESTIMATED AND PAID FOR UNDER ITEM 472.1 AND SHALL NOT BE SUBJECT TO SUPERPAVE QUALITY REQUIREMENTS.
9. ALL SUPERPAVE HOT MIX ASPHALT SHALL BE PRODUCED WITH A WARM MIX ASPHALT TECHNOLOGY. ALL ROADWAY SUPERPAVE SURFACE COURSE SHALL BE POLYMER MODIFIED ASPHALT.

607862_HD(TYP).DWG Plotted on 2-Aug-2019 3:15 PM

LOWELL
THORNDIKE STREET
UTILITY PLANS
WATER DRAINAGE & SEWER
SHEET 32 OF 212

LEGEND:
(XX) DRAINAGE STRUCTURE LABEL
SEE SHEET 36 FOR STRUCTURE TABLES

CONSTRUCTION NOTES:
1. EXISTING PIPE WITHIN PROPOSED ROADWAY PAVEMENT LOCATIONS SHALL BE FILLED WITH CONTROLLED DENSITY FILL AND ABANDONED UNLESS OTHERWISE NOTED.
2. EXISTING PIPE AND CONDUIT OUTSIDE PROPOSED ROADWAY PAVEMENT LOCATIONS SHALL BE PLUGGED AND ABANDONED IN PLACE.
3. INSTALL SILT SACKS IN ALL EXISTING CATCH BASINS BEFORE COMMENCING WORK AND IN ALL PROPOSED CATCH BASINS IN PAVED AREAS AFTER INTERMEDIATE COURSE IS PLACED, OR AS DIRECTED BY THE ENGINEER.
4. SEE TRAFFIC PLANS FOR TRAFFIC SIGNAL EQUIPMENT DETAILS.

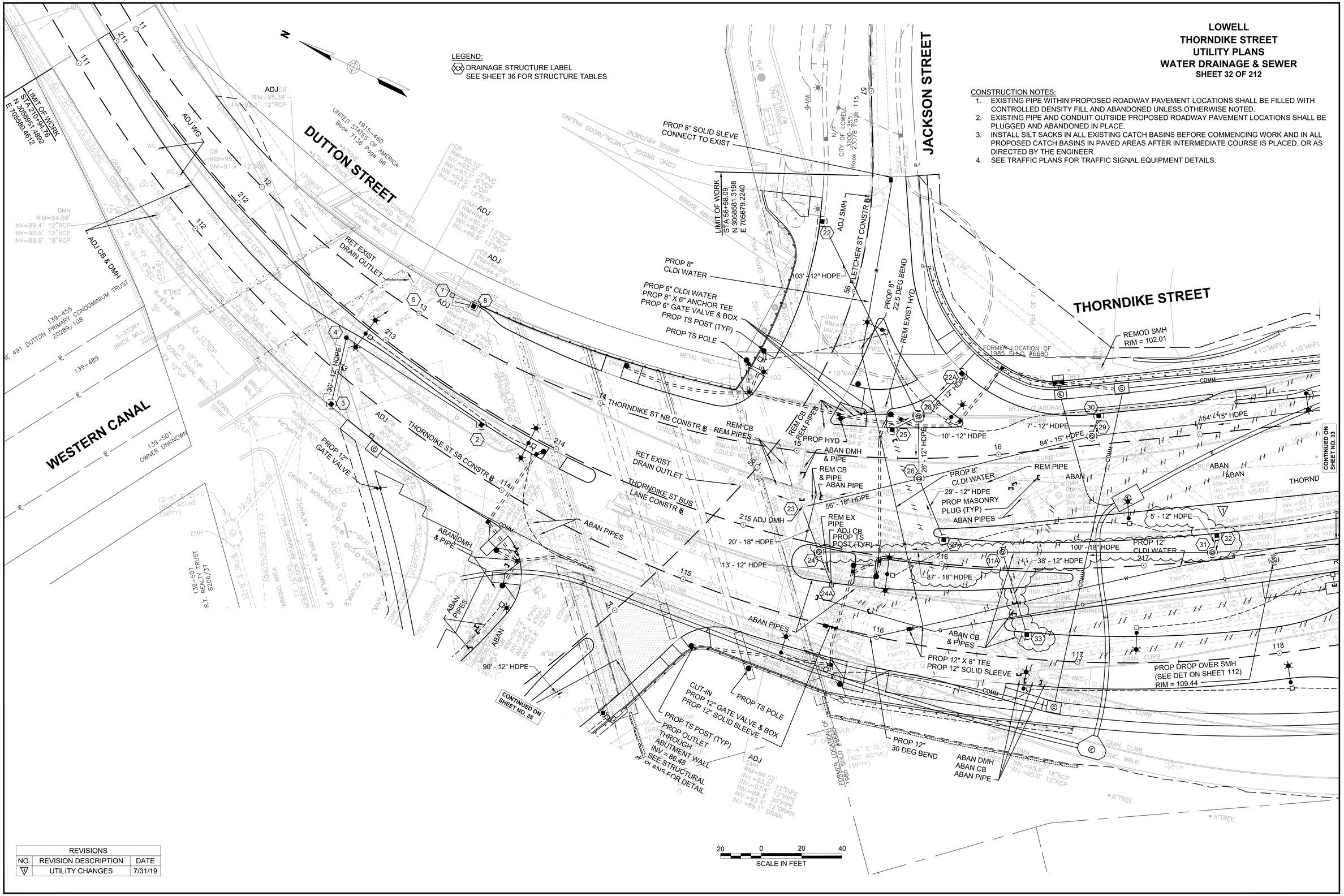

REVISIONS		
NO.	REVISION DESCRIPTION	DATE
7	UTILITY CHANGES	7/31/19

607862_HDI(UTIL).DWG Plotted on 2-Aug-2019 10:05 AM

REVISIONS		
NO.	REVISION DESCRIPTION	DATE
1	UTILITY CHANGES	7/31/19

LOWELL
THORNDIKE STREET
UTILITY PLANS
WATER DRAINAGE & SEWER
SHEET 36 OF 212

607862_HD(UTIL).DWG Plotted on 2-Aug-2019 10:06 AM

THORNDIKE STREET DRAINAGE STRUCTURE DATA

NO.	TYPE	STATION	RIM ELEV.	INV. IN	INV. OUT	REMARKS
2	CBCI	213+62.3 7.7 RT	97.16		94.16	
3	CBCI	212+98.2 41.5 RT	96.43		92.20	
4	CIT	212+84.2 11.2 RT	96.33	(3) 92.00 (2) 93.37	91.80	PROP F&C
5	EX DMH	212+95.1 28.6 LT	96.10	(4) 90.60	89.80	ADJ.
7	EX DMH	213+14.0 34.7 LT	96.05	(8) 93.55		ADJ.
8	GICI	213+25.9 39.2 LT	96.60		93.60	
23	EX DMH	215+26.0 15.9 LT	99.58	(24) 95.30 (26) 91.49	89.10	ADJ.
24	DMH	215+39.4 3.7 RT	100.70	(24A) 96.10 (31A) 96.00	95.90	
24A	EX CB	215+48.6 18.3 RT	100.65		96.30	ADJ.
25	CBCI	215+65.0 62.6 LT	99.40		96.40	
26	DMH	215+83.5 40.6 LT	100.27	(27) 96.40 (28) 92.59 (29) 97.02	92.09	
27	CBCI	215+99.9 12.0 LT	101.42		97.10	
28	DMH	215+78.6 71.0 LT	100.18	(22) 93.00 (25) 96.25 (22A) 96.00	92.90	5' DIA
29	DMH	216+76.8 65.2 LT	103.50	(35) 100.25 (30) 100.43	100.18	
30	CBCI	216+80.9 75.0 LT	103.54		100.54	
31	DMH	217+34.4 3.8 LT	107.96	(39) 103.50 (32) 103.40	101.50	
31A	DMH	216+29.8 7.8 LT	102.63	(31) 98.40 (33) 98.40	98.30	
32	CBCI	217+37.4 12.0 LT	107.80		103.50	
33	CBCI	216+42.7 32.4 RT	103.95		99.65	
35	DMH	218+42.1 65.7 LT	111.93	(36) 107.60 (42) 107.68	105.80	
36	CBCI	218+45.8 72.1 LT	112.00		107.70	
37	CBCI	218+83.2 11.9 LT	115.09		110.80	
38	CBCI	218+69.7 26.0 RT	115.27		111.00	

FLETCHER STREET DRAINAGE STRUCTURE DATA

NO.	TYPE	STATION	RIM ELEV.	INV. IN	INV. OUT	REMARKS
9	CB	52+14.1 22.8 LT	96.52		92.52	
10	CBCI	51+58.2 19.9 RT	97.48		94.66	
11	EX DMH	51+98.5 0.6 RT	97.06	(12) 88.90 (9) 92.24	84.10	ADJ.
12	EX DMH	51+81.9 14.4 RT	97.15	(10) 94.41	89.60	ADJ.
13	CB	52+43.4 23.0 LT	96.37		89.25	
13A	CBCI	52+91.8 24.0 LT	96.78		92.78	
14	CBCI	52+70.2 32.9 RT	96.28		91.91	
15	DMH	52+63.7 27.4 RT	96.32	(13) 88.85 (14) 91.80 (18) 91.65	88.75	
18	CBCI	52+50.9 32.1 RT	96.17		91.85	
20	DMH	52+94.9 5.1 RT	97.14	(15) 88.40 (13A) 92.50	88.30	
22	CB	56+32.1 23.1 LT	97.16		94.12	
22A	CB	55+81.2 63.1 RT	99.30		96.30	

THORNDIKE STREET DRAINAGE STRUCTURE DATA

NO.	TYPE	STATION	RIM ELEV.	INV. IN	INV. OUT	REMARKS
39	DMH	218+80.1 6.0 RT	115.29	(49) 110.50 (40) 111.00 (37) 110.60 (38) 110.70	109.00	5' DIA
40	EX DMH	219+19.2 94.2 RT	120.86	(41) 114.60	114.50	REMOD
42	DMH	219+93.4 65.2 LT	118.61	(44) 115.26 (45) 111.86 (53) 115.36	111.61	5' DIA
44	CB	219+89.7 72.0 LT	118.34		115.34	
48	DMH	220+74.0 21.5 RT	123.33	(52) 118.90 (51) 116.61	116.51	
49	DMH	220+65.1 6.3 RT	122.27	(56) 116.10 (48) 116.33 (50) 117.40	116.00	
50	CBCI	220+69.1 12.0 LT	121.91		117.60	
51	OCS	220+53.0 108.4 RT	123.92		117.50	SEE DETAILS SHEET 113
52	CBCI	220+65.5 26.0 RT	122.80		119.00	
53	DMH	220+77.3 65.5 LT	120.82	(54) 116.30 (58) 116.30	116.20	
54	CBCI	220+79.5 73.8 LT	120.65		116.40	
56	DMH	221+87.6 6.0 RT	125.37	(59) 121.10 (57) 120.60 (69) 117.42	117.32	
57	CBCI	221+92.0 12.0 LT	125.13		120.80	
58	DMH	221+92.0 65.6 LT	124.92	(60) 121.00 (72) 118.89	118.79	
59	CBCI	221+92.2 26.0 RT	125.97		121.70	
60	CBCI	221+93.8 72.0 LT	124.07		121.07	
69	DMH	223+06.0 5.7 RT	127.95	(69A) 118.70 (71) 123.20	118.60	
69A	DMH	223+91.2 2.2 RT	128.90	(82A) 119.65 (72A) 124.18	119.55	
71	CBCI	223+12.3 12.0 LT	127.72		123.40	
72	CBCI	223+13.3 71.5 LT	126.86		120.11	
72A	CBCI	224+12.6 68.7 LT	127.92		124.92	
74	CBCI	223+20.5 33.3 RT	128.69		125.69	
77A	GI	224+94.9 69.7 RT	125.43		121.43	PROP BEEHIVE GRATE

MIDDLESEX STREET DRAINAGE STRUCTURE DATA

NO.	TYPE	STATION	RIM ELEV.	INV. IN	INV. OUT	REMARKS
41	CBCI	61+74.9 17.0 LT	123.75		115.34	
45	CBCI	64+66.2 21.0 LT	116.67		112.67	

SUMMER STREET DRAINAGE STRUCTURE DATA

NO.	TYPE	STATION	RIM ELEV.	INV. IN	INV. OUT	REMARKS
81	CBCI	80+83.5 16.3 LT	127.97		124.83	
81A	CBCI	81+11.8 16.3 LT	128.88		126.09	
82	DMH	80+59.6 7.7 LT	128.36	(81) 124.65	124.49	
82B	EX DMH	81+19.6 0.9 LT	129.92	(81A) 125.92 (83) 124.59		
83	CB	80+93.6 16.4 RT	128.13		124.94	

APPLETON STREET DRAINAGE STRUCTURE DATA

NO.	TYPE	STATION	RIM ELEV.	INV. IN	INV. OUT	REMARKS
61	CBCI	75+86.3 23.0 LT	125.19		120.70	
64	EX SMH	75+94.9 3.2 LT	125.68	(61) 120.40		REMOD

THORNDIKE STREET DRAINAGE STRUCTURE DATA

NO.	TYPE	STATION	RIM ELEV.	INV. IN	INV. OUT	REMARKS
78	DMH	226+26.5 6.4 RT	126.83	(79) 122.99 (80) 122.35	122.10	
79	CB	226+38.1 11.8 LT	126.21		123.21	
80	CB	226+40.3 35.1 RT	125.67		122.67	
82A	DMH	225+22.2 7.0 RT	129.67	(78) 121.06 (82) 123.80 (77A) 121.09	120.84	
84	CBCI	227+37.5 35.7 LT	121.44		118.44	
85	CBCI	227+85.4 35.0 RT	120.21		117.26	
86	DMH	228+05.0 11.6 LT	120.07	(84) 117.01 (85) 116.74	114.25	
87	CBCI	228+58.2 30.9 LT	118.96		114.60	
88	DMH	228+78.4 23.8 LT	118.97	(97) 114.50 (86) 113.50	113.38	
89	CBCI	228+80.3 43.9 RT	118.66		114.40	
90	DMH	228+81.3 34.7 LT	119.83	(91) 114.30 (87) 114.30 (88) 113.25	113.15	
90A	EX DMH	229+37.9 61.9 LT	114.46	(90) 112.54		
91	CBCI	228+91.8 29.6 LT	118.82		114.50	
92	CBCI	229+00.3 44.0 RT	118.62		114.30	
93	DMH	229+00.8 51.7 RT	119.44	(89) 114.20 (92) 114.20	114.10	
94	EX DMH	229+14.3 48.0 RT	119.18	(98) 114.00 (93) 114.00		ADJ.
96	CBCI	229+35.3 43.9 RT	118.74		114.40	
97	CBCI	229+22.8 28.3 LT	118.92		114.90	
98	DMH	229+35.3 51.0 RT	119.61	(99) 114.50 (96) 114.30	114.40	
99	CBCI	229+71.4 44.0 RT	119.13		114.80	

CHELMSFORD STREET DRAINAGE STRUCTURE DATA

NO.	TYPE	STATION	RIM ELEV.	INV. IN	INV. OUT	REMARKS
55	FES	73+83.8 120.0 LT	123.18	(62) 122.00		
62	DMH	73+67.0 54.5 LT	129.11	(63) 125.36 (70) 122.50 (68) 126.88	122.50	
63	CBCI	73+70.0 47.8 LT	128.55		125.55	
68	CBCI	73+16.3 28.2 LT	130.32		127.32	
70	DMH	73+53.0 21.2 RT	129.84	(73) 126.95 (75) 124.77	122.86	5' DIA
73	CBCI	73+34.3 26.0 RT	130.15		127.15	
75	DMH	73+47.2 51.7 RT	130.50	(76) 125.51 (77) 125.51 (74) 125.10 (76A) 125.51	125.00	
76	CBCI	73+26.8 64.9 RT	129.86		126.86	
76A	CBCI	72+74.3 29.7 RT	131.82		128.96	
77	CBCI	73+58.7 95.4 RT	129.54		126.54	

LOWELL
THORNDIKE STREET
UTILITY PLANS
CATV ELEC GAS & TELE
SHEET 37 OF 212

CONSTRUCTION NOTES:

1. EXISTING AND PROPOSED ELECTRIC, TELEPHONE, CABLE AND GAS SURFACE FEATURES SHALL BE ADJUSTED TO FINISH GRADE BY THEIR RESPECTIVE UTILITY COMPANY. EXISTING AND PROPOSED DRAINAGE, SEWER AND WATER SURFACE FEATURES SHALL BE ADJUSTED TO FINISH GRADE BY THE CONTRACTOR.
2. EXISTING PIPE WITHIN PROPOSED ROADWAY PAVEMENT LOCATIONS SHALL BE FILLED WITH CONTROLLED DENSITY FILL AND ABANDONED UNLESS OTHERWISE NOTED.
3. EXISTING PIPE AND CONDUIT OUTSIDE PROPOSED ROADWAY PAVEMENT LOCATIONS SHALL BE PLUGGED AND ABANDONED IN PLACE.
4. SEE TRAFFIC PLANS FOR TRAFFIC SIGNAL EQUIPMENT DETAILS.

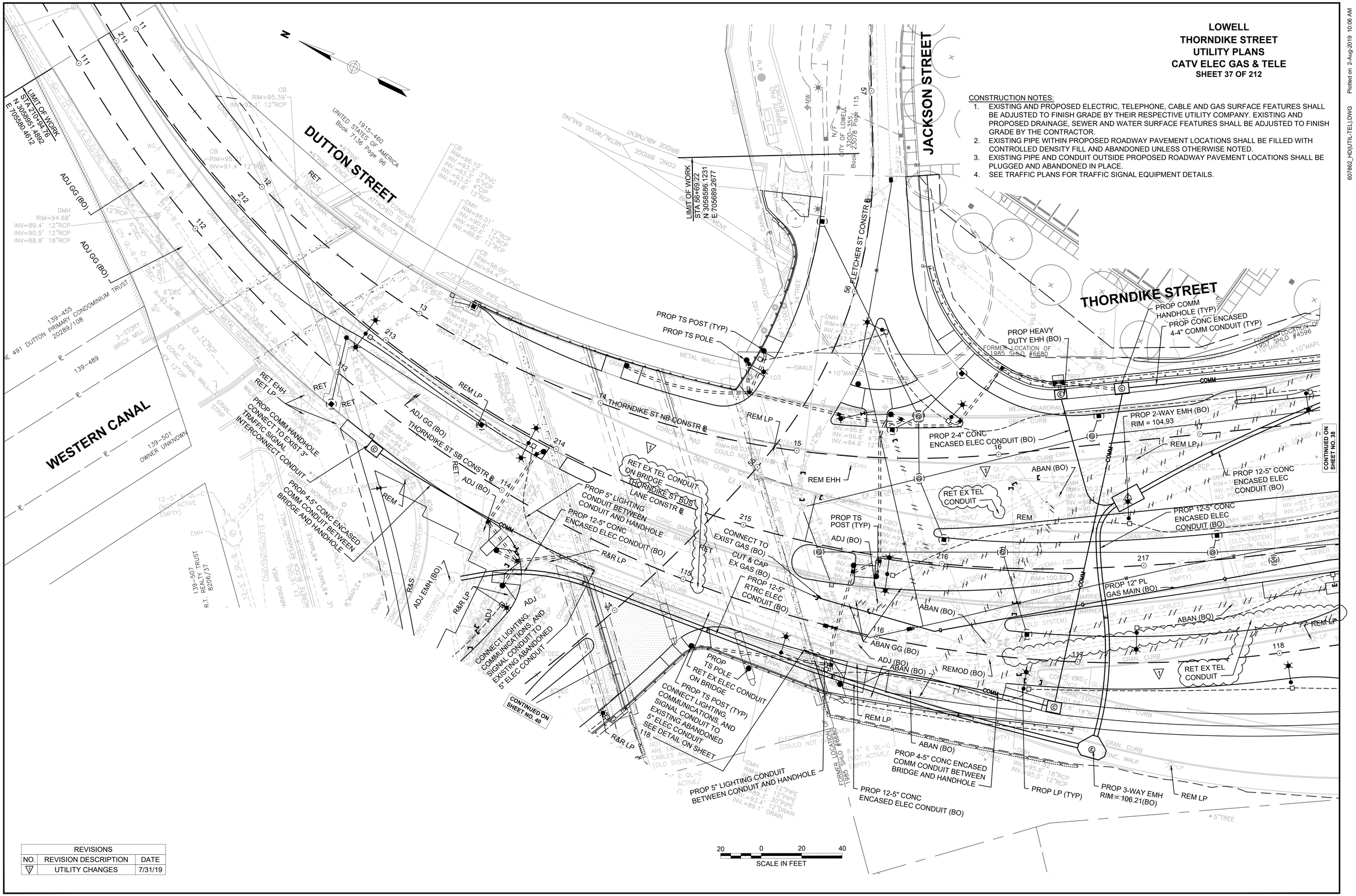

REVISIONS		
NO.	REVISION DESCRIPTION	DATE
7	UTILITY CHANGES	7/31/19

607862_HD(UTIL-TEL).DWG Plotted on 2-Aug-2019 10:06 AM

CONSTRUCTION NOTES:

1. EXISTING AND PROPOSED ELECTRIC, TELEPHONE, CABLE AND GAS SURFACE FEATURES SHALL BE ADJUSTED TO FINISH GRADE BY THEIR RESPECTIVE UTILITY COMPANY. EXISTING AND PROPOSED DRAINAGE, SEWER AND WATER SURFACE FEATURES SHALL BE ADJUSTED TO FINISH GRADE BY THE CONTRACTOR.
2. EXISTING PIPE WITHIN PROPOSED ROADWAY PAVEMENT LOCATIONS SHALL BE FILLED WITH CONTROLLED DENSITY FILL AND ABANDONED UNLESS OTHERWISE NOTED.
3. EXISTING PIPE AND CONDUIT OUTSIDE PROPOSED ROADWAY PAVEMENT LOCATIONS SHALL BE PLUGGED AND ABANDONED IN PLACE.
4. EXISTING TELEPHONE AND ELECTRIC CONDUIT WITHIN BAYS OF EXISTING BRIDGES TO BE ENCASED IN CONCRETE AND RETAINED IN PLACE DURING BRIDGE DEMO.
5. SEE TRAFFIC PLANS FOR TRAFFIC SIGNAL EQUIPMENT DETAILS.

REVISIONS		
NO.	REVISION DESCRIPTION	DATE
1	UTILITY CHANGES	7/31/19

LOWELL
THORNDIKE STREET
UTILITY PLANS
CATV ELEC GAS & TELE
SHEET 38 OF 212

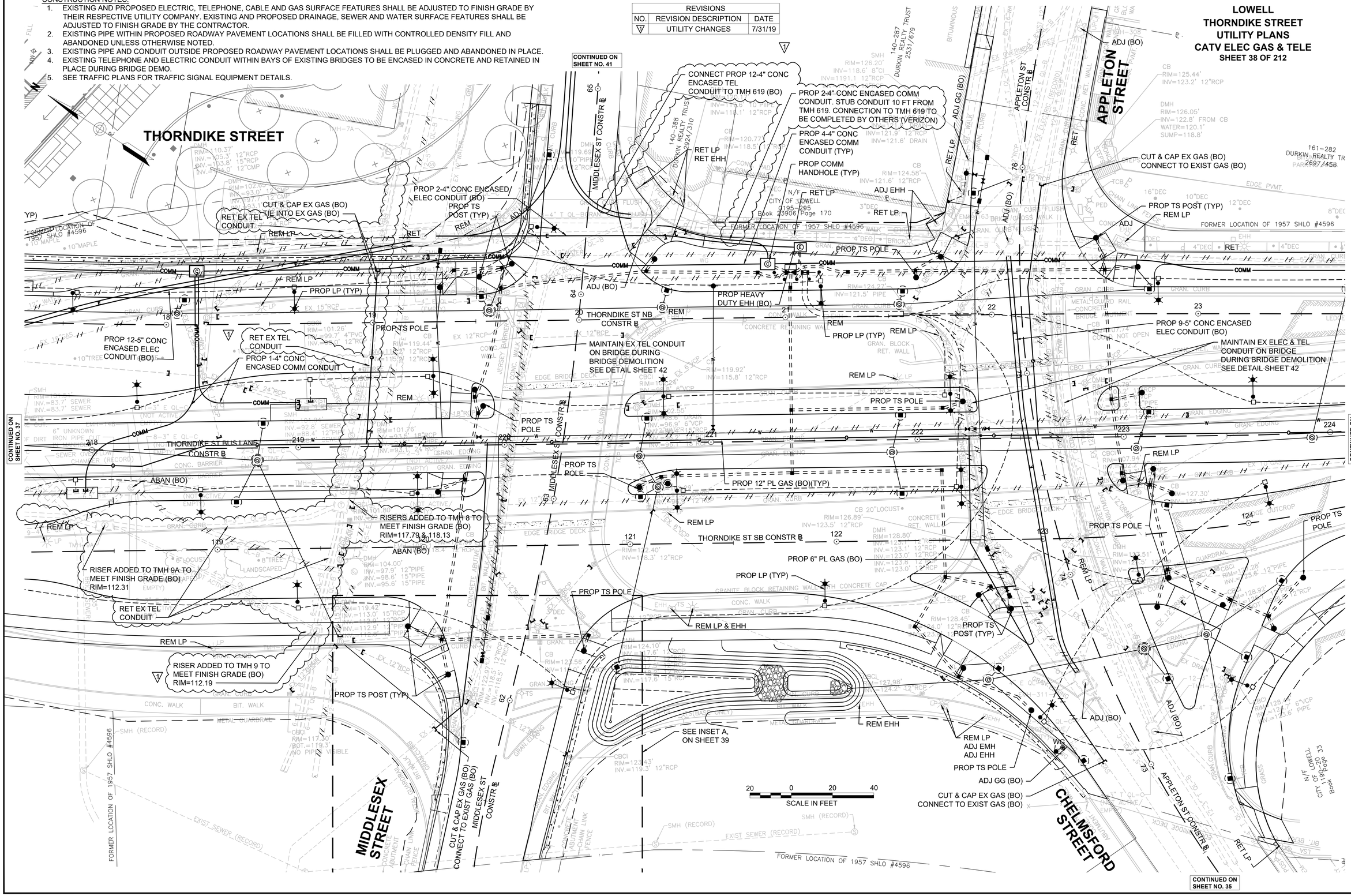

607862_HD(UTIL-TEL).DWG Plotted on 2-Aug-2019 10:07 AM