Lowell Regional Water Utility
227251.30
Residuals Handling Facilities Upgrade

Bidding Documents For Construction

IFB# 15-38

Project #227251.30
Lowell Regional Water Utility

September 2014

WOODARD &CURRAN

40 Shattuck Road | Suite 110
Andover, MA 01810
978-557-8150

woodardcurran.com
COMMITMENT & INTEGRITY DRIVE RESULTS

SECTION 00 01 07

SEALS PAGE

The engineering material and data contained in these Contract Documents were prepared under the supervision and direction of the undersigned, whose seal as a registered professional engineer is affixed below.

Robert S. Little, P.E.
Senior Project Manager
Woodard and Curran, Inc. (Engineer)

9/12/14
Date of Issue

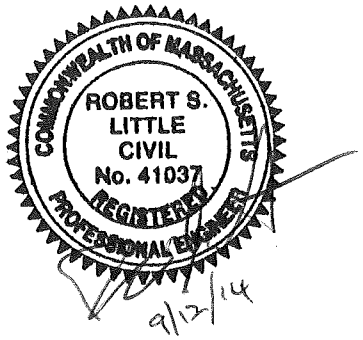

This page intentionally left blank

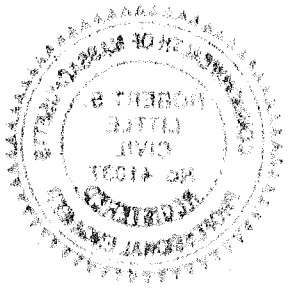

SECTION 00 01 10

TABLE OF CONTENTS

		TOTAL PAGES
DIVISION 00 PROCUREMENT AND CONTRACTING REQUIREMENTS		
INTRODUCTORY INFORMATION		
00 01 07	Seals Page	2
00 01 10	Table of Contents	4
00 01 15	List of Drawings	2
PROCUREMENT/BIDDING REQUIREMENTS		
00 11 16	Invitation to Bid	4
00 21 13	Instructions to Bidders	14
00 22 13	Supplementary Instructions to Bidders	10
00 31 00	Available Project Information	2
00 41 02	Form for General Bid	6
00 41 02.01	Annex to Form for General Bid	4
00 41 03.01	Form for Sub-Bid and Annex – Electrical	10
00 43 13	Bid Bond – Penal Sum Form	2
00 43 45	Exceptions and Deviations	2
00 43 93	General Bid Submittal Checklist	2
00 43 93.01	Sub-Bid Submittal Checklist	2
00 45 05	General Bidder's Representations and Certifications	4
00 45 05.01	Sub-Bidder's Representations and Certifications	4
00 45 19	Non-Collusion Affidavit	2
00 45 55	DCAMM General Contractor Update Statement	12
00 45 56	DCAMM Sub-Bidder Update Statement	12
CONTRACTING REQUIREMENTS		
00 51 00	Sample Notice of Award	4
00 52 10	Lowell Agreement Form	8
00 54 00	Lowell Agreement Form Supplements *Performance Bond Form (C-00 61 13.13)* *Payment Bond Form (C-00 61 13.16)*	8
00 55 00	Sample Notice to Proceed	2
00 60 00	Project Forms *Application for Payment Form (C-00 62 76)* *Request for Interpretation/Information Form (C-00 63 15)* *Field Order Form (C-00 63 36)* *Work Change Directive Form (C-00 63 49)* *Change Request Form (C- 00 63 60)* *Change Order Form (C-00 63 63)* *Notice of Substantial Completion Form (C-00 65 15)* *Certificate of Substantial Completion Form (C-00 65 16)* *Certificate of Completion Form (C-00 65 19)*	2

TOTAL
PAGES

DIVISION 00 PROCUREMENT AND CONTRACTING REQUIREMENTS (CONTINUED)

CONTRACTING REQUIREMENTS (CONTINUED)

00 72 05	Standard General Conditions of the Construction Contract (EJCDC C-700, 2007)	80
00 73 05	Supplementary Conditions	2
00 73 10	Specific Project Requirements	4
00 73 19	Health and Safety Criteria	2
00 73 36	Equal Employment Opportunity Requirements	2
00 73 43	Wage Rate Requirements	6
00 73 46	Wage Determination Schedule	2
00 73 73	Statutory Requirements	18

SPECIFICATIONS

DIVISION 01 GENERAL REQUIREMENTS

01 11 00	Summary of Work	2
01 11 20	Summary of Filed Sub-Bid Requirements	4
01 15 00	Specific Project Requirements and Procedures	6
01 15 00.01	Water Treatment Residuals Solids Information	2
01 15 00.02	MassDOT Document List	2
01 15 00.03	MassDEP (BUD) Approval Letter	8
01 15 00.04	Alpha Lagoon Sample Report	26
01 15 00.05	Department of Environmental Protection Permit Approval	6
01 15 30	Administrative Procedures and Quality Requirements	18
01 20 25	Measurement and Payment	4
01 50 00	Temporary Facilities and Controls	22
01 60 00	Product Requirements	6
01 70 00	Execution and Closeout Requirements	12

		TOTAL PAGES
DIVISION 03 - CONCRETE		
03 01 05	Concrete Repair	6
03 11 00	Concrete Forming	6
03 20 00	Concrete and Masonry Reinforcement	6
03 30 00	Cast-In-Place Concrete	8
03 30 53	Concrete Specialties	4
03 35 00	Concrete Placing, Curing, and Finishing	16
DIVISION 05 - METALS		
05 50 00	Metal Fabrications	6
DIVISION 09 - FINISHES		
09 90 00	Painting and Coating	16
DIVISION 26 – ELECTRICAL (FILED SUB-BID REQUIRED)		
26 05 00	Common Work Results for Electrical	14
26 05 19	Low-Voltage Electrical Power Conductors and Cables	8
26 05 26	Grounding and Bonding for Electrical Systems	6
26 05 34	Raceways, Boxes, and Supporting Devices	12
26 05 43	Underground Ducts and Raceways for Electrical Systems	14
26 27 00	Low-Voltage Distribution Equipment	4
26 27 26	Wiring Devices	8
26 28 16	Enclosed Switches and Circuit Breakers	8
26 29 13	Enclosed Controllers	8
26 29 23	Variable Frequency Motor Controllers	14
DIVISION 31 - EARTHWORK		
31 00 00	Earthwork	16
31 05 19	Geotextile Fabrics	6
31 10 00	Site Clearing	6
DIVISION 32 - EXTERIOR IMPROVEMENTS		
31 12 16	Asphalt Paving	4
32 90 00	Planting	4
DIVISION 33 - UTILITIES		
33 10 00	Water Utilities	12
33 39 00	Precast Utility Structures	
33 46 16.19	Pipe Underdrains	8

		TOTAL PAGES
DIVISION 40 - PROCESS INTEGRATION		
40 00 00	Basic Process Materials and Methods	16
40 05 13	Process Pipe and Fittings	24
40 05 14	Process Pipe Coupling and Connectors	20
40 05 15	Process Pipe Support	20
40 05 17	Process Pipe Sleeves and Seals	10
40 05 23	Process Valves and Strainers	44
40 05 59	Hydraulic Gates	14
40 90 00	Instrumentation and Control for Process Systems	6
40 91 00	Primary Process Measurement Devices	14
40 94 43	Programmable Logic Controllers	6
40 95 13	Process Control Panels and Hardware	14
DIVISION 43 - PROCESS GAS AND LIQUID HANDLING, PURIFICATION, AND STORAGE EQUIPMENT		
43 21 00	Vertical Turbine Pumps	14
43 21 40	Submersible Pump	12

END OF SECTION

SECTION 00 01 15

LIST OF DRAWINGS

DRAWING NUMBER	DRAWING TITLE
G-000	Title Sheet
G-001	Sheet Index, General Notes, Legend, and Abbreviations
C-100	Existing Site Plan
C-101	Proposed Site Plan
C-500	Civil Details 1
C-501	Civil Details 2
C-502	Civil Details 3
S-001	Structural Notes and Details
S-100	Decant Structure Details
M-100	Recycle Pump Station Demolition Plan and Section
M-101	Recycle Pump Station Mechanical Plan and Section
E-001	Electrical Legend
E-005	Electrical Site Plan
E-010	Electrical On-line Wiring Diagram
E-015	Recycle Pump Station Electrical Demolition and New Plans
E-100	Electrical Details
E-101	Electrical Details
I-200	SCADA Panel Title Sheet
I-201	SCADA Panel Legend & Notes
I-202	SCADA Panel Bill of Material
I-203	SCADA Panel Equipment Layout
I-204	SCADA Panel Terminal Block Layout
I-205	SCADA Panel Power Distribution
I-206	SCADA Panel Communications
I-207	SCADA Panel PLC Base-Digital Inputs & Relay Outputs
I-208	SCADA Panel PLC Expansion Modules Digital & Analog Inputs
I-209	SCADA Panel PLC Expansion Modules Analog Outputs

END OF SECTION

This page intentionally left blank

SECTION 00 11 16

INVITATION TO BID

The City of Lowell (Owner) and the Lowell Regional Water Utility invite Bidders to submit sealed Bids for Residuals Handling Facilities Upgrade IFB# 15-38, which includes, but is not limited to all civil, mechanical, process, instrumentation and electrical work required for upgrades to the residuals handling facilities. Work includes, but is not limited to, replacement of backwash recycle pumps, removal of water treatment residual solids from lagoons, and installation of an underdrain system and decant weirs in the lagoons and yard piping. Also included is earthwork, paving, surface restoration, erosion control, traffic control, appurtenances; and all materials, equipment, services and construction inherent to the Work as specified in the Contract Documents.

The Work shall be substantially complete within 280 calendar days from the commencement of Contract Time and completed and ready for final payment 315 calendar days from the commencement of Contract Time.

The Project being bid is subject to Massachusetts General Laws, Chapter 149, Sections 44A-J.

Sealed Sub-Bids are required for the following classes of Work: electrical work.

General Bidders must be certified by the Commonwealth of Massachusetts Division of Capital Asset Management and Maintenance (DCAMM) for **Sewage and Water Treatment Plants.** Sub-Bidders must be DCAMM certified for their respective class of Work.

A mandatory pre Bid conference will be held at 10:00 AM local time on September 25, 2014 at 815 Pawtucket Blvd, Lowell, MA 01854. All prospective Bidders are required to attend the pre-bid meeting. Bids will not be accepted from Bidders that do not attend the pre-bid meeting.

Sub-Bids will be received until 11:00 AM local time on October 1, 2014 at City of Lowell Purchasing Department, City Hall, 375 Merrimack Street, Lowell, MA 01852, Attention: Mr. P. Michael Vaughn, Chief Procurement Officer. Sub-Bids filed will then and there be publicly opened and read aloud. Sub-Bids received after the time of announced opening will not be accepted.

General Bids will then be received until 11:00 AM local time on October 8, 2014 at City of Lowell Purchasing Department, City Hall, 375 Merrimack Street, Lowell, MA 01852, Attention: Mr. P. Michael Vaughn, Chief Procurement Officer. General Bids will then and there be publicly opened and read aloud. General Bids received after the time of announced opening will not be accepted.

General Bidders must submit the DCAMM Prime/General Certificate of Contractor Eligibility and the DCAMM Prime/General Contractor Update Statement. Sub-Bidders must submit the DCAMM Filed Sub-Bid Certificate of Contractor Eligibility and the DCAMM Sub-Bidder Update Statement. Any Bid submitted without the appropriate Certificate of Eligibility and Update Statement shall be considered invalid.

Sets of Bidding Documents may be examined at the following location(s) on or after September 17, 2014.

Issuing Office:
City of Lowell Purchasing Department
City Hall
375 Merrimack Street
Lowell, MA 01852
Attention: Mr. P. Michael Vaughn, Chief Procurement Officer
Phone: (978)-674-4110

Sets of Bidding Documents may be obtained on or after September 17, 2014.

in electronic format at no cost by registering on the City of Lowell website.

http://www.lowellma.gov/purchasing

Bidding documents can be found by clicking "Open Solicitations" under the Department Facts tab on the left hand side.

in hardcopy from Issuing Office on or after September 17, 2014, at 12:00 PM (noon) for a refundable deposit for each set of Bidding Documents of $100.00 payable by certified check, treasurer's or cashier's check, or money order to City of Lowell, which deposit will be refunded to each document holder of record who returns a complete set of Bidding Documents in good and reusable condition within 45 days after opening of General Bids. The deposit will be forfeited if the documents are not returned within the specified time period and in good and reusable condition.

Bidding Documents are available by delivery service by providing a prepaid Federal Express, UPS, or other courier account number for delivery.

Complete sets of Bidding Documents shall be used in preparing Bids; neither Owner nor Engineer assumes any responsibility for errors or misinterpretations resulting from the use of the incomplete sets of Bidding Documents or for modifications to the Bidding Documents including electronic conversion.

Bid security in the amount of 5 percent of the prices bid must accompany each General Bid and each Sub-Bid in accordance with the Instructions to Bidders.

Minimum wage rates as issued by the Executive Office of Labor and of Workforce Development, Department of Labor Standards under the provisions of Massachusetts General Laws, Chapter 149, Sections 26 to 27D inclusive, as amended, apply to this Project. It is the responsibility of the Bidders, before Bid opening, to request if necessary, any additional information on Minimum Wage Rates for those trades people who may be employed for the proposed Work under the resulting Contract.

Owner reserves the right to reject any or all Bids, including without limitation, nonconforming, nonresponsive, unbalanced, or conditional Bids. Owner further reserves the right to reject the Bid of any Bidder whom it finds, after reasonable inquiry and evaluation, to not be eligible or responsible. Owner may also reject the Bid of any Bidder if Owner believes that it would not be in the best interest of the Project or the public to make an award to that Bidder. Owner also reserves the right to waive all informalities not involving price, time, or changes in the Work and to negotiate contract terms with the Successful Bidder.

END OF SECTION

This page intentionally left blank

SECTION 00 21 13
INSTRUCTIONS TO BIDDERS FOR CONSTRUCTION CONTRACTS

Based on that prepared by

ENGINEERS JOINT CONTRACT DOCUMENTS COMMITTEE

and

Issued and Published Jointly by

ACEC
American Council of Engineering Companies

The Associated General Contractors of America — Skill, Responsibility, Integrity

ASCE American Society of Civil Engineers

National Society of Professional Engineers
Professional Engineers in Private Practice

AMERICAN COUNCIL OF ENGINEERING COMPANIES

ASSOCIATED GENERAL CONTRACTORS OF AMERICA

AMERICAN SOCIETY OF CIVIL ENGINEERS

PROFESSIONAL ENGINEERS IN PRIVATE PRACTICE
A Practice Division of the
NATIONAL SOCIETY OF PROFESSIONAL ENGINEERS

Endorsed by

CSI

CONSTRUCTION SPECIFICATIONS INSTITUTE

Copyright © 2007 National Society of Professional Engineers for EJCDC. All rights reserved.

Copyright © 2007 National Society of Professional Engineers
1420 King Street, Alexandria, VA 22314-2794
(703) 684-2882
www.nspe.org

American Council of Engineering Companies
1015 15th Street N.W., Washington, DC 20005
(202) 347-7474
www.acec.org

American Society of Civil Engineers
1801 Alexander Bell Drive, Reston, VA 20191-4400
(800) 548-2723
www.asce.org

Associated General Contractors of America
2300 Wilson Boulevard, Suite 400, Arlington, VA 22201-3308
(703) 548-3118
www.agc.org

The copyright for this EJCDC document is owned jointly by the four EJCDC sponsoring organizations and held in trust for their benefit by NSPE.

ARTICLE 1 – DEFINED TERMS

1.01 Terms used in these Instructions to Bidders have the meanings indicated in the Standard General and Supplementary Conditions, if any. Additional terms used in these Instructions to Bidders have the meanings indicated below and as may be included in the Supplementary Instructions to Bidders:

A. *Issuing Office* – The office from which the Bidding Documents are to be issued and where the bidding procedures are to be administered identified in the Invitation to Bid.

B. *Supplements* – Those portions of the Bidding Requirements to be submitted with and made a condition of a Bid including required submittals.

C. *Notice of Intent to Award* – The written notice to the Successful Bidder indicating, conditions precedent to receiving a Notice of Award and Agreement for execution.

ARTICLE 2 – COPIES OF BIDDING DOCUMENTS

2.01 Sets of Bidding Documents may be examined and obtained as stated in the Invitation to Bid.

2.02 Complete sets of Bidding Documents shall be used in preparing Bids; neither Owner nor Engineer assumes any responsibility for errors or misinterpretations resulting from the use of incomplete sets of Bidding Documents, Bidding Documents provided by third parties, or for modifications to the Bidding Documents not made by official Addenda, including electronic conversion.

2.03 Owner and Engineer, in making copies of Bidding Documents available on the above terms, do so only for the purpose of obtaining Bids for the Work and do not authorize or confer a license for any other use.

ARTICLE 3 – QUALIFICATIONS OF BIDDERS

3.01 To demonstrate Bidder's qualifications to perform the Work, Bidder shall submit written evidence such as financial data, previous experience, present commitments, and such other data requested in the Bidding Documents, and within the time frames stipulated upon Owner's request.

3.02 Bidders shall meet minimum criteria regarding experience and qualifications set forth in the General Requirements and the Specifications.

ARTICLE 4 – EXAMINATION OF BIDDING DOCUMENTS, OTHER RELATED DATA, AND SITE

4.01 *Subsurface and Physical Conditions*

A. Section 00 73 10 of the Supplementary Conditions identifies:

1. those reports known to Owner of explorations and tests of subsurface conditions at or contiguous to the Site; and

2. those drawings known to Owner of physical conditions relating to existing surface or subsurface structures at the Site (except Underground Facilities).

B. Copies of reports and drawings referenced in Section 00 73 10, if any, are included in the Bidding Documents as indicated in Section 00 31 00, if included. Those reports and drawings are not part of the Contract Documents, but the "technical data" contained therein upon which Bidder is entitled to rely as provided in Paragraph 4.02 of the Standard General Conditions, has been identified and established in Section 00 73 10 of the Supplementary Conditions.

C. Bidder is responsible for any interpretation or conclusion Bidder draws from any "technical data" or any other data, interpretations, opinions, or information contained in such reports or shown or indicated in such drawings.

4.02 *Underground Facilities*

A. Information and data shown or indicated in the Bidding Documents with respect to existing Underground Facilities at or contiguous to the Site is based upon information and data furnished to Owner and Engineer by owners of such Underground Facilities, including Owner, or others.

4.03 *Hazardous Environmental Condition*

A. Section 00 73 10 of the Supplementary Conditions identifies any reports and drawings known to Owner relating to a Hazardous Environmental Condition identified at the Site.

B. Copies of reports and drawings referenced in Section 00 73 10, if any, are included in the Bidding Documents as indicated in Section 00 31 00 if included. Those reports and drawings are not part of the Contract Documents, but the "technical data" contained therein upon which Bidder is entitled to rely as provided in Paragraph 4.06 of the Standard General Conditions has been identified and established in Section 00 73 10 of the Supplementary Conditions.

C. Bidder is responsible for any interpretation or conclusion Bidder draws from any "technical data" or any other data, interpretations, opinions, or information contained in such reports or shown or indicated in such drawings.

4.04 Provisions concerning responsibilities for the adequacy of data furnished to prospective Bidders with respect to subsurface conditions, other physical conditions, and Underground Facilities, and possible changes in the Bidding Documents due to differing or unanticipated subsurface or physical conditions appear in Paragraphs 4.02, 4.03, and 4.04 of the Standard General Conditions and Section 00 73 10 of the Supplementary Conditions. Provisions concerning responsibilities for the adequacy of data furnished to prospective Bidders with respect to a Hazardous Environmental Condition at the Site, if

any, and possible changes in the Contract Documents due to any Hazardous Environmental Condition uncovered or revealed at the Site which was not shown or indicated in the Drawings or Specifications or identified in the Contract Documents to be within the scope of the Work, appear in Paragraph 4.06 of the Standard General Conditions Section 00 73 10 of the Supplementary Conditions.

4.05 Upon request, Owner may provide Bidder access to the Site to conduct such examinations, investigations, explorations, tests, and studies as Bidder deems necessary for submission of a Bid. Bidder shall be responsible for obtaining permission and necessary permits and insurance for access to the Site. Bidder shall clean up and restore the Site to its former condition upon completion of any such explorations, investigations, tests, and studies. Bidder shall comply with all applicable Laws and Regulations relative to excavation and utility locates.

4.06 Reference is made to Article 7 of the Standard General Conditions and Section 00 73 10 of the Supplementary Conditions for the identification of the general nature of other work that is to be performed at the Site by Owner or others (such as utilities and other prime contractors) that relates to the Work contemplated by these Bidding Documents. On request, Owner will provide to each Bidder for examination access to or copies of contract documents (other than portions thereof related to price) for such other work.

4.07 It is the responsibility of each Bidder before submitting a Bid to:

A. examine and carefully study the Bidding Documents, and the other related data identified in the Bidding Documents;

B. visit the Site and become familiar with and satisfy Bidder as to the general, local, and Site conditions that may affect cost, progress, and performance of the Work;

C. become familiar with and satisfy Bidder as to all federal, state, and local Laws and Regulations that may affect cost, progress, and performance of the Work;

D. carefully study all: (1) reports of explorations and tests of subsurface conditions at or contiguous to the Site and all drawings of physical conditions relating to existing surface or subsurface structures at the Site (except Underground Facilities) that have been identified in Section 00 73 10, as containing reliable "technical data," and (2) reports and drawings of Hazardous Environmental Conditions, if any, at the Site that have been identified in Section 00 73 10, as containing reliable "technical data";

E. consider the information known to Bidder; information commonly known to contractors doing business in the locality of the Site; information and observations obtained from visits to the Site; the Bidding Documents; and the Site-related reports and drawings identified in the Bidding Documents, with respect to the effect of such information, observations, and documents on (1) the cost, progress, and performance of the Work; (2) the means, methods, techniques, sequences, and procedures of construction to be employed by Bidder, including applying any specific means, methods, techniques, sequences, and procedures of construction

expressly required by the Bidding Documents; and (3) Bidder's safety precautions and programs;

F. agree at the time of submitting its Bid that no further examinations, investigations, explorations, tests, studies, or data are necessary for the determination of its Bid for performance of the Work at the price(s) bid and within the times required, and in accordance with the other terms and conditions of the Bidding Documents;

G. become aware of the general nature of the work to be performed by Owner and others at the Site that relates to the Work as indicated in the Bidding Documents;

H. correlate the information known to Bidder, information and observations obtained from visits to the Site, reports and drawings identified in the Bidding Documents, and all additional examinations, investigations, explorations, tests, studies, and data with the Bidding Documents;

I. promptly give Engineer written notice of all conflicts, errors, ambiguities, or discrepancies that Bidder discovers in the Bidding Documents and confirm that the written resolution thereof by Engineer is acceptable to Bidder; and

J. determine that the Bidding Documents are generally sufficient to indicate and convey understanding of all terms and conditions for the performance of the Work.

4.08 The submission of a Bid will constitute an incontrovertible representation by Bidder that Bidder has complied with every requirement of this Article 4, that without exception the Bid is premised upon performing and furnishing the Work required by the Bidding Documents and applying any specific means, methods, techniques, sequences, and procedures of construction that may be shown or indicated or expressly required by the Bidding Documents, that Bidder has given Engineer written notice of all conflicts, errors, ambiguities, and discrepancies that Bidder has discovered in the Bidding Documents and the written resolutions thereof by Engineer are acceptable to Bidder, and that the Bidding Documents are generally sufficient to indicate and convey understanding of all terms and conditions for performing and furnishing the Work.

ARTICLE 5 – PRE-BID CONFERENCE

5.01 A mandatory pre bid conference will be held at the time, date and location as indicated in the Invitation to Bid. Bidders are required to attend and participate in the conference.

5.02 Addenda will be transmitted to all prospective Bidders of record considered necessary in response to questions arising at the conference. Oral statements may not be relied upon and will not be binding or legally effective.

ARTICLE 6 – SITE AND OTHER AREAS

6.01 The Site is identified in the Bidding Documents. Easements for permanent structures or permanent changes in existing facilities are to be obtained and paid for by Owner unless otherwise provided in the Bidding Documents. All additional lands and access thereto

required for temporary construction facilities, construction equipment, or storage of materials and equipment to be incorporated in the Work are to be obtained and paid for by Contractor.

ARTICLE 7 – INTERPRETATIONS AND ADDENDA

7.01 All questions about the meaning or intent of the Bidding Documents are to be submitted to the Owner in writing as follows. Submission of questions via email is acceptable.

City of Lowell Purchasing Department
City Hall
375 Merrimack Street
Lowell, MA 01852
Attention: Mr. P. Michael Vaughn, Chief Procurement Officer
Fax: 978-970-4114
Email: pmvaughn@lowellma.gov

7.02 Interpretations or clarifications considered necessary by Engineer in response to such questions will be issued by Addenda mailed or delivered to all parties recorded by Owner as having received the Bidding Documents. Questions received less than 5 days prior to the date for opening of Bids will not be answered. Only answers in the Addenda will be binding. Oral statements, interpretations, and clarifications may not be relied upon and will not be binding or legally effective.

7.03 Addenda may be issued to clarify, correct, or change the Bidding Documents as deemed advisable by Owner or Engineer, will be available for examination at the Issuing Office and will be mailed or delivered to all parties recorded by Engineer as having received the Bidding Documents.

ARTICLE 8 – BID SECURITY

8.01 A Bid must be accompanied by Bid security made payable to Owner in an amount of 5 percent of Bidder's maximum Bid price and in the form of a certified check, treasurer's or cashier's check, or money order, or a Bid bond on or consistent with the form included in the Bidding Documents in Section 00 43 13 issued by a surety meeting the requirements of Paragraphs 5.01 and 5.02 of the Standard General and Supplementary Conditions, if any.

8.02 The Bid security of the Successful Bidder will be retained until such Bidder has furnished the required contract security, met the conditions of the Notice of Intent to Award (if any) and Notice of Award, and executed the Agreement, whereupon the Bid security will be returned. If the Successful Bidder fails to comply with the conditions set forth in the Notice of Intent to Award (if any) and Notice of Award within the time specified therein, Owner may consider Bidder to be in default, annul the Notice of Award, and the Bid security of that Bidder will be forfeited. Such forfeiture shall be Owner's exclusive remedy if Bidder defaults. The Bid security of other Bidders whom Owner believes to have a reasonable chance of receiving the award may be retained by Owner until the earlier of 7 days after the Effective Date of the Agreement or 61 days after the Bid

opening, whereupon Bid security furnished by such Bidders will be returned. See Supplementary Instructions to Bidders (if any) for additional information.

8.03 Bid security of other Bidders whom Owner believes do not have a reasonable chance of receiving the award will be returned within 5 days after the Bid opening.

ARTICLE 9 – CONTRACT TIMES

9.01 The number of days within which, or the dates by which, the Work is to be substantially completed and ready for final payment are set forth in the Agreement.

ARTICLE 10 – LIQUIDATED DAMAGES

10.01 Provisions for liquidated damages, if any, are set forth in the Agreement.

ARTICLE 11 – SUBSTITUTE AND "OR-EQUAL" ITEMS

11.01 The Contract, if awarded, will be on the basis of materials and equipment specified or described in the Bidding Documents, or those substitute or "or-equal" materials and equipment as defined in Paragraph 6.05 of the General and Supplementary Conditions, approved by Engineer and identified by Addendum.

A. The materials and equipment described in the Bidding Documents establish a standard of required type, function and quality to be met by any proposed substitute or "or-equal" item. No item of material or equipment will be considered by Engineer as a substitute or "or-equal" item unless written request for approval has been submitted by Bidder and has been received by Engineer at least 15 days prior to the date for receipt of Bids.

B. Each such request shall conform to the requirements of Paragraph 6.05 of the General and Supplementary Conditions.

11.02 The burden of proof of the merit of the proposed item is upon the Bidder. Engineer's decision of approval or disapproval of a proposed item will be final. If Engineer approves any proposed item, such approval will be set forth in an Addendum issued to all prospective Bidders. Bidders shall not rely upon approvals made in any other manner.

ARTICLE 12 – SUBCONTRACTORS, SUPPLIERS AND OTHERS

12.01 The Bidding Documents may require the identity of certain Subcontractors, Suppliers, individuals, or entities to be submitted to Owner with the Bid.

12.02 As required in the Bidding Documents, or within 5 days after Bid opening if requested by Owner, Bidder shall submit a listing and experience statement with pertinent information regarding similar projects and other evidence of qualification for each Subcontractor, Supplier, individual, or entity. If Owner or Engineer, after due investigation, has reasonable objection to any proposed Subcontractor, Supplier, individual, or entity,

Owner may, before the Notice of Award is given, request apparent Successful Bidder to submit a substitute without an increase in the Bid.

12.03 If apparent Successful Bidder declines to make any such substitution, Owner may award the Contract to the next lowest responsible Bidder that proposes to use acceptable Subcontractors, Suppliers, individuals, or entities. Declining to make requested substitutions will not constitute grounds for forfeiture of the Bid security of any Bidder. Any Subcontractor, Supplier, individual, or entity so listed and against which Owner or Engineer makes no written objection prior to the giving of the Notice of Award will be deemed acceptable to Owner and Engineer subject to revocation of such acceptance after the Effective Date of the Agreement as provided in Paragraph 6.06 of the Standard General and Supplementary Conditions, if any.

12.04 Contractor shall not be required to employ any Subcontractor, Supplier, individual, or entity against whom Contractor has reasonable objection.

ARTICLE 13 – PREPARATION OF BID

13.01 The Bid Form and Supplements are included with the Bidding Documents.

13.02 Bids are to be submitted as indicated in the Bid Form. All blanks on the Bid Form shall be completed in ink or typewritten and the Bid Form signed in ink. Erasures or alterations shall be initialed in ink by the person signing the Bid Form.

13.03 A Bid by a corporation shall be executed in the corporate name by the president or a vice-president or other corporate officer accompanied by evidence of authority to sign. The corporate seal shall be affixed and attested by the secretary or an assistant secretary. The corporate address and state of incorporation shall be shown.

13.04 A Bid by a partnership shall be executed in the partnership name and signed by a partner (whose title must appear under the signature), accompanied by evidence of authority to sign. The official address of the partnership shall be shown.

13.05 A Bid by a limited liability company shall be executed in the name of the firm by a member and accompanied by evidence of authority to sign. The state of formation of the firm and the official address of the firm shall be shown.

13.06 A Bid by an individual shall show the Bidder's name and official address.

13.07 A Bid by a joint venture shall be executed by each joint venturer in the manner indicated on the Bid Form. The official address of the joint venture shall be shown.

13.08 All names shall be printed in ink below the signatures.

13.09 The Bid shall contain an acknowledgment of receipt of all Addenda, the numbers of which shall be filled in on the Bid Form.

13.10 Postal and e-mail addresses and telephone numbers for communications regarding the Bid shall be shown.

13.11 The Bid shall contain evidence of Bidder's authority and qualification to do business in the state where the Project is located, or Bidder shall covenant in writing to obtain such authority and qualification prior to award of the Contract and attach such covenant to the Bid. Bidder's state contractor license number, if any, shall also be shown on the Bid Form. See Supplementary Instructions to Bidders for additional requirements, if any.

13.12 Bidders are advised to carefully review those portions of the Bid Form and Supplements requiring Bidder's representations and certifications that are to be submitted with a Bid or subsequent to the Bid opening, and made a condition of the Bid.

13.13 Deviations from and exceptions to the Bidding Documents must be summarized and fully explained in Section 00 43 45 of the Bidding Documents. Bids that do not comply with the requirements of Section 00 43 45 may be considered non responsive and may be rejected at the discretion of the Owner.

A. Any substitute or "or-equal" items to be submitted for consideration prior to receipt of Bids must also be identified and requests for consideration shall be submitted in accordance with Article 11 above.

ARTICLE 14 – BASIS OF BID; COMPARISON OF BIDS

14.01 *Bid Pricing*

A. Bidders shall submit a Bid on a lump sum and unit price basis as provided for in the Bid Form. Bid prices shall be stated in both words and figures.

B. The total of all prices will be the sum of the products of the estimated quantity of each item and the corresponding unit price plus the lump sum amount. The final quantities for unit priced items and Contract Price will be determined in accordance with Paragraph 11.03 of the Standard General and Supplementary Conditions, if any.

C. Discrepancies between prices written in words and prices written in figures will be resolved in favor of prices written in words. Discrepancies between the multiplication of units of Work and unit prices will be resolved in favor of the unit prices. Discrepancies between the indicated sum of any column of figures and the correct sum thereof will be resolved in favor of the correct sum.

14.02 *Deviations and Exceptions*

A. The Bid Price will be adjusted for exceptions taken to the days or dates established in the Agreement based upon the rates established for liquidated damages in the Agreement, or other reasonable basis and for other exceptions and deviations that may be considered by Owner based on prices provided by Bidders in 00 43 45.

ARTICLE 15 – SUBMITTAL OF BID

15.01 With each copy of the Bidding Documents, a Bidder is furnished a copy of the Bid Form, the Bid Security Form and Supplements. An original signed hard copy of the Bid Form, the original of the Bid security, Supplements (as listed in the Bid Submittal Checklist), and the Bid Submittal Checklist are to be completed and submitted.

15.02 A Bid shall be submitted no later than the date and time prescribed and at the place indicated in the Invitation to Bid and shall be enclosed in a plainly marked package with the Project title, the name and address of Bidder, and shall be accompanied by the Bid security and other required documents.

15.03 If a Bid is sent by mail or other delivery system, the sealed envelope containing the Bid shall be enclosed in a separate package plainly marked on the outside with the notation "BID ENCLOSED." **A Bid sent by mail or courier shall be addressed to Owner at the City of Lowell Purchasing Department, City Hall, 375 Merrimack Street, Lowell, MA 01852, Attention: Mr. P. Michael Vaughn, Chief Procurement Officer, Phone: (978)-674-4110.**

15.04 Bidders shall be responsible to confirm the ability of overnight mailing or courier services to deliver to the Owner's offices.

ARTICLE 16 – MODIFICATION AND WITHDRAWAL OF BID

16.01 A Bid may be modified or withdrawn by an appropriate document duly executed in the same manner that a Bid must be executed and delivered to the place where Bids are to be submitted prior to the date and time for the opening of Bids.

16.02 If within 24 hours after Bids are opened any Bidder files a duly signed written notice with Owner and promptly thereafter demonstrates to the reasonable satisfaction of Owner that there was a material and substantial mistake in the preparation of its Bid, that Bidder may withdraw its Bid, and the Bid security will be returned. Thereafter, if the Work is re-Bid, that Bidder will be disqualified from submitting a Bid on the Work.

ARTICLE 17 – OPENING OF BIDS

17.01 Bids will be opened at the time and place indicated in the Invitation to Bid and, unless obviously non-responsive, read aloud publicly.

ARTICLE 18 – BIDS TO REMAIN SUBJECT TO ACCEPTANCE

18.01 All Bids will remain subject to acceptance for the period of time stated in the Bid Form, but Owner may, in its sole discretion, release any Bid and return the Bid security prior to the end of this period.

ARTICLE 19 – EVALUATION OF BIDS

19.01 More than one Bid for the same Work from an individual or entity under the same or different names will not be considered. Reasonable grounds for believing that any Bidder has an interest in more than one Bid for the Work may be cause for disqualification of that Bidder and the rejection of all Bids in which that Bidder has an interest.

19.02 In evaluating Bids, Owner will consider whether or not the Bids comply with the prescribed requirements, and such alternates, unit prices and other data as may be requested in the Bid Form or prior to the Notice of Award.

19.03 In evaluating Bidders, Owner will consider the qualifications of Bidders and may consider the qualifications and experience of Subcontractors, Suppliers, and other individuals or entities proposed for those portions of the Work for which the identity of Subcontractors, Suppliers, and other individuals or entities are submitted.

19.04 Owner may also consider the operating costs, maintenance requirements, performance data and guarantees of major items of materials and equipment proposed for incorporation in the Work when such data is required to be submitted prior to the Notice of Award.

19.05 Owner may conduct such investigations as Owner deems necessary to establish the responsibility, qualifications, and financial ability of Bidders, proposed Subcontractors, Suppliers, individuals, or entities proposed for those portions of the Work in accordance with the Contract Documents.

19.06 Owner may conduct reference checks for the projects listed by the Bidder. Poor references may be a basis for deeming Bidder as not responsible. Reference questions will include, but are not limited to, product quality and durability, overall work quality, performance, timely delivery/completion, customer service, and general customer satisfaction.

19.07 Deviations and exceptions set forth in Section 00 43 45 may be rejected or accepted unilaterally by Owner its sole discretion. Exceptions which are general, which make reference to Bidder's standard terms and conditions, which are a wholesale substitution of the terms and conditions of the Bidding Documents, or which make reference to Bidder's descriptive information as a whole are not acceptable.

19.08 Owner reserves the right to reject any or all Bids, including without limitation, nonconforming, nonresponsive, unbalanced, or conditional Bids. Owner further reserves the right to reject the Bid of any Bidder whom it finds, after reasonable inquiry and evaluation, to not be responsible or eligible or does not meet the specified qualification or quality requirements, based on poor references or otherwise. Owner may also reject the Bid of any Bidder if Owner believes that it would not be in the best interest of the Project or public to make an award to that Bidder. Owner also reserves the right to waive all informalities not involving price, time, or changes in the Work and to negotiate Contract terms with the Successful Bidder.

19.09 Additional statutory requirements, if any, are included in the Supplementary Instructions to Bidders.

ARTICLE 20 – AWARD OF CONTRACT

20.01 If the Contract is to be awarded, Owner may award the Contract to the responsive, responsible, and eligible Bidder, offering the lowest price for the Bid and whose Bid is in the best interests of the Project or public.

ARTICLE 21 – CONTRACT SECURITY AND INSURANCE

21.01 Article 5 of the Standard General and Supplementary Conditions, if any, set forth Owner's requirements as to performance and payment bonds and insurance. The Successful Bidder shall deliver such bonds and evidence of insurance coverage within 10 days of receipt of the Notice of Award.

ARTICLE 22 – SIGNING OF AGREEMENT

22.01 The Owner will issue a Notice Award to the Successful Bidder in the form included in Bidding Documents. Within 10 days of receipt of the Notice of Award, the Successful Bidder shall comply with the conditions precedent and provide requested information. Based on required reviews and approvals, Owner will thereafter provide the required number of counterparts of the Agreement and other Contract Documents which are identified in the Agreement. The Successful Bidder shall sign and deliver the required number of counterparts of the Agreement and other Contract Documents to Owner within the time specified by the Owner. After obtaining required reviews and approvals for Contract execution, Owner shall return one fully signed counterpart the Agreement and other Contract Documents.

ARTICLE 23 – RETAINAGE

23.01 Provisions concerning retainage are set forth in the Agreement.

ARTICLE 24 – EQUAL EMPLOYMENT OPPORTUNITY, ANTI-DISCRIMINATION, AND AFFIRMATIVE ACTION

24.01 Provisions regarding the requirements for equal employment opportunity, anti-discrimination, and affirmative action programs are set forth in Section 00 73 36 of the Supplementary Conditions.

ARTICLE 25 – CONTRACTOR'S WARRANTY AND GUARANTEES; CORRECTION PERIOD

25.01 Provisions concerning Contractor's general warranty and guarantees and correction period are set forth in Articles 6.19, 13.06, and 13.07 of the Standard General and Supplementary Conditions, if any.

ARTICLE 26 – SAFETY AND HEALTH REGULATIONS

26.01 This Project is subject to the Safety and Health Regulations of the U.S. Department of Labor set forth in Title 29 CFR, Part 1926 and to all subsequent amendments and other requirements identified in Section 00 73 19 of the Supplementary Conditions.

ARTICLE 27 – SUPPLEMENTARY INSTRUCTIONS TO BIDDERS

27.01 Supplementary Instructions to Bidders, if any, are included in Section 00 22 13 and may include certain provisions required by Laws and Regulations and funding agencies. Bidders are solely responsible to determine, obtain, review and interpret the full text of applicable Laws and Regulations.

END OF SECTION

SECTION 00 22 13

SUPPLEMENTARY INSTRUCTIONS TO BIDDERS

The following supplement or modify the Instructions to Bidders pursuant to Article 27 therein. This section does not represent or reflect all applicable Laws and Regulations and may only include excerpts, portions, and para-phrasing of certain Laws and Regulations. Bidders are solely responsible to determine, obtain, review and interpret the full text of applicable Laws and Regulations.

1.01 Applicable Laws for Bid and Award; General

A. This Contract is being bid and awarded under the provisions of Commonwealth of Massachusetts General Laws ("MGL") Chapter 149, Section 44A, *Definitions; competitive bids; award; bonds . . .* whereby Sections 44A through 44H shall apply.

1. The time period for holding Bids is 30 days after the opening of Bids (Saturdays, Sundays and legal holidays excluded) where Federal approval is not required; where Federal approval is required, the time period for holding bids is 30 days after Federal approval (Saturdays, Sundays and holidays excluded); or for such longer period of time that General Bidder may agree to in writing upon request of Owner.

B. Pursuant to MGL Chapter 149, Sections 44A to 44H and the Bidding Requirements,

1. Bidders must be pre-certified as eligible by the Division of Capital Asset Management and Maintenance (DCAMM), submit such certification along with an Update Statement in accordance with the Annex to the Form for General Bid and sub-Bid; and

2. Sub-Bids for certain classes of Work must first be submitted to the Owner per the Bidding Requirements. If sub-Bids are received and not rejected, they will be considered "filed sub-Bids". Filed sub-Bids will be made available to general Bidders for inclusion in general Bids as applicable, in accordance with the Bidding Requirements.

C. For this Project,

1. the General Bidder must be DCAMM certified for sewage and water treatment plants;

2. Sheet metal work must be performed by a contractor licensed in accordance with 271 CMR 1.00, et seq. governing licensing, permitting, and sheet metal work in Massachusetts; and

3. sub-Bids are required for the following classes of Work as summarized in Section 01 11 20: electrical work

1.02 Additional Defined Terms

A. *General Bidder* – Also "Bidder" as defined in the General Conditions and Supplementary Conditions; a Bidder who submits a general Bid to Owner on the Form for General Bid in accordance with MGL Chapter 149, Sections 44A to 44H along with required Supplements.

B. *Sub-Bidder* – Also "Bidder" as defined in the General Conditions and Supplementary Conditions; a Bidder who files a sub-Bid with Owner for use by a General Bidder, for a class of Work specified in Chapter 149, Section 44F on the applicable Form for Sub-Bid along with required Supplements.

C. *Bid security* – per the Instructions to Bidders and "bid deposit" as used in MGL Chapter 149, Sections 44A to 44H.

D. *Bid Form* – as defined in the General Conditions and Supplementary Conditions and also includes Form for General Bid, Annex and Supplements, Form for Sub-Bid for each class of Work, Annex and Supplements.

E. *Eligible* – A Bidder able to meet all requirements for Bidders or offerors set forth in MGL Chapter 149, Sections 44A to 44H, inclusive; Bidders not debarred from bidding under MGL Chapter 149, Section 44C or any other applicable law, and Bidders who certify they are able to furnish labor that can work in harmony with all other elements of labor employed or to be employed on the Work.

F. *Responsible* – A Bidder demonstrably possessing the skill, ability and integrity necessary to faithfully perform the Work, based upon a determination of competent workmanship and financial soundness in accordance with the provisions of MGL Chapter 149, Section 44D.

G. *General Contractor* – The Successful General Bidder.

1.03 Submission of Sub-Bids

A. Each sub-Bid shall be submitted pursuant to MGL Chapter 149, Section 44F and in accordance with Article 15 of the Instructions to Bidders, and also be identified as "SUB-BID" with the name of the sub-trade for which the sub-Bid is submitted on the outside of the sealed envelope containing the sub-Bid.

B. Within 2 days, Saturdays, Sundays and legal holidays excluded, after opening of sub-Bids, the Owner will reject every sub-Bid which is not accompanied by the required Bid deposit or which otherwise does not conform to the statutory requirements, or which is on a form not completely filled in, or which is incomplete, conditional or obscure, or which contains any addition not called for;

provided, however, that the failure of the Owner to reject such a sub-Bid within such period shall not validate such a sub-Bid nor preclude the Owner from subsequently rejecting.

C. Not later than the second day, Saturdays, Sundays and legal holidays excluded, before the day fixed by the Owner for the opening of general Bids, the Owner shall mail to every person on record as having taken a set of Plans and Specifications, a list of Sub-Bidders arranged by sub-trades and listing for each sub-trade the name, address and sub-Bid price of every Sub-Bidder submitting a sub-Bid thereon not rejected by the Owner and the general Bidders excluded from using such sub-Bid. A person shall not be named by a general Bidder as a Sub-Bidder for a sub-trade on the Form for General Bid unless such person is included for such sub-trade in said list.

D. If a General Bidder not excluded in said list from doing so names as a Sub-Bidder for a sub-trade on the Form for General Bid, a person included for such sub-trade in said list at the sub-Bid price stated in said list, neither the general Bid of such General Bidder nor the Contract executed on the basis of such general Bid shall be invalid or rejected because of the invalidity of such sub-Bid, or because of error in said list, nor shall such general Bid be rejected nor shall such Contract be invalid because of any invalid action taken by the Owner in connection with any sub-Bid or sub-Bids; but there shall be substitution of Sub-Bidders and adjustment of Contract Price as if MGL Chapter 149, Section 44F, subsection (4)(c) were applicable.

1. If no sub-Bid is filed for a sub-trade designated in the general Bid Form or if the only sub-Bids which are filed are restricted to the use of one or more General Bidders, the Owner may state, in an Addendum issued with the list of Sub-Bidders referred to above, that the General Bidder shall include in the cost of its own Work, an amount to cover all the Work required for any such sub-trade. The general Contractor shall cause the Work covered by such sub-trade to be done by a qualified and responsible Subcontractor, subject to the written approval of the Owner. If the Owner determines that any Subcontractor chosen by the general Contractor as provided in this paragraph is not qualified or responsible, the general Contractor shall obtain another Subcontractor who is satisfactory to the Owner with no adjustment in the general Contractor's price.

2. If a rejection of all sub-Bids, other than as set forth above, for such a sub-trade occurs pursuant to MGL Chapter 149, Section 44E subsection (1) or Section 44F subsection (3), the Owner shall state, in an Addendum issued with the list of Sub-Bidders referred to above, the amount to be included by a General Bidder on the general Bid form for such sub-trade; and without in any way affecting other Sub-Bidders who have conformed to the prescribed bidding procedure, new sub-Bids for such sub-trade shall be requested forthwith by written invitation to three or more qualified

Sub-Bidders and shall be publicly opened and read by the Owner at a time and place to be specified in such invitation. The general Contractor shall cause the work covered by such sub-trade to be done by the lowest responsible and eligible Sub-Bidder against whose standing and ability the general Contractor makes no objection or, if there is no such Sub-Bidder, by such Subcontractor against whose standing and ability the general Contractor makes no objection and for such sum as the general Contractor and the Owner may agree upon; and the Contract Price shall be adjusted by the difference between the Subcontract sum and the amount stated in the Addendum. The General Bidder shall include in the cost of its own Work on the Form for General Bid all expenses and profits on account of such adjustments.

E. If a General Bidder customarily performs, with employees on his own payroll who are mechanics or laborers as referred to in MGL Chapter 149 Section 26, a sub-trade for which the Owner has invited filed sub-Bids, it may submit a sub-Bid for such sub-trade which shall be considered on a par with other sub-Bids, and it shall also list under the appropriate sub-Bid category in its Bid its own name and sub-Bid price for such sub-trade. No such sub-Bid shall be considered unless the General Bidder can show (a) it does so customarily perform such sub-trade, and (b) it is qualified to do the sub-trade work. In lieu of listing its name and sub-Bid price in its general Bid, such General Bidder may list the name and amount of the lowest responsible and eligible Sub-Bidder for that sub-trade if (a) such Sub-Bidder's price is lower than his, (b) such sub-Bid is available for his use; and (c) such sub-Bid is not restricted to his use alone or to his use and that of another General Bidder, or Bidders.

F. All Sub-Bidders when finally selected shall be notified in writing of their selection within 48 hours thereafter by the General Bidder.

1.04 Bid Security

A. The Bid security of the 3 lowest Responsible and Eligible General Bidders will be retained until execution of a Contract or within 30 days after Bid opening if no award is made, except if forfeited.

1. If the Bid security is forfeited per the Instructions to Bidders and MGL Chapter 149, Section 44B, the amount of such forfeiture shall be liquidated damages and shall not exceed the difference between the Successful General Bidder's Bid price and the Bid price of the next lowest Responsible and Eligible General Bidder; and provided further that, in case of death, disability, bona fide clerical or mechanical error of a substantial nature, or other similar unforeseen circumstances affecting the General Bidder, the Bid security shall be returned to it.

B. The Bid security of the Sub-Bidders named in the general Bids of the three lowest Responsible and Eligible General Bidders and those of the 3 lowest Responsible

and Eligible Sub-Bidders for each sub trade will be retained until execution of a Contract or within 30 days after Bid opening if no award is made, except if forfeited.

1. If the Bid security is forfeited per the Instructions to Bidders and MGL Chapter 149, Section 44B, the amount of such forfeiture shall be liquidated damages and shall not exceed the difference between the Successful Sub-Bidder's sub-Bid price and the sub-Bid price of the next lowest Responsible and Eligible Sub-Bidder; and provided further that, in case of death, disability, bona fide clerical or mechanical error of a substantial nature, or other similar unforeseen circumstances affecting any such Sub-Bidder, the Bid security shall be returned to it.

1.05 Evaluation of Bids

A. In determining a lowest Responsible and Eligible General Bidder and Sub-Bidder, the Owner will consider the information submitted by each General Bidder and Sub-Bidder in the DCAMM Update Statements.

1.06 Substitution of Sub-Bidders Subsequent to Award

A. If, after the selection of the lowest Responsible and Eligible General Bidder, it be decided to consider Sub-Bidders other than the ones named by such General Bidder in his general Bid, the Owner and such General Bidder shall jointly consider all filed sub-Bids not rejected in accordance with MGL Chapter 149 Section 44F subsection (3).

B. Any agreement to substitute a sub-Bid for the one named in the selected General Bid shall result in an adjustment of the General Bid price in accordance with MGL Chapter 149 Section 44F subsection (4)(b).

C. The General Bidder's price for Work shall also be adjusted by the amount of the change in the premium for the general Contractor's performance bond and his labor and materials or payment bond caused by substitutions.

1.07 Subcontracts with Sub-Bidders

A. Not later than 10 days after the General Bidder selected as the general Contractor is notified by the Owner of his selection as the general Contractor, the General Bidder so selected shall present subcontract agreements to each of the filed Sub-Bidders finally selected in the form included in Section 00 73 10. The selected General Bidder and each of the selected Sub-Bidders shall promptly execute the subcontract agreements, and fully executed copies of the subcontract agreements shall be delivered to the Owner not later than 25 calendar days after award of the Contract to the selected General Bidder.

B. Pursuant to MGL Chapter 149, Section 44F subsection (4)(c), if a selected Sub-Bidder fails, within five (5) days, Saturdays, Sundays and legal holidays excluded, after presentation of a subcontract by the General Bidder selected as the general Contractor, to perform his agreement to execute a subcontract in the form set forth in the Contract Documents with such General Bidder, contingent upon the execution of the Contract, and, if requested so to do by such General Bidder in the general Bid, to furnish a performance and payment bond as stated in his sub-Bid, such General Bidder and the Owner shall select, from the other sub-Bids duly filed with the Owner for such sub-trade and not rejected under MGL Chapter 149 Section 44H, the lowest responsible and eligible Sub-Bidder at the amount named in his sub-Bid as so filed, against whose standing and ability the general Contractor makes no objection, and the Contract Price shall be adjusted by the difference between the amount of such sub-Bid and the amount of the sub-Bid of the delinquent Sub-Bidder.

1.08 Other Requirements of the MGL Applicable to the Project

A. **Foreign Corporations**: The provisions of MGL Chapter 30, Section 39L, *Public construction work by foreign corporations; restrictions and reports,* apply to this Project. If a Bidder is a foreign corporation, it shall provide with its Bid, a certificate from the Commonwealth of Massachusetts Secretary of State stating that the corporation has complied with requirements of Section 15.03 of subdivision A of Part 15 of MGL Chapter 156D and the date of compliance, and further has filed all annual reports required by Section 16.22 of subdivision B of Part 16 of said Chapter 156D, and further, will provide such certificate for each Subcontractor that is a foreign corporation if it receives a Notice of Award. See Section 00 45 05 of the Bidding Requirements.

B. **Taxes:** Bidder shall submit with its Bid, a "Certificate of Good Standing" with respect to all returns due and taxes from the Commonwealth of Massachusetts Department of Revenue certifying Bidder has complied with all laws relating to taxes, reporting of employees and contractors, and withholding and remitting of child support. Bidder will provide such certificate for each Subcontractor if it receives a Notice of Award. Bidders are encouraged to obtain such Certificate of Good Standing online at http://www.mass.gov/dor/businesses/programs-and-services/certificate-of-good-standing.html. See explanation and instructions at the end of this Section.

C. **Debarment**: Bidders shall not be debarred from bidding on or entering into a public contract in the Commonwealth of Massachusetts under the provisions of MGL Chapter 29, Section 29F, *Debarment from bidding; definitions; lists; notice; affiliates; mitigating circumstances*, or any other applicable debarment provisions of any other chapter of the MGL or any rule or regulations promulgated thereunder.

D. **Financial Statements**: If Bidder receives a Notice of Award, the following shall be submitted prior to execution of the Agreement in accordance with MGL Chapter 30, Section 39R *Definitions; contract provisions; management and financial statements; enforcement.*

- A statement by management on internal accounting controls;
- A statement prepared by an independent certified public accountant regarding management's statement; and
- An audited financial statement for the most recent completed fiscal year.

E. **Labor Preferences and Work Hours**

1. The provisions of MGL Chapter 149, Section 26, *Public works; preference to veterans and citizens; wages,* apply to this Project whereby employment in the construction of public works is subject to preference being given to citizens of the Commonwealth of Massachusetts, citizens of the town or city where the Project is located, veterans and service-disabled veterans, and citizens of the United States, and the provisions of MGL Chapter 149, Section 179A, *Preference to citizens in awarding public work contracts, violations,* apply to this Project whereby award of contracts for public work is subject to preference being given to persons who are citizens of the United States.

2. The provisions of MGL Chapter 149, Sections 26, 27, and 27A through 27D, as amended, covering minimum wage rates as determined by the Executive Office of Labor and of Workforce Development, Department of Labor Standards, apply to this Project. It is the responsibility of the Bidders, before Bid opening, to request if necessary, any additional information on Minimum Wage Rates for those trades people who may be employed for the proposed Work under the resulting Contract. See Supplementary Conditions.

3. The provisions of MGL Chapter 149, Section 30, *Eight hour day and six day week; emergencies; work on highways* and Section 34, *Public contracts; stipulation as to hours and days of work; void contracts* apply to this Project which regulate work hours for public construction.

F. **Sales Tax Exemption**: MGL Chapter 64H, Section 6, *Exemptions,* subsection (f) exempts building materials and supplies to be used in the Project from Commonwealth of Massachusetts sales tax and Bidder shall not include any amount therefor. The words "building materials and supplies" shall include all materials and supplies consumed, employed or expended in the construction, reconstruction, alteration, remodeling or repair of any building, structure, public highway, bridge, or other such public work, as well as such materials and supplies physically incorporated therein. Said words shall also include rental charges for construction vehicles, equipment and machinery rented specifically for use on the

Project Site, or while being used exclusively for the transportation of materials for the Project.

G. **Safety and Health**: This Project is subject to Massachusetts Department of Labor and Industries, Division of Occupational Safety *454 CMR 10.00 et seq.* "*Construction Industry Rules and Regulations*"; Massachusetts Department of Public Safety *520 CMR 14.00 et seq.* "*Excavation and Trench Safety*"; MGL Chapter 82, *The Laying Out, Alteration, Relocation and Discontinuance Of Public Ways, and Specific Repairs Thereon*, MGL Chapter 82A, *Excavation and Trench Safety,* and MGL Chapter 149 Section 129A, *Shoring Trenches for local governments.*

In addition, MGL Chapter 30, Section 39S, requires that all employees to be employed at the Work Site will have successfully completed a course in construction safety and health approved by the United States Occupational Safety and Health Administration that is at least 10 hours in duration at the time the employee begins Work, and documentation of successful completion of said course shall be submitted with the first certified payroll report for each employee. Any employee found on a Work Site subject to this section without documentation of successful completion of a course in construction safety and health approved by the United States Occupational Safety and Health Administration that is at least 10 hours in duration shall be subject to immediate removal.

END OF SECTION

The Official Website of the Department of Revenue (DOR)

Department of Revenue

About DOR

Home Businesses Programs & Services Certificate of Good Standing

Certificate of Good Standing

Powered by Google Translate

Corporations and other organizations often need proof that they are in good standing with the Commonwealth, i.e., that all tax liabilities have been met in order to obtain financing, sell their business, renew licenses or enter into other business transactions.

The fastest and easiest way to obtain a Certificate is via our online application. Both taxpayers and authorized practitioners can use this program to obtain a Certificate within a few days. Before beginning this process, make sure that key authenticating data is readily available, including the entity's id number, a list of tax types filed with DOR and the dates when the entity was first required to collect and submit these taxes.

Once the applicant has been authenticated, a search will be made of our databases to identify any returns that need to be filed or bills that remain unpaid. Since this process takes up to 48 hours, users will be given an application number and asked to come back to the program in a couple of days. At that time, fully compliant taxpayers will be able to print a Certificate or request that it be mailed to the address of record. If bills are identified, an opportunity will be given to pay the amount owed via EFW. A Certificate will then be issued. Taxpayers with nonfiled Trustee tax returns (Sales, Meals, Withholding, Room Occupancy), can file and pay within the application and obtain their Certificate. Taxpayers with nonfiled Income and Corporate returns will be given instructions on how to file on paper and obtain a Certificate.

Please note:
Taxpayers responsible for certain taxes such as Alcoholic Beverage Excise, Cigarette Excise, Sales Tax on Boats, International Fuels Tax Agreement, Smokeless Tobacco or Ferry Embarkation will need to file a paper application. This form can be printed from this site. **Paper applications can take 4 to 6 weeks.**

Paper applications are also required in order to obtain a Waiver of Corporate Tax lien.

Dissolutions: Corporations have not been required to obtain a Certificate of Good Standing prior to a voluntary dissolution since March 1992.

© 2013 Commonwealth of Massachusetts
Mass.Gov® is a registered service mark of the Commonwealth of Massachusetts.

Site Policies Contact Us

http://www.mass.gov/dor/businesses/programs-and-services/certificate-of-good-standing.

This page intentionally left blank

SECTION 00 31 00

AVAILABLE PROJECT INFORMATION

INFORMATION	LOCATION OF INFORMATION
Existing Conditions	Drawings
NPDES Permit	Available from Owner

END OF SECTION

This page intentionally left blank.

SECTION 00 41 02

FORM FOR GENERAL BID

To the Awarding Authority:

A. The Undersigned proposes to furnish all labor and materials required for the civil, mechanical, process, instrumentation and electrical work required for upgrades to the residuals handling facilities. Work includes, but is not limited to, replacement of backwash recycle pumps, removal of solids from lagoons, installation of underdrain systems and decant weirs in the lagoons and yard piping. Also included is earthwork, paving, surface restoration, erosion control, traffic control, appurtenances at the Lowell Regional Water Utility Residuals Handling Facility, and corresponds with Project number 227251.30, in accordance with the accompanying Plans and Specifications prepared by Woodard & Curran, for the Total Contract Price written below, subject to additions and deductions according to the terms of the Contract Documents.

B. This Bid includes Addenda numbered:_____

C. The proposed Contract Price (excluding sales and use tax) is

TOTAL PRICE FOR ITEMS G and S1

$_____
(in figures)

_____ Dollars and
(in words)

_____ Cents
(in words)

D. The subdivision of the proposed Contract Price is as follows (excluding sales and use tax).

Item G – Work of the General Contractor
(being all Work other than that covered in Sub-Bid Item S1 based on Unit Price Schedule below.)

G GENERAL CONTRACTOR Work for the Residuals Handling Facilities Upgrades (Total of Items 1a-1d)

$_____

Item No.	Item Description with Unit Price in Written Words	Estimated Quantity & Unit	Unit Bid Price		Total Bid Item Price	
			Dollars	Cents	Dollars	Cents
1a	Facilities Upgrade (excluding solids removal and Work included in sub-Bid Item S1) @ _____ _____ Dollars and _____Cents	1 LS				
1b	Solids Removal from Lagoon 1 @ _____ _____ Dollars and _____Cents PER Ton	5,000 Ton				
1c	Solids Removal from Lagoon 2 @ _____ _____ Dollars and _____Cents PER Ton	5,000 Ton				
1d	Solids Removal from Lagoon 3 @ _____ _____ Dollars and _____Cents PER Ton	10,000 Ton				

Unit Prices have been computed in accordance with Paragraph 11.03.A of the General Conditions and Supplementary Conditions, if any.

Sub-Bid Items:

Sub-trade	Name of Sub-Bidder	Amount	Bonds required (Yes or No)
Item S1: Electrical Work		$	

The Undersigned agrees that each of the above named Sub-Bidders will be used for the Work indicated at the amount stated, unless a substitution is made. The Undersigned further agrees to pay the premiums for the performance and payment bonds furnished by Sub-Bidders as requested herein and that all of the cost of all such premiums is included in the amount set forth in Item 1 of this Bid.

The Undersigned agrees that if selected as general Contractor, Undersigned will promptly confer with the Awarding Authority on the question of Sub-Bidders; and that the Awarding Authority may substitute for any sub-Bid listed above, a sub-Bid filed with the Awarding Authority by another Sub-Bidder for the sub-trade against whose standing and ability the Undersigned makes no objection; and that the Undersigned will use all such finally selected Sub-Bidders at the amounts named in their respective Sub-Bids and be in every way as responsible for them and their Work as if they had been originally named in this General Bid, the total Contract Price being adjusted to conform thereto.

E. The Undersigned agrees that, if selected as general Contractor, Undersigned will within 5 days, Saturdays, Sundays and legal holidays excluded, after presentation thereof by the Awarding Authority, execute a Contract in accordance with the terms of this Bid and the Contract Documents and furnish a performance bond and also a labor and materials or payment bond, each of a surety company qualified to do business under the laws of the Commonwealth and satisfactory to the Awarding Authority and each in the sum of the Contract Price, the premiums for which are to be paid by the general Contractor and are included in the Contract Price; provided however that if there is more than 1 surety company, the surety companies shall be jointly and severally liable.

The Undersigned hereby certifies that Undersigned is able to furnish labor that can work in harmony with all other elements of labor employed or to be employed on the Work; that all employees to be employed at the Work Site will have successfully completed a course in construction safety and health approved by the United States Occupational Safety and Health Administration that is at least 10 hours in duration at the time the employee begins work and who shall furnish documentation of successful completion of said course with the first certified payroll report for each employee; and that Undersigned will comply fully with all Laws and Regulations applicable to awards made subject to MGL Chapter 149, Section 44A.

The Undersigned further certifies under the penalties of perjury that this Bid is in all respects bona fide, fair and made without collusion or fraud with any other person. As used in this subsection, the word "person" shall mean any natural person, joint venture, partnership, corporation or other business or legal entity. The Undersigned further certifies under penalty of perjury that the said Undersigned is not presently debarred from doing public construction work in the Commonwealth under the provisions of Chapter 29, Section 29F, or any other applicable debarment provisions of any other chapter of the General Laws or any rule or Regulation promulgated thereunder.

This Bid is submitted by the Undersigned.

A Corporation

Corporation Name: _____

State of incorporation: _____

Type: _____
(*General Business, Professional, Service, other*)

By: _____
(*Signature – attach evidence of authority to sign*)

Name (*typed or printed*): _____

Title: _____

(CORPORATE SEAL)
Attest: _____
(*Signature of Corporate Secretary*)

Business Address: _____

_____

Phone & Facsimile Nos: _____

Email address: _____

Date of qualification to do business as out-of-state corporation: _____

A Limited Liability Company (LLC)

LLC Name: _____

State in which organized: _____

By: _____
(*Signature – attach evidence of authority to sign*)

Name (*typed or printed*): _____

Title: _____

Business Address: _____

_____

Phone & Facsimile Nos: _____

Email address: _____

A Partnership

Partnership Name: _____ (SEAL)

By: _____
(*Signature of general partner – attach evidence of authority to sign*)

Name (*typed or printed*): _____

Business Address: _____

_____

Phone & Facsimile Nos: _____

Email address: _____

A Joint Venture

First Joint Venturer Name: _____

By: _____
(*Signature – attach evidence of authority to sign*)

Name (*typed or printed*): _____

Title: _____

Business Address: _____

_____

Phone & Facsimile Nos: _____

Email address: _____

Second Joint Venturer Name: _____

By: _____
(*Signature – attach evidence of authority to sign*)

Name (*typed or printed*): _____

Title: _____

Business Address: _____

_____

Phone & Facsimile Nos: _____

Email address: _____

(Each joint venturer must sign. The manner of signing for each individual, partnership, corporation and limited liability company that is a party to the joint venture should be in the manner indicated above.)

SUBMITTED ON:
State License No. (if applicable)
EIN/FEIN:

END OF SECTION

SECTION 00 41 02.01

ANNEX TO FORM FOR GENERAL BID

1.01 The undersigned General Bidder acknowledges that the time period for holding Bids, where Federal approval is not required is 30 days, Saturdays, Sundays and legal holidays excluded, after the opening of Bids; and where Federal approval is required, the time period for holding Bids is 30 days, Saturdays, Sundays and holidays excluded after Federal approval. Notwithstanding the above, by mutual agreement, the general Bid will remain subject to acceptance for 60 days after the Bid opening, allowing for Federal approval if needed as stated above, or for such longer period of time that General Bidder may agree to in writing upon request of Owner.

1.02 The undersigned General Bidder proposes and agrees, if its general Bid is accepted, to enter into an Agreement with Owner in the form included in the Bidding Documents, to perform all Work as specified or indicated in the Bidding Documents for the prices indicated in the general Bid and within the times indicated in the Bidding Documents, and in accordance with the other terms and conditions of the Bidding Documents.

1.03 General Bidder accepts all of the terms and conditions of the Bidding Documents including, without limitation:

A. those dealing with disposition of Bid security;
B. those included in the Supplementary Instructions to General Bidders;
C. insurance and bonding requirements (payment bond and performance bond each equal to 100% of the total Contract Price) set forth in the General Conditions and Supplementary Conditions, if any;
D. Contract Times as set forth in the Agreement; and
E. provisions for liquidated damages as set forth in the Agreement.

1.04 The following documents are submitted with and made a condition of the general Bid as acknowledged in the General Bid Submittal Checklist.

- 00 43 13 Bid Bond – Penal Sum Form
- 00 43 45 Exceptions and Deviations
- 00 43 93 General Bid Submittal Checklist
- 00 45 05 General Bidder's Representations and Certifications
- 00 45 19 Non-collusion Affidavit
- DCAMM Prime/General Certificate of Contractor Eligibility (sample included at the end of this Section)
- 00 45 55 DCAMM Prime/General Contractor Update Statement

1.05 Communications concerning the general Bid shall be addressed to:

Based on EJCDC C-410 Suggested Bid Form for Construction Contracts
Copyright © 2007 National Society of Professional Engineers for EJCDC. All rights reserved.

Name _____

Title _____

Address _____

_____

Telephone No. _____

Facsimile No. _____

Email _____

SUBMITTED ON:
By:
Authorized person per Form for General Bid

END OF SECTION

Based on EJCDC C-410 Suggested Bid Form for Construction Contracts
Copyright © 2007 National Society of Professional Engineers for EJCDC. All rights reserved.

The Commonwealth of Massachusetts
Executive Office for Administration and Finance
Division of Capital Asset Management
One Ashburton Place
Boston, Massachusetts 02108
Tel: (617) 727-4050
Fax: (617) 727-5363

DEVAL L. PATRICK
GOVERNOR

TIMOTHY P. MURRAY
LIEUTENANT GOVERNOR

JAY GONZALEZ
SECRETARY, ADMINISTRATION & FINANCE

CAROLE CORNELISON
COMMISSIONER

Prime/General
Certificate of Contractor Eligibility

CONTRACTOR IDENTIFICATION NUMBER: 0000

This Certificate Shall Be Used for Submitting Prime/General Bids Only

1. **CERTIFICATION PERIOD:** This Certificate is valid from 1/1/2011 to 1/1/2012
2. **CONTRACTOR'S NAME:** Sample Contractor
3. **CONTRACTOR'S ADDRESS:** 123 Main Street Anytown, MA 01234
4. **WORK CATEGORIES:** This Contractor is certified to file bids under Massachusetts General Laws Chapter 149, Chapter 149A and Chapter 25A in the following checked Categories of Work:

☑ Alarm Systems	☑ Elevators	☑ Historical Masonry	☑ Painting
☑ Asbestos Removal	☑ Energy Management Systems	☑ Historical Painting	☑ Plumbing
☑ Deleading	☑ Exterior Siding	☑ Historical Roofing	☑ Pumping Stations
☑ Demolition	☑ Fire Protection Sprinkler Systems	☑ HVAC	☑ Roofing
☑ Doors & Windows	☑ Floor Covering	☑ Masonry	☑ Sewage & Water Treatment Plants
☑ Electrical	☑ General Building Construction	☑ Mechanical Systems	☑ Telecommunication Systems
☑ Electronic Security Systems	☑ Historical Building Restoration	☑ Modular Construction/Prefab	☑ Waterproofing

5. **EVALUATIONS:**
   - Number of Projects Evaluated: 12
   - Average Project Evaluation Rating: 92
   - Number of Projects Below Passing Score: 0
6. **PROJECT LIMITS:**
   - Single Project Limit (SPL): $2,500,000.00
   - Aggregate Work Limit (AWL): $5,000,000.00
   - General Building Construction Limit: N/A
7. **SUPPLIER DIVERSITY OFFICE CERTIFICATION:** N/A

_____ _____

Taran Grigsby, General Counsel,
for Carole J. Cornelison, Commissioner

Approval Date

NOTE TO CONTRACTORS: *Complete Applications for Renewal of Contractor Eligibility are due no later than three months PRIOR to the Expiration Date of the Certification Period shown above. Failure to submit Completed Applications timely may result in a gap in Certification or a lapse in Certification altogether for your company.*

Reviewer's Initials _____

Sample

This page intentionally left blank

SECTION 00 41 03.01

FORM FOR SUB-BID – ELECTRICAL WORK

To all General Bidders Except those Excluded:

A. The Undersigned proposes to furnish all labor and materials required in for completing, in accordance with the hereinafter described accordance with the hereinafter described Drawings, Specifications and Addenda, all the Work identified in Section 01 11 20, and in any Plans specified in such section of the Specifications and according to the terms of the Contract Documents prepared by Woodard & Curran for the Residuals Handling Facilities Upgrade. The work is to be completed at the Lowell Regional Water Utilities Residuals Handling Facility in Lowell, MA, and corresponds with Project number 227251.30, for the contract sum (excluding sales and use tax) of

TOTAL ITEM S1 LUMP SUM PRICE: $_____
(in figures)

_____ Dollars and
(in words)

_____ Cents
(in words)

B. This sub-Bid includes Addenda numbered:_____

C. This sub-Bid

☐ may be used by any Sub-Bidder except:

_____

_____

☐ may only be used by the following Sub-Bidders:

_____

_____

[To exclude Sub-Bidders, insert "X" in one box only and fill in blank following that box. Do not answer C if no Sub-Bidders are excluded.]

D. The Undersigned agrees that, if it is selected as a Sub-Bidder, Undersigned will, within 5 days, Saturdays, Sundays and legal holidays excluded, after presentation of a subcontract by the Sub-Bidder selected as the general Contractor, execute with such general Contractor a subcontract in accordance with the terms of this Sub-Bid, and contingent upon the execution of the Contract; and, if requested so to do in the sub-Bid by the Sub-Bidder, who shall pay the

premiums therefor, or if prequalification is required pursuant to MGL Chapter 149 Section 44D 3/4, furnish a performance and payment bond of a surety company qualified to do business under the laws of the Commonwealth and satisfactory to the Awarding Authority, in the full sum of the subcontract price.

E. The names of all persons, firms and corporations furnishing to the Undersigned labor or labor and materials for the class or classes or part thereof of Work for which the provisions of the section(s) of the Specifications for this sub-trade require a listing in this paragraph, including the Undersigned if customarily furnished by persons Undersigned's own payroll, and in the absence of a contrary provision in the Specifications, the name of each such class of Work or part thereto and the bid price for such class of Work or part thereof are:

Name	Class of Work	Bid Price

[Do not give bid price for any class or part thereof furnished by Undersigned.]

F. The Undersigned agrees that the above list of bids to the Undersigned represents bona fide bids based on the hereinbefore described Plans, Specifications and Addenda and that, if the Undersigned is awarded the subcontract, they will be used for the Work indicated at the amounts stated, if satisfactory to the Awarding Authority.

G. The Undersigned further agrees to be bound to the general Contractor by the terms of the hereinbefore described Plans, Specifications, including the Contract Documents, and Addenda, and to assume toward the general Contractor all the obligations and responsibilities that general Contractor, by those documents, assumes toward the Awarding Authority.

H. The Undersigned offers the following information as evidence of the Sub-Bidder's qualifications to perform the Work as bid upon according to all the requirements of the Plans and Specifications.

1. Have been in business under present business name _____ years.

2. Ever failed to complete any work awarded? _____

3. List one or more recent buildings/projects with names of the general contractor and architect/engineer on which you served as a subcontractor for work of similar character as required for the above-named building/Project.

Building/Project	Architect/Engineer	General Contractor	Amount of Contract

4. Bank Reference _____

I. The Undersigned hereby certifies that Undersigned is able to furnish labor that can work in harmony with all other elements of labor employed or to be employed on the Work; that all employees to be employed at the Work Site will have successfully completed a course in construction safety and health approved by the United States Occupational Safety and Health Administration that is at least 10 hours in duration at the time the employee begins work and who shall furnish documentation of successful completion of said course with the first certified payroll report for each employee; and that Undersigned will comply fully with all Laws and Regulations applicable to awards made subject to MGL Chapter 149, Section 44F.

The Undersigned further certifies under the penalties of perjury that this Sub-Bid is in all respects bona fide, fair and made without collusion or fraud with any other person. As used in this subsection, the word "person" shall mean any natural person, joint venture, partnership, corporation or other business or legal entity. The Undersigned further certifies under penalty of perjury that the said Undersigned is not presently debarred from doing public construction work in the Commonwealth under the provisions of Chapter 29, Section 29F, or any other applicable debarment provisions of any other chapter of the General Laws or any rule or Regulation promulgated thereunder.

This Bid is submitted by the Undersigned.

A Corporation

Corporation Name: _____

State of incorporation: _____

Type: _____
(*General Business, Professional, Service, other*)

By: _____
(*Signature – attach evidence of authority to sign*)

Name (*typed or printed*): _____

Title: _____

(CORPORATE SEAL)
Attest: _____
(*Signature of Corporate Secretary*)

Business Address: _____

_____

Phone & Facsimile Nos: _____

Email address: _____

Date of qualification to do business as out-of-state corporation: _____

A Limited Liability Company (LLC)

LLC Name: _____

State in which organized: _____

By: _____
(*Signature – attach evidence of authority to sign*)

Name (*typed or printed*): _____

Title: _____

Business Address: _____

_____

Phone & Facsimile Nos: _____

Email address: _____

A Partnership

Partnership Name: _____(SEAL)

By: _____
(*Signature of general partner – attach evidence of authority to sign*)

Name (*typed or printed*): _____

Business Address: _____

_____

Phone & Facsimile Nos: _____

Email address: _____

A Joint Venture

First Joint Venturer Name: _____

By: _____
(*Signature – attach evidence of authority to sign*)

Name (*typed or printed*): _____

Title: _____

Business Address: _____

_____

Phone & Facsimile Nos: _____

Email address: _____

Second Joint Venturer Name: _____

By: _____
(*Signature – attach evidence of authority to sign*)

Name (*typed or printed*): _____

Title: _____

Business Address: _____

_____

Phone & Facsimile Nos: _____

Email address: _____

(Each joint venturer must sign. The manner of signing for each individual, partnership, corporation and limited liability company that is a party to the joint venture should be in the manner indicated above.)

SUBMITTED ON:
State License No. (if applicable)
EIN/FEIN:

END OF SECTION

ANNEX TO FORM FOR SUB-BID – ELECTRICAL WORK

1.01 The undersigned Sub-Bidder acknowledges that the time period for holding Bids, *where Federal approval is not required* is 30 days, Saturdays, Sundays and legal holidays excluded, after the opening of Bids; and *where Federal approval is required*, the time period for holding bids is 30 days, Saturdays, Sundays and holidays excluded after Federal approval. Notwithstanding the above, by mutual agreement, the sub-Bid will remain subject to acceptance for 60 days after the Bid opening, allowing for Federal approval if needed as stated above, or for such longer period of time that Sub-Bidder may agree to in writing upon request of Owner.

1.02 The undersigned Sub-Bidder proposes and agrees, if its sub-Bid is accepted, to enter into a subcontract with the general Contractor in the form included in the Bidding Documents, to perform all Work as specified or indicated in the Bidding Documents for the prices indicated in the sub-Bid and within the times indicated in the Bidding Documents, and in accordance with the other terms and conditions of the Bidding Documents.

1.03 Sub-Bidder accepts all of the terms and conditions of the Bidding Documents including, without limitation:

A. those dealing with disposition of Bid security;
B. those included in the Supplementary Instructions to Sub-Bidders;
C. insurance and bonding requirements (payment bond and performance bond each equal to 100% of the total subcontract price) set forth in the Standard General and Supplementary Conditions and Additional Supplementary Conditions, if any;
D. Contract Times as set forth in the Agreement; and
E. provisions for liquidated damages as set forth in the Agreement.

1.04 The following documents are submitted with and made a condition of the sub-Bid as acknowledged in the Sub-Bid Submittal Checklist:

- 00 43 13 Bid Bond – Penal Sum Form
- 00 43 93.01 Sub-Bid Submittal Checklist
- 00 45 05.01 Sub-Bidder's Representations and Certifications
- 00 45 19 Non-collusion Affidavit
- DCAMM Filed Sub-Bid Certificate of Contractor Eligibility (sample included at the end of this Section)
- 00 45 56 DCAMM Sub-Bidder Update Statement

1.05 Communications concerning the sub-Bid shall be addressed to:

Name _____

Title _____

Address _____

_____

Telephone No. _____

Facsimile No. _____

Email _____

SUBMITTED ON:
By:
Authorized person per Form for Sub-Bid

END OF SECTION

The Commonwealth of Massachusetts
Executive Office for Administration and Finance
Division of Capital Asset Management
One Ashburton Place
Boston, Massachusetts 02108
Tel: (617) 727-4050
Fax: (617) 727-5363

DEVAL L. PATRICK
GOVERNOR

TIMOTHY P. MURRAY
LIEUTENANT GOVERNOR

JAY GONZALEZ
SECRETARY, ADMINISTRATION & FINANCE

CAROLE CORNELISON
COMMISSIONER

Filed Sub-Bid
Certificate of Contractor Eligibility

CONTRACTOR IDENTIFICATION NUMBER: 0000

This Certificate Shall Be Used for Submitting Filed Sub-Bids Only

1. **CERTIFICATION PERIOD:** This Certificate is valid from 1/1/2011 to 1/2/2012
2. **CONTRACTOR'S NAME:** Test Screen --Do Not Type Over
3. **CONTRACTOR'S ADDRESS:** 123 Main Street Anytown, MA 01950
4. **WORK CATEGORIES:** This Contractor is certified to file bids under Massachusetts General Laws Chapter 149, Chapter 149A and Chapter 25A in the following checked Categories of Work:

☑ Acoustical Tile	☑ HVAC	☑ Miscellaneous & Ornamental Iron	☑ Terrazzo
☑ Electrical Work	☑ Lathing & Plastering	☑ Painting	☑ Tile
☑ Elevators	☑ Marble	☑ Plumbing	☑ Waterproofing, Damp proofing, and Caulking
☑ Fire Protection Sprinkler Systems	☑ Masonry Work	☑ Resilient Floors	
☑ Glass and Glazing	☑ Metal Windows	☑ Roofing & Flashing	

5. **EVALUATIONS:**
   - Number of Projects Evaluated: 15
   - Average Project Evaluation Rating: 85
   - Number of Projects Below Passing Score: 2
6. **SUPPLIER DIVERSITY OFFICE CERTIFICATION:** Minority Owned Business Enterprise

Freya S. Bernstein, Deputy General Counsel,
for Carole J. Cornelison, Commissioner

Approval Date

NOTE TO CONTRACTORS: *Complete Applications for Renewal of Contractor Eligibility are due no later than three months PRIOR to the Expiration Date of the Certification Period shown above. Failure to submit Completed Applications timely may result in a gap in Certification or a lapse in Certification altogether for your company.*

Reviewer's Initials _____

This page intentionally left blank.

BID BOND

Any singular reference to Bidder, Surety, Owner or other party shall be considered plural where applicable.

BIDDER *(Name and Address)*:

SURETY *(Name and Address of Principal Place of Business)*:

OWNER *(Name and Address)*:

BID
Bid Due Date:
Description *(Project Name and Include Location)*:

BOND
Bond Number:
Date *(Not earlier than Bid due date)*:
Penal sum _____ $ _____
(Words) (Figures)

Surety and Bidder, intending to be legally bound hereby, subject to the terms set forth below, do each cause this Bid Bond to be duly executed by an authorized officer, agent, or representative.

BIDDER	**SURETY**
_____ (Seal)	_____ (Seal)
Bidder's Name and Corporate Seal	Surety's Name and Corporate Seal
By: _____	By: _____
Signature	Signature (Attach Power of Attorney)
_____	_____
Print Name	Print Name
_____	_____
Title	Title
Attest: _____	Attest: _____
Signature	Signature
_____	_____
Title	Title

Note: Above addresses are to be used for giving any required notice. Provide execution by any additional parties, such as joint venturers, if necessary.

1. Bidder and Surety, jointly and severally, bind themselves, their heirs, executors, administrators, successors, and assigns to pay to Owner upon default of Bidder the penal sum set forth on the face of this Bond. Payment of the penal sum is the extent of Bidder's and Surety's liability. Recovery of such penal sum under the terms of this Bond shall be Owner's sole and exclusive remedy upon default of Bidder.

2. Default of Bidder shall occur upon the failure of Bidder to deliver within the time required by the Bidding Documents (or any extension thereof agreed to in writing by Owner) the executed Agreement required by the Bidding Documents and any performance and payment bonds required by the Bidding Documents.

3. This obligation shall be null and void if:

3.1 Owner accepts Bidder's Bid and Bidder delivers within the time required by the Bidding Documents (or any extension thereof agreed to in writing by Owner) the executed Agreement required by the Bidding Documents and any performance and payment bonds required by the Bidding Documents, or

3.2 All Bids are rejected by Owner, or

3.3 Owner fails to issue a Notice of Award to Bidder within the time specified in the Bidding Documents (or any extension thereof agreed to in writing by Bidder and, if applicable, consented to by Surety when required by Paragraph 5 hereof).

4. Payment under this Bond will be due and payable upon default of Bidder and within 30 calendar days after receipt by Bidder and Surety of written notice of default from Owner, which notice will be given with reasonable promptness, identifying this Bond and the Project and including a statement of the amount due.

5. Surety waives notice of any and all defenses based on or arising out of any time extension to issue Notice of Award agreed to in writing by Owner and Bidder, provided that the total time for issuing Notice of Award including extensions shall not in the aggregate exceed 120 days from Bid due date without Surety's written consent.

6. No suit or action shall be commenced under this Bond prior to 30 calendar days after the notice of default required in Paragraph 4 above is received by Bidder and Surety and in no case later than one year after Bid due date.

7. Any suit or action under this Bond shall be commenced only in a court of competent jurisdiction located in the state in which the Project is located.

8. Notices required hereunder shall be in writing and sent to Bidder and Surety at their respective addresses shown on the face of this Bond. Such notices may be sent by personal delivery, commercial courier, or by United States Registered or Certified Mail, return receipt requested, postage pre-paid, and shall be deemed to be effective upon receipt by the party concerned.

9. Surety shall cause to be attached to this Bond a current and effective Power of Attorney evidencing the authority of the officer, agent, or representative who executed this Bond on behalf of Surety to execute, seal, and deliver such Bond and bind the Surety thereby.

10. This Bond is intended to conform to all applicable statutory requirements. Any applicable requirement of any applicable statute that has been omitted from this Bond shall be deemed to be included herein as if set forth at length. If any provision of this Bond conflicts with any applicable statute, then the provision of said statute shall govern and the remainder of this Bond that is not in conflict therewith shall continue in full force and effect.

11. The term "Bid" as used herein includes a Bid, offer, or proposal as applicable.

SECTION 00 43 45

EXCEPTIONS AND DEVIATIONS

PROPOSED EXCEPTIONS AND DEVIATIONS, INCLUDING PROPOSED "OR-EQUAL" AND SUBSTITUTE ITEMS, MAY ONLY BE SUBMITTED ON THIS FORM AND MAY BE ACCEPTED OR REJECTED UNILATERALLY BY OWNER, IN ITS SOLE DISCRETION.

Each exception and deviation proposed (including any "or-equal" and substitute items to be submitted for consideration prior to receipt of Bids and excluding priced options or alternates specified in the Bid Form) must be summarized and additively or deductively priced below with specific details included or attached in accordance with the instructions below. The summary must include a reference to the Section(s) of the Bidding Documents affected by the proposed exception or deviation.

Bids that do not comply with these requirements for the presentation of exceptions may be considered non responsive and may be rejected at the discretion of the Owner.

Presentation of Specific Details of Exceptions and Deviations

1. Describe specific details of exceptions and deviations by referencing the applicable section number, section title, page number, heading(s), and paragraph(s) of the Bidding Documents. Include this information directly in "Description" column of table below and/or include a separate attachment if necessary, referencing the attachment in the Description" column.

2. Changes in language: Present proposed deletions by setting off in brackets, thus: [delete this language], and present proposed substitute or new language by underlining, thus: <u>substitute this language</u>.

3. Each exception or deviation is to be separately priced. Zero may be used.

4. **Identify proposed "or-equal" and substitute items in the same manner and submit requests for consideration of "or-equal" and substitute items in accordance with Article 11 of the Instructions to Bidders.**

SUMMARY OF EXCEPTIONS AND DEVIATIONS

Description	Price Adjustment Amount (Indicate deductions in parentheses)

END OF SECTION

SECTION 00 43 93

GENERAL BID SUBMITTAL CHECKLIST

General Bidder confirms that the following documents are fully completed, included in and made part of its general Bid.

- ☐ 00 41 02 Form for General Bid
- ☐ 00 41 02.01 Annex to Form for General Bid
- ☐ 00 43 13 Bid Bond – Penal Sum Form
- ☐ 00 43 45 Exceptions and Deviations
- ☐ 00 45 05 General Bidder's Representations and Certifications including required submittals
    - o If a foreign corporation, certificate from the Secretary of State of the Commonwealth of Massachusetts that the corporation has complied with requirements of section 15.03 of subdivision A of Part 15 of chapter 156D and the date of compliance, and further has filed all annual reports required by section 16.22 of subdivision B of Part 16 of said chapter 156
    - o Certificate of Good Standing with respect to all returns due and taxes from the Commonwealth of Massachusetts Department of Revenue
- ☐ 00 45 19 Non-collusion Affidavit
- ☐ DCAMM Prime/General Certificate of Contractor Eligibility (sample included at the end of Section 00 41 02.01)
- ☐ 00 45 55 DCAMM General Contractor Update Statement

CONFIRMED BY GENERAL BIDDER ON:
By:
Authorized person per General Bid Form and Annex

END OF SECTION

This page intentionally left blank.

SECTION 00 43 93.01

SUB-BID SUBMITTAL CHECKLIST

Sub-Bidder confirms that the following documents are fully completed, included in and made part of its sub-Bid.

Check that which applies:

☐ 00 41 03.01 Form for Sub-Bid and Annex – Electrical Work

Submitted with each sub-Bid:

☐ 00 43 13 Bid Bond – Penal Sum Form

☐ 00 45 05.01 Sub-Bidder's Representations and Certifications including required submittals

- If a foreign corporation, certificate from the Secretary of State of the Commonwealth of Massachusetts that the corporation has complied with requirements of section 15.03 of subdivision A of Part 15 of chapter 156D and the date of compliance, and further has filed all annual reports required by section 16.22 of subdivision B of Part 16 of said chapter 156

- Certificate of Good Standing with respect to all returns due and taxes from the Commonwealth of Massachusetts Department of Revenue

☐ 00 45 19 Non-collusion Affidavit

☐ DCAMM Filed Sub-Bid Certificate of Contractor Eligibility (sample included at the end of Form for Sub-Bid)

☐ 00 45 56 DCAMM Sub-Bidder Update Statement

CONFIRMED BY SUB-BIDDER ON:
By:
Authorized person per Form for Sub-Bid and Annex

END OF SECTION

This page intentionally left blank

SECTION 00 45 05

GENERAL BIDDER'S REPRESENTATIONS AND CERTIFICATIONS

The undersigned, under the penalties of perjury, certifies and represents the following which is made a condition of the general Bid.

1.01 General Bidder's Representations

A. General Bidder has examined and carefully studied the Bidding Documents and other related data identified in the Bidding Documents.

B. General Bidder has visited the Site and become familiar with and is satisfied as to the general, local, and Site conditions that may affect cost, progress, and performance of the Work.

C. General Bidder is familiar with and is satisfied as to all Laws and Regulations that may affect cost, progress, and performance of the Work.

D. General Bidder has carefully studied all: (1) reports of explorations and tests of subsurface conditions at or contiguous to the Site and all drawings of physical conditions relating to existing surface or subsurface structures at the Site (except Underground Facilities) that have been identified in Section 00 73 10 of the Supplementary Conditions, Paragraph 4.02, as containing reliable "technical data," and (2) reports and drawings of Hazardous Environmental Conditions, if any, at the Site that have been identified in Section 00 73 10 of the Supplementary Conditions, Paragraph 4.06, as containing reliable "technical data."

E. General Bidder has considered the information known to General Bidder; information commonly known to contractors doing business in the locality of the Site; information and observations obtained from visits to the Site; the Bidding Documents; and the Site-related reports and drawings identified in the Bidding Documents, with respect to the effect of such information, observations, and documents on (1) the cost, progress, and performance of the Work; (2) the means, methods, techniques, sequences, and procedures of construction to be employed by General Bidder, including applying the specific means, methods, techniques, sequences, and procedures of construction expressly required by the Bidding Documents; and (3) General Bidder's safety precautions and programs.

F. Based on the information and observations referred to in Paragraph E above, General Bidder does not consider that further examinations, investigations, explorations, tests, studies, or data are necessary for the determination of the general Bid for performance of the Work at the price(s) bid and within the times required, and in accordance with the other terms and conditions of the Bidding Documents.

G. General Bidder is aware of the general nature of work to be performed by Owner and others at the Site that relates to the Work as indicated in the Bidding Documents.

H. General Bidder has given Engineer written notice of all conflicts, errors, ambiguities, or discrepancies that General Bidder has discovered in the Bidding Documents, and the written resolution thereof by Engineer is acceptable to General Bidder.

I. The Bidding Documents are generally sufficient to indicate and convey understanding of all terms and conditions for the performance of the Work for which the general Bid is submitted.

1.02 General Bidder's Certifications

A. The general Bid is genuine and not made in the interest of or on behalf of any undisclosed individual or entity and is not submitted in conformity with any collusive agreement or rules of any group, association, organization, or corporation.

B. General Bidder has not directly or indirectly induced or solicited any other Bidder to submit a false or sham Bid. General Bidder has not solicited or induced any individual or entity to refrain from bidding;

C. General Bidder has not engaged in corrupt, fraudulent, collusive, or coercive practices in competing for the Contract. For the purposes of this Paragraph:

1. "corrupt practice" means the offering, giving, receiving, or soliciting of anything of value likely to influence the action of a public official in the bidding process;

2. "fraudulent practice" means an intentional misrepresentation of facts made (a) to influence the bidding process to the detriment of Owner, (b) to establish Bid prices at artificial non-competitive levels, or (c) to deprive Owner of the benefits of free and open competition;

3. "collusive practice" means a scheme or arrangement between two or more Bidders, with or without the knowledge of Owner, a purpose of which is to establish Bid prices at artificial, non-competitive levels; and

4. "coercive practice" means harming or threatening to harm, directly or indirectly, persons or their property to influence their participation in the bidding process or affect the execution of the Contract.

1.03 General Bidder's Certifications Required by Massachusetts General Law

A. General Bidder has submitted a certificate from the Secretary of State of the Commonwealth of Massachusetts that the corporation has complied with requirements of section 15.03 of subdivision A of Part 15 of chapter 156D and the date of compliance, and further has filed all annual reports required by section 16.22 of subdivision B of Part 16 of said chapter 156D if General Bidder is a foreign corporation. General Bidder certifies it will provide such certificate for each Subcontractor that is a foreign corporation if it receives a Notice of Award.

B. General Bidder has submitted a Certificate of Good Standing with respect to all returns due and taxes from the Commonwealth of Massachusetts Department of Revenue certifying General Bidder has complied with all laws of the relating to taxes, reporting of employees and contractors, and withholding and remitting of child support. General Bidder certifies it will provide such certificate for each Subcontractor if it receives a Notice of Award.

C. General Bidder certifies that if awarded the Contract, the following will be submitted prior to execution of the Agreement in accordance with MGL Chapter 30, Section 39R *Definitions; contract provisions; management and financial statements; enforcement.*

- A statement by management on internal accounting controls;
- A statement prepared by an independent certified public accountant regarding management's statement; and
- An audited financial statement for the most recent completed fiscal year.

D. General Bidder certifies that if awarded the Contract, any Work involving the removal, containment, or encapsulation of asbestos or material containing asbestos will only be performed by a licensed contractor in accordance with MGL Chapter 149, Section 6BA.

E. General Bidder is able to furnish labor that can work in harmony with all other elements of labor employed or to be employed in the Work and further certifies that all employees to be employed at the Work Site will have successfully completed a course in construction safety and health approved by the United States Occupational Safety and Health Administration that is at least 10 hours in duration at the time the employee begins Work and if General Bidder is awarded a Contract, shall furnish documentation of successful completion of said course with the first certified payroll report for each employee.

F. General Bidder will comply with the requirements of the Equal Employment Opportunity, Anti-discrimination, and Affirmative Action Program provisions in the Contract Documents, and if General Bidder is awarded a Contract, it shall incorporate these provisions into all subcontracts and Purchase Orders so that such provisions will be binding upon each Subcontractor or Supplier.

CERTIFIED BY GENERAL BIDDER ON:
By:
Authorized person per Form for General Bid and Annex

END OF SECTION

SECTION 00 45 05.01

SUB-BIDDER'S REPRESENTATIONS AND CERTIFICATIONS

The undersigned, under the penalties of perjury, certifies and represents the following which is made a condition of the general Bid.

1.01 Sub-Bidder's Representations

A. Sub-Bidder has examined and carefully studied the Bidding Documents and other related data identified in the Bidding Documents.

B. Sub-Bidder has visited the Site and become familiar with and is satisfied as to the general, local, and Site conditions that may affect cost, progress, and performance of the Work.

C. Sub-Bidder is familiar with and is satisfied as to all Laws and Regulations that may affect cost, progress, and performance of the Work.

D. Sub-Bidder has carefully studied all: (1) reports of explorations and tests of subsurface conditions at or contiguous to the Site and all drawings of physical conditions relating to existing surface or subsurface structures at the Site (except Underground Facilities) that have been identified in Section 00 73 10 of the Supplementary Conditions, Paragraph 4.02. as containing reliable "technical data," and (2) reports and drawings of Hazardous Environmental Conditions, if any, at the Site that have been identified in Section 00 73 10 of the Supplementary Conditions, Paragraph 4.06, as containing reliable "technical data."

E. Sub-Bidder has considered the information known to Sub-Bidder; information commonly known to contractors doing business in the locality of the Site; information and observations obtained from visits to the Site; the Bidding Documents; and the Site-related reports and drawings identified in the Bidding Documents, with respect to the effect of such information, observations, and documents on (1) the cost, progress, and performance of the Work; (2) the means, methods, techniques, sequences, and procedures of construction to be employed by Sub-Bidder, including applying the specific means, methods, techniques, sequences, and procedures of construction expressly required by the Bidding Documents; and (3) Sub-Bidder's safety precautions and programs.

F. Based on the information and observations referred to in Paragraph E above, Sub-Bidder does not consider that further examinations, investigations, explorations, tests, studies, or data are necessary for the determination of the sub-Bid for performance of the Work at the price(s) bid and within the times required, and in accordance with the other terms and conditions of the Bidding Documents.

G. Sub-Bidder is aware of the general nature of work to be performed by Owner and others at the Site that relates to the Work as indicated in the Bidding Documents.

H. Sub-Bidder has given Engineer written notice of all conflicts, errors, ambiguities, or discrepancies that Sub-Bidder has discovered in the Bidding Documents, and the written resolution thereof by Engineer is acceptable to Sub-Bidder.

I. The Bidding Documents are generally sufficient to indicate and convey understanding of all terms and conditions for the performance of the Work for which the Sub-Bid is submitted.

1.02 Sub-Bidder's Certifications

A. The sub-Bid is genuine and not made in the interest of or on behalf of any undisclosed individual or entity and is not submitted in conformity with any collusive agreement or rules of any group, association, organization, or corporation.

B. Sub-Bidder has not directly or indirectly induced or solicited any other Bidder to submit a false or sham Bid. Sub-Bidder has not solicited or induced any individual or entity to refrain from bidding;

C. Sub-Bidder has not engaged in corrupt, fraudulent, collusive, or coercive practices in competing for a subcontract. For the purposes of this Paragraph:

1. "corrupt practice" means the offering, giving, receiving, or soliciting of anything of value likely to influence the action of a public official in the bidding process;

2. "fraudulent practice" means an intentional misrepresentation of facts made (a) to influence the bidding process to the detriment of Owner, (b) to establish Bid prices at artificial non-competitive levels, or (c) to deprive Owner of the benefits of free and open competition;

3. "collusive practice" means a scheme or arrangement between two or more Bidders, with or without the knowledge of Owner, a purpose of which is to establish Bid prices at artificial, non-competitive levels; and

4. "coercive practice" means harming or threatening to harm, directly or indirectly, persons or their property to influence their participation in the bidding process or affect the execution of a subcontract.

1.03 Sub-Bidder's Certifications Required by Massachusetts General Law

A. Sub-Bidder has submitted a certificate from the Secretary of State of the Commonwealth of Massachusetts that the corporation has complied with requirements of section 15.03 of subdivision A of Part 15 of chapter 156D and the date of compliance, and further has filed all annual reports required by section 16.22 of subdivision B of Part 16 of said chapter 156D if Sub-Bidder is a foreign corporation. Sub-Bidder certifies it will provide such certificate to the Successful General Bidder receiving a Notice of Award if Sub-Bidder is included in that general Bid.

B. Sub-Bidder has submitted a Certificate of Good Standing with respect to all returns due and taxes from the Commonwealth of Massachusetts Department of Revenue certifying Sub-Bidder has complied with all laws of the relating to taxes, reporting of employees and contractors, and withholding and remitting of child support. Sub-Bidder certifies it will provide such certificate to the Successful General Bidder receiving a Notice of Award if Sub-Bidder is included in that general Bid.

C. Sub-Bidder certifies that if awarded a subcontract, any Work involving the removal, containment, or encapsulation of asbestos or material containing asbestos will only be performed by a licensed contractor in accordance with MGL Chapter 149, Section 6BA.

D. Sub-Bidder will comply with the Equal Employment Opportunity/Affirmative Action provisions in Section 00 73 36 of the Contract Documents, and if Sub-Bidder is awarded a subcontract, it shall incorporate these provisions into all subcontracts and Purchase Orders so that such provisions will be binding upon each Subcontractor or Supplier.

E. Sub-Bidder is able to furnish labor that can work in harmony with all other elements of labor employed or to be employed in the Work and further certifies that all employees to be employed at the Work Site will have successfully completed a course in construction safety and health approved by the United States Occupational Safety and Health Administration that is at least 10 hours in duration at the time the employee begins Work and if Sub-Bidder is awarded a subcontract, shall furnish documentation of successful completion of said course with the first certified payroll report for each employee.

F. Sub-Bidder will comply with the requirements of the Equal Employment Opportunity, Anti-discrimination, and Affirmative Action Program provisions in the Contract Documents, and if Sub-Bidder is awarded a subcontract, it shall incorporate these provisions into all subcontracts and Purchase Orders so that such provisions will be binding upon each subcontractor or supplier.

CERTIFIED BY SUB-BIDDER ON:
By:
Authorized person per Form for Sub-Bid and Annex

END OF SECTION

SECTION 00 45 19

NON-COLLUSION AFFIDAVIT

_____, being duly sworn, depose and, under the penalty of perjury, say that the following is true:

1. I am the person responsible within my firm for the final decision as to the price(s) and amount of this Bid or, if not, that I have written authorization, enclosed herewith, from that person to make the statements set out below on his or her behalf and on the behalf of my firm.

2. The price(s) and amount of this Bid have been arrived at independently, without collusion, consultation, communication, or agreement for the purpose of restricting competition with any other contractor, competitor, Bidder, or potential Bidder.

3. Unless otherwise required by law, neither the price(s) nor the amount of this Bid have been disclosed to any other firm or person who is a Bidder, competitor, or potential Bidder on the Project, and will not be so disclosed either directly or indirectly prior to Bid opening.

4. No attempt has been made or will be made to solicit, cause, or induce any firm, partnership, corporation, or person to submit or not submit a Bid on this Project, or to submit a Bid higher than the Bid of this firm, or submit an intentionally high or noncompetitive Bid or other form of complementary Bid, or for the purpose of restricting competition.

5. The Bid of my firm is made in good faith and not pursuant to any agreement or discussion with, or inducement from, any firm or person to submit a complementary Bid.

6. My firm has not offered or entered into a subcontracting agreement regarding the purchase of materials or services from any firm or person, or offered, promised, or paid cash or anything of value to any firm or person, whether in connection with this or any other Project, in consideration for an agreement or promise by any firm or person to refrain from proposing or to submit a complementary Bid on the Project.

7. My firm has not accepted nor been promised any subcontract or agreement regarding the sale of materials or services to any firm or person, and has not been promised or paid cash or anything of value to any firm or person, whether in connection with this or any other project, in consideration for my firm's submitting a complementary Bid or agreeing to do so, on the Project.

8. I have made a diligent inquiry of all members, officers, employees, and agents of my firm with responsibilities relating to the preparation, approval, or submission of my firm's Bid on the Project and have been advised by each of them that he or she has not participated in any communication, consultation, discussion, agreement, collusion, act, or other conduct inconsistent with any of the statements and representations made in this affidavit.

_____
Company Name

_____
Signature

_____
Company Position

Date: _____

Attest: _____

Date: _____

END OF SECTION

SECTION 00 45 55

DCAMM PRIME/GENERAL CONTRACTOR UPDATE STATEMENT

Required Update Statement (10 pages) included on the following pages.

Electronic version available at http://www.mass.gov/anf/property-mgmt-and-construction/design-and-construction-of-public-bldgs/contractor-certification/prime-general-sub-contract-update-statements.html

END OF SECTION

This page intentionally left blank

SPECIAL NOTICE TO AWARDING AUTHORITY
BIDDERS' UPDATE STATEMENTS ARE NOT PUBLIC RECORDS AND ARE NOT OPEN TO PUBLIC INSPECTION (M.G.L. C.149, §44D)

EFFECTIVE MARCH 30, 2010

Commonwealth of Massachusetts
Division of Capital Asset Management
PRIME/GENERAL CONTRACTOR UPDATE STATEMENT

TO ALL BIDDERS AND AWARDING AUTHORITIES

A COMPLETED AND SIGNED PRIME/GENERAL CONTRACTOR UPDATE STATEMENT MUST BE SUBMITTED WITH EVERY PRIME/GENERAL BID FOR A CONTRACT PURSUANT TO M.G.L. c.149, §44A AND M.G.L. c. 149A. ANY PRIME/GENERAL BID SUBMITTED WITHOUT AN APPROPRIATE UPDATE STATEMENT IS INVALID AND MUST BE REJECTED.

Caution: This form is to be used for submitting Prime/General Contract bids. It is not to be used for submitting Filed Sub-Bids or Trade Sub-Bids.

AWARDING AUTHORITIES

If the Awarding Authority determines that the bidder does not demonstrably possess the skill, ability, and integrity necessary to perform the work on the project, it must reject the bid.

BIDDER'S AFFIDAVIT

I swear under the pains and penalties of perjury that I am duly authorized by the bidder named below to sign and submit this Prime/General Contractor Update Statement on behalf of the bidder named below, that I have read this Prime/General Contractor Update Statement, and that all of the information provided by the bidder in this Prime/General Contractor Update Statement is true, accurate, and complete as of the bid date.

Bid Date	Print Name of Prime/General Contractor
Project Number (or name if no number)	Business Address
Awarding Authority	Telephone Number

SIGNATURE⇨ _____

Bidder's Authorized Representative

INSTRUCTIONS

INSTRUCTIONS TO BIDDERS

- This form must be completed and submitted by all Prime/General contractors bidding on projects pursuant to M.G.L. c. 149, §44A and M.G.L. c. 149A.
- You must give complete and accurate answers to all questions and provide all of the information requested. MAKING A MATERIALLY FALSE STATEMENT IN THIS UPDATE STATEMENT IS GROUNDS FOR REJECTING YOUR BID AND FOR DEBARRING YOU FROM ALL PUBLIC CONTRACTING.
- **This Update Statement must include all requested information that was not previously reported on the Application used for your firm's most recently issued (not extended or amended) Prime/General Contractor Certificate of Eligibility. The Update Statement must cover the entire period since the date of your Application, NOT since the date of your Certification.**
- You must use this official form of Update Statement. Copies of this form may be obtained from the awarding authority and from the Asset Management Web Site: www.mass.gov/dcam .
- If additional space is needed, please copy the appropriate page of this Update Statement and attach it as an additional sheet.
- See the section entitled "Bidding Limits" in the *Instructions to Awarding Authorities* for important information concerning your bidding limits.

INSTRUCTIONS TO AWARDING AUTHORITIES

Determination of Bidder Qualifications

- It is the awarding authority's responsibility to determine who is the lowest eligible and responsible bidder. You must consider all of the information in the low bidder's Update Statement in making this determination. Remember: this information was not available to the Division of Capital Asset Management at the time of certification.
- The bidder's performance on the projects listed in Parts 1 and 2 must be part of your review. Contact the project references.
- AWARDING AUTHORITIES ARE STRONGLY ENCOURAGED TO REVIEW THE LOW BIDDER'S ENTIRE CERTIFICATION FILE AT THE DIVISION OF CAPITAL ASSET MANAGEMENT. Telephone (617) 727-9320 for an appointment.

Bidding Limits

Single Project Limit: The total amount of the bid, including all alternates, may not exceed the bidder's Single Project Limit.

Aggregate Work Limit: The annual value of the work to be performed on the contract for which the bid is submitted, when added to the annual cost to complete the bidder's other currently held contracts, may not exceed the bidder's Aggregate Work Limit. Use the following procedure to determine whether the low bidder is within its Aggregate Work Limit:

Step 1 Review Update Statement Question #2 to make sure that all requested information is provided and that the bidder has accurately calculated and totaled the annualized value of all incomplete work on its currently held contracts (column 9).

Step 2 Determine the annual dollar value of the work to be performed on your project. This is done as follows:

(i) If the project is to be completed in less than 12 months, the annual dollar value of the work is equal to the full amount of the bid.

(ii) If the project will take more than 12 months to complete, calculate the number of years given to complete the project by dividing the total number of months in the project schedule by 12 (calculate to 3 decimal places), then divide the amount of the bid by the calculated number of years to find the annual dollar value of the work.

Step 3 Add the annualized value of all of the bidder's incomplete contract work (the total of column 9 on page 5) to the annual dollar value of the work to be performed on your project. **The total may not exceed the bidder's Aggregate Work Limit.**

Correction of Errors and Omissions in Update Statements

Matters of Form: An awarding authority shall not reject a contractor's bid because there are mistakes or omissions of form in the Update Statement submitted with the bid, provided the contractor promptly corrects those mistakes or omissions upon request of the awarding authority. [810 CMR 8.05(1)].

Correction of Other Defects: An awarding authority may, in its discretion, give a contractor notice of defects, other than mistakes or omissions of form, in the contractor's Update Statement, and an opportunity to correct such defects, provided the correction of such defects is not prejudicial to fair competition. An awarding authority may reject a corrected Update Statement if it contains unfavorable information about the contractor that was omitted from the Update Statement filed with the contractor's bid. [810 CMR 8.05(2)].

PART 1 - COMPLETED PROJECTS

LIST ALL PUBLIC AND PRIVATE *BUILDING* PROJECTS YOUR FIRM HAS COMPLETED SINCE THE DATE OF APPLICATION FOR YOUR MOST RECENTLY ISSUED (NOT EXTENDED OR AMENDED) DCAM CERTIFICATE OF ELIGIBILITY. YOU MUST REPORT ALL REQUESTED INFORMATION NOT PREVIOUSLY REPORTED ON THAT DCAM APPLICATION*.

PROJECT TITLE & LOCATION	WORK CATEGORY	CONTRACT PRICE	START DATE	DATE COMPLETED

Attach additional sheets if necessary

* If your firm has been terminated from a project prior to completion of the work or has failed or refused to complete its work under any contract, full details and an explanation must be provided. See Part 3 of this Update Statement.

PROVIDE THE FOLLOWING REFERENCE INFORMATION FOR EACH COMPLETED PROJECT LISTED ON THE PREVIOUS PAGE.

PROJECT TITLE	COMPANY NAME	CONTACT PERSON	TELEPHONE
	OWNER: Owner	Contact Person	Telephone
	DESIGNER: Designer	Contact Person	Telephone
	GC: GC	Contact Person	Telephone
	OWNER: Owner	Contact Person	Telephone
	DESIGNER: Designer	Contact Person	Telephone
	GC: GC	Contact Person	Telephone
	OWNER: Owner	Contact Person	Telephone
	DESIGNER: Designer	Contact Person	Telephone
	GC: GC	Contact Person	Telephone
	OWNER: Owner	Contact Person	Telephone
	DESIGNER: Designer	Contact Person	Telephone
	GC: GC	Contact Person	Telephone
	OWNER: Owner	Contact Person	Telephone
	DESIGNER: Designer	Contact Person	Telephone
	GC: GC	Contact Person	Telephone
	OWNER: Owner	Contact Person	Telephone
	DESIGNER: Designer	Contact Person	Telephone
	GC: GC	Contact Person	Telephone

Is your company or any individual who owns, manages or controls your company affiliated with any owner, designer or general contractor named above, either through a business or family relationship? ☐ YES ☐ NO

Are any of the contact persons named above affiliated with your company or any individual who owns, manages or control your company, either through a business or family relationship? ☐ YES ☐ NO

If you have answered YES to either question, explain. _____

PART 2 - CURRENTLY HELD CONTRACTS

LIST ALL PUBLIC AND PRIVATE BUILDING AND NON-BUILDING *CONSTRUCTION* PROJECTS YOUR FIRM HAS UNDER CONTRACT ON THIS DATE REGARDLESS OF WHEN OR WHETHER THE WORK COMMENCED.

1	2	3	4	5	6	7	8	9
PROJECT TITLE & LOCATION	WORK CATEGORY	START AND END DATES	ON SCHEDULE (yes / no)	CONTRACT PRICE	% NOT COMPLETE	$ VALUE OF WORK NOT COMPLETE (col. 5 X col. 6)	NO. OF YEARS REMAINING (see note below)	ANNUALIZED VALUE OF INCOMPLETE WORK (col. 7 ÷ col. 8) (divided by)

ANNUALIZED VALUE OF ALL INCOMPLETE CONTRACT WORK (Total of Column 9) $_____

Column 8
- If less than one year is left in the project schedule, write 1.
- If more than 12 months are left in the project schedule, divide the number of months left in the project schedule by 12 (calculate to three decimal places).

PROVIDE THE FOLLOWING REFERENCE INFORMATION FOR EACH INCOMPLETE PROJECT LISTED ON THE PREVIOUS PAGE.

PROJECT TITLE	COMPANY NAME	CONTACT PERSON	TELEPHONE
	OWNER: Owner	Contact Person	Telephone
	DESIGNER: Designer	Contact Person	Telephone
	GC: GC	Contact Person	Telephone
	OWNER: Owner	Contact Person	Telephone
	DESIGNER: Designer	Contact Person	Telephone
	GC: GC	Contact Person	Telephone
	OWNER: Owner	Contact Person	Telephone
	DESIGNER: Designer	Contact Person	Telephone
	GC: GC	Contact Person	Telephone
	OWNER: Owner	Contact Person	Telephone
	DESIGNER: Designer	Contact Person	Telephone
	GC: GC	Contact Person	Telephone
	OWNER: Owner	Contact Person	Telephone
	DESIGNER: Designer	Contact Person	Telephone
	GC: GC	Contact Person	Telephone
	OWNER: Owner	Contact Person	Telephone
	DESIGNER: Designer	Contact Person	Telephone
	GC: GC	Contact Person	Telephone

Is your company or any individual who owns, manages or controls your company affiliated with any owner, designer or general contractor named above either through a business or family relationship? ☐ YES ☐ NO

Are any of the contact persons named above affiliated with your company or any individual who owns, manages or control your company, either through a business or family relationship? ☐ YES ☐ NO

If you have answered YES to either question, explain. _____

PART 3 - PROJECT PERFORMANCE

For Parts 3 and 4, if you answer YES to any question, please provide on a separate page a complete explanation. Information you provide herein must supplement the Application for your most recently issued (not extended or amended) DCAM Certificate of Eligibility. You must report all requested information not previously reported on that DCAM Application for Prime/General Certificate of Eligibility. Include all details [project name(s) and location(s), names of all parties involved, relevant dates, etc.].

	YES	NO
1. Has your firm been terminated on any contract prior to completing a project or has any officer, partner or principal of your firm been an officer, partner or principal of another firm that was terminated or failed to complete a project?	☐	☐
2. Has your firm failed or refused either to perform or complete any of its work under any contract prior to substantial completion?	☐	☐
3. Has your firm failed or refused to complete any punch list work under any contract?	☐	☐
4. Has your firm filed for bankruptcy, or has any officer, principal or individual with a financial interest in your current firm been an officer, principal or individual with a financial interest in another firm that filed for bankruptcy?	☐	☐
5. Has your surety taken over or been asked to complete any of your work under any contract?	☐	☐
6. Has a payment or performance bond been invoked against your current firm, or has any officer, principal or individual with a financial interest in your current firm been an officer, principal or individual with a financial interest in another firm that had a payment or performance bond invoked?	☐	☐
7. Has your surety made payment to a materials supplier or other party under your payment bond on any contract?	☐	☐
8. Has any subcontractor filed a demand for direct payment with an awarding authority for a public project on any of your contracts?	☐	☐
9. Have any of your subcontractors or suppliers filed litigation to enforce a mechanic's lien against property in connection with work performed or materials supplied under any of your contracts?	☐	☐
10. Have there been any deaths of an employee or others occurring in connection with any of your projects?	☐	☐
11. Has any employee or other person suffered an injury in connection with any of your projects resulting in their inability to return to work for a period in excess of one year?	☐	☐

PART 4 - Legal or Administrative Proceedings; Compliance with Laws

Please answer the following questions. Information must supplement all judicial and administrative proceedings involving bidder's firm, which were instituted or concluded (adversely or otherwise) since your firm's Application for your most recently issued (not extended or amended) Certificate of Eligibility. You must report all requested information not previously reported on that DCAM Application for Prime/General Certificate of Eligibility.

The term "administrative proceeding" as used in this Prime/General Contractor Update Statement includes (i) any action taken or proceeding brought by a governmental agency, department or officer to enforce any law, regulation, code, legal, or contractual requirement, except for those brought in state or federal courts, or (ii) any action taken by a governmental agency, department or officer imposing penalties, fines or other sanctions for failure to comply with any such legal or contractual requirement.

The term "anyone with a financial interest in your firm" as used in this Section "I", shall mean any person and/or entity with a 5% or greater ownership interest in the applicant's firm.

If you answer YES to any question, on a separate page provide a complete explanation of each proceeding or action and any judgment, decision, fine or other sanction or result. Include all details (name of court or administrative agency, title of case or proceeding, case number, date action was commenced, date judgment or decision was entered, fines or penalties imposed, etc.).

	YES	NO
1. Have any civil, judicial or administrative proceedings involving your firm or a principal or officer or anyone with a financial interest in your firm been brought, concluded, or settled relating to the procurement or performance of any construction contract, including but not limited to actions to obtain payment brought by subcontractors, suppliers or others?	☐	☐
2. Have any criminal proceedings involving your firm or a principal or officer or anyone with a financial interest in your firm been brought, concluded, or settled relating to the procurement or performance of any construction contract including, but not limited to, any of the following offenses: fraud, graft, embezzlement, forgery, bribery, falsification or destruction of records, or receipt of stolen property?	☐	☐
3. Have any judicial or administrative proceedings involving your firm or a principal or officer or anyone with a financial interest in your firm been brought, concluded, or settled relating to a violation of any state's or federal procurement laws arising out of the submission of bids or proposals?	☐	☐
4. Have any judicial or administrative proceedings involving your firm or a principal or officer or anyone with a financial interest in your firm been brought, concluded, or settled relating to a violation of M.G.L. Chapter 268A, the State Ethics Law?	☐	☐

PART 4 - Legal or Administrative Proceedings; Compliance with Laws (continued)

	YES	NO
5. Have any judicial or administrative proceedings involving your firm or a principal or officer or anyone with a financial interest in your firm been brought, concluded, or settled relating to a violation of any state or federal law regulating hours of labor, unemployment compensation, minimum wages, prevailing wages, overtime pay, equal pay, child labor or worker's compensation?	☐	☐
6. Have any judicial or administrative proceedings involving your firm or a principal or officer or anyone with a financial interest in your firm been brought, concluded, or settled relating to a violation of any state or federal law prohibiting discrimination in employment?	☐	☐
7. Have any judicial or administrative proceedings involving your firm or a principal or officer or anyone with a financial interest in your firm been brought, concluded, or settled relating to a claim of repeated or aggravated violation of any state or federal law regulating labor relations?	☐	☐
8. Have any proceedings by a municipal, state, or federal agency been brought, concluded, or settled relating to decertification, debarment, or suspension of your firm or any principal or officer or anyone with a financial interest in your firm from public contracting?	☐	☐
9. Have any judicial or administrative proceedings involving your firm or a principal or officer or anyone with a financial interest in your firm been brought, concluded, or settled relating to a violation of state or federal law regulating the environment?	☐	☐
10. Has your firm been fined by OSHA or any other state or federal agency for violations of any laws or regulations related to occupational health or safety? Note: this information may be obtained from OSHA's Web Site at www.osha.gov	☐	☐
11. Has your firm been sanctioned for failure to achieve DBE/MBE/WBE goals, workforce goals, or failure to file certified payrolls on any public projects?	☐	☐
12. Other than previously reported in the above paragraphs of this Section I, have any administrative proceedings or investigations involving your firm or a principal or officer or anyone with a financial interest in your firm been brought, concluded, or settled by any local, state or federal agency relating to the procurement or performance of any construction contract?	☐	☐
13. Are there any other issues that you are aware which may affect your firm's responsibility and integrity as a building contractor?	☐	☐

PART 5 - SUPERVISORY PERSONNEL

List all supervisory personnel, such as project managers and superintendents, who will be assigned to the project if your firm is awarded the contract. **Attach the resume of each person listed below.**

NAME	TITLE OR FUNCTION

PART 6 - CHANGES IN BUSINESS ORGANIZATION OR FINANCIAL CONDITION

Have there been any changes in your firm's business organization, financial condition or bonding capacity since the date your current Certificate of Eligibility was issued? ☐ Yes ☐ No
If YES, attach a separate page providing complete details.

PART 7 – LIST OF COMPLETED CONSTRUCTION PROJECTS SUBMITTED TO THE DIVISION OF CAPITAL ASSET MANAGEMENT.

Attach here a copy of the list of completed construction projects which was submitted with your firm's DCAM Application for your most recently issued (not extended or amended) DCAM Certificate of Eligibility. The Attachment must include a complete copy of the entire Section G – "Completed Projects" and the final page – "Certification" (Section J) containing the signature and date that the Completed Projects list (Section G) was submitted to the Division of Capital Asset Management.

SECTION 00 45 56

DCAMM SUB-BIDDER UPDATE STATEMENT

Required Update Statement (10 pages) included on the following pages.

Electronic version available at http://www.mass.gov/anf/property-mgmt-and-construction/design-and-construction-of-public-bldgs/contractor-certification/prime-general-sub-contract-update-statements.html

END OF SECTION

This page intentionally left blank

SPECIAL NOTICE TO AWARDING AUTHORITY
SUB-BIDDERS' UPDATE STATEMENTS ARE NOT PUBLIC RECORDS AND ARE NOT OPEN TO PUBLIC INSPECTION (M.G.L. C.149, §44D)

EFFECTIVE MARCH 30, 2010

Commonwealth of Massachusetts
Division of Capital Asset Management

SUB-BIDDER
UPDATE STATEMENT

TO ALL SUB-BIDDERS, TRADE CONTRACTORS AND AWARDING AUTHORITIES

A COMPLETED AND SIGNED SUB-BIDDER UPDATE STATEMENT MUST BE SUBMITTED WITH EVERY FILED SUB-BID PURSUANT TO M.G.L. c.149, §44F AND EVERY TRADE SUB-BID PURSUANT TO M.G.L. c. 149A. ANY FILED SUB-BID OR TRADE SUB-BID SUBMITTED WITHOUT AN APPROPRIATE SUB-BIDDER UPDATE STATEMENT IS INVALID AND MUST BE REJECTED.

Caution: This form is to be used for submitting Filed Sub-Bids and Trade Sub-Bids. It is not to be used for submitting Prime/General Contract bids.

AWARDING AUTHORITIES

If the Awarding Authority determines that the sub-bidder is not competent to perform the work as specified on the project, it should reject the bid.

SUB-BIDDER'S AFFIDAVIT

I swear under the pains and penalties of perjury that I am duly authorized by the bidder named below to sign and submit this Sub-bidder Update Statement on behalf of the bidder named below, that I have read this Sub-bidder Update Statement, and that all of the information provided by the bidder in this Sub-bidder Update Statement is true, accurate, and complete as of the bid date.

Bid Date	Print Name of Sub-bidder or Trade Contractor
Project Number (or name if no number)	Business Address
Awarding Authority	Telephone Number

SIGNATURE⇨ _____
Bidder's Authorized Representative

INSTRUCTIONS

INSTRUCTIONS TO SUB-BIDDERS

- This form must be completed and submitted by all Filed Sub-Bidders bidding on projects pursuant to M.G.L. c. 149, §44F and Trade Contractors bidding on projects pursuant to M.G.L. c. 149A.
- You must give complete and accurate answers to all questions and provide all of the information requested. MAKING A MATERIALLY FALSE STATEMENT IN THIS SUB-BIDDER UPDATE STATEMENT IS GROUNDS FOR REJECTING YOUR BID AND FOR DEBARRING YOU FROM ALL PUBLIC CONTRACTING.
- **This Sub-Bidder Update Statement must include all requested information that was not previously reported on the Application used for your firm's most recently issued (not extended or amended) Sub-Bidder Certificate of Eligibility. The Sub-Bidder Update Statement must cover the entire period since the date of that Application, NOT since the date of your Certification.**
- You must use this official form of Sub-bidder Update Statement. Copies of this form may be obtained from the awarding authority and from the DCAM Web Site: www.mass.gov/dcam .
- If additional space is needed, please copy the appropriate page of this Sub-bidder Update Statement and attach it as an additional sheet.

INSTRUCTIONS TO AWARDING AUTHORITIES

Determination of Sub-Bidder Qualifications

- It is the awarding authority's responsibility to determine each responsible bidder. You must consider all of the information in the bidder's Sub-bidder Update Statement in making this determination. Remember: this information was not available to the Division of Capital Asset Management at the time of certification.
- The sub-bidder's performance on the projects listed in Parts 1 and 2 must be part of your review. Contact the project references.
- AWARDING AUTHORITIES ARE STRONGLY ENCOURAGED TO REVIEW THE SUB-BIDDER'S ENTIRE CERTIFICATION FILE AT THE DIVISION OF CAPITAL ASSET MANAGEMENT. Telephone (617) 727-9320 for an appointment.

Correction of Errors and Omissions in Sub-bidder Update Statements

Matters of Form: An awarding authority shall not reject a sub-bidder's bid because there are mistakes or omissions of form in the Sub-bidder Update Statement submitted with the bid pursuant to M.G.L. c.149, §44D, provided the sub-bidder promptly corrects those mistakes or omissions upon request of the awarding authority. [810 CMR 8.13(1)].

Correction of Other Defects: An awarding authority may, in its discretion, give a sub-bidder notice of minor defects and omissions as to form in the Sub-bidder's Update Statement and provide an opportunity to correct its Sub-bidder Update Statement. However, the sub-bidder shall not be allowed to make corrections to a Sub-bidder Update Statement if material information about the sub-bidder was omitted from the Sub-bidder Update Statement filed with the sub-bidder's bid. The Awarding Authority shall advise DCAM of any material omissions in a Sub-bidder's Update Statement.. [810 CMR 8.13(2)].

PART 1 - COMPLETED PROJECTS

LIST ALL PUBLIC AND PRIVATE PROJECTS OF $20,000 OR MORE THAT YOUR FIRM HAS COMPLETED SINCE THE DATE OF APPLICATION FOR YOUR MOST RECENTLY ISSUED (NOT EXTENDED OR AMENDED) SUB-BIDDER CERTIFICATE OF ELIGIBILITY*.

PROJECT TITLE & LOCATION	WORK CATEGORY	CONTRACT PRICE	START DATE	DATE COMPLETED

Attach additional sheets if necessary

* If your firm has been terminated from a project prior to completion of the work or has failed or refused to complete its work under any contract, full details and an explanation must be provided. See Part 3 of this Sub-bidder Update Statement.

PROVIDE THE FOLLOWING REFERENCE INFORMATION FOR EACH COMPLETED PROJECT LISTED ON THE PREVIOUS PAGE.

PROJECT TITLE	COMPANY NAME	CONTACT PERSON	TELEPHONE
	OWNER: Owner	Contact Person	Telephone
	DESIGNER: Designer	Contact Person	Telephone
	GC: GC	Contact Person	Telephone
	OWNER: Owner	Contact Person	Telephone
	DESIGNER: Designer	Contact Person	Telephone
	GC: GC	Contact Person	Telephone
	OWNER: Owner	Contact Person	Telephone
	DESIGNER: Designer	Contact Person	Telephone
	GC: GC	Contact Person	Telephone
	OWNER: Owner	Contact Person	Telephone
	DESIGNER: Designer	Contact Person	Telephone
	GC: GC	Contact Person	Telephone
	OWNER: Owner	Contact Person	Telephone
	DESIGNER: Designer	Contact Person	Telephone
	GC: GC	Contact Person	Telephone
	OWNER: Owner	Contact Person	Telephone
	DESIGNER: Designer	Contact Person	Telephone
	GC: GC	Contact Person	Telephone

Is your company or any individual who owns, manages or controls your company affiliated with any owner, designer or general contractor named above, either through a business or family relationship? ☐ YES ☐ NO

Are any of the contact persons named above affiliated with your company or any individual who owns, manages or control your company, either through a business or family relationship? ☐ YES ☐ NO

If you have answered YES to either question, explain. _____

PART 2 - CURRENTLY HELD CONTRACTS

LIST ALL PUBLIC AND PRIVATE PROJECTS OF $20,000 OR MORE THAT YOUR FIRM HAS UNDER CONTRACT ON THIS DATE REGARDLESS OF WHEN OR WHETHER THE WORK COMMENCED.

1	2	3	4	5	6	7
PROJECT TITLE & LOCATION	WORK CATEGORY	START AND END DATES	ON SCHEDULE (yes / no)	CONTRACT PRICE	% NOT COMPLETE	$ VALUE OF WORK NOT COMPLETE (col. 5 X col. 6)

PROVIDE THE FOLLOWING REFERENCE INFORMATION FOR EACH INCOMPLETE PROJECT LISTED ON THE PREVIOUS PAGE.

PROJECT TITLE	COMPANY NAME	CONTACT PERSON	TELEPHONE
	OWNER: Owner	Contact Person	Telephone
	DESIGNER: Designer	Contact Person	Telephone
	GC: GC	Contact Person	Telephone
	OWNER: Owner	Contact Person	Telephone
	DESIGNER: Designer	Contact Person	Telephone
	GC: GC	Contact Person	Telephone
	OWNER: Owner	Contact Person	Telephone
	DESIGNER: Designer	Contact Person	Telephone
	GC: GC	Contact Person	Telephone
	OWNER: Owner	Contact Person	Telephone
	DESIGNER: Designer	Contact Person	Telephone
	GC: GC	Contact Person	Telephone
	OWNER: Owner	Contact Person	Telephone
	DESIGNER: Designer	Contact Person	Telephone
	GC: GC	Contact Person	Telephone
	OWNER: Owner	Contact Person	Telephone
	DESIGNER: Designer	Contact Person	Telephone
	GC: GC	Contact Person	Telephone

Is your company or any individual who owns, manages or controls your company affiliated with any owner, designer or general contractor named above either through a business or family relationship? ☐ YES ☐ NO

Are any of the contact persons named above affiliated with your company or any individual who owns, manages or control your company, either through a business or family relationship? ☐ YES ☐ NO

If you have answered YES to either question, explain. _____

PART 3 - PROJECT PERFORMANCE

For Parts 3 and 4, if you answer YES to any question, please provide on a separate page a complete explanation. Information you provide herein must supplement the Application for your most recently issued (not extended or amended) Sub-Bidder Certificate of Eligibility. You must report all requested information not previously reported on that Application. Include all details [project name(s) and location(s), names of all parties involved, relevant dates, etc.].

	YES	NO
1. Has your firm been terminated on any contract prior to completing a project or has any officer, partner or principal of your firm been an officer, partner or principal of another firm that was terminated or failed to complete a project?	☐	☐
2. Has your firm failed or refused either to perform or complete any of its work under any contract prior to substantial completion?	☐	☐
3. Has your firm failed or refused to complete any punch list work under any contract?	☐	☐
4. Has your firm filed for bankruptcy, or has any officer, principal or individual with a financial interest in your current firm been an officer, principal or individual with a financial interest in another firm that filed for bankruptcy?	☐	☐
5. Has your surety taken over or been asked to complete any of your work under any contract?	☐	☐
6. Has a payment or performance bond been invoked against your current firm, or has any officer, principal or individual with a financial interest in your current firm been an officer, principal or individual with a financial interest in another firm that had a payment or performance bond invoked?	☐	☐
7. Has your surety made payment to a materials supplier or other party under your payment bond on any contract?	☐	☐
8. Has any subcontractor filed a demand for direct payment with an awarding authority for a public project on any of your contracts?	☐	☐
9. Have any of your subcontractors or suppliers filed litigation to enforce a mechanic's lien against property in connection with work performed or materials supplied under any of your contracts?	☐	☐
10. Have there been any deaths of an employee or others occurring in connection with any of your projects?	☐	☐
11. Has any employee or other person suffered an injury in connection with any of your projects resulting in their inability to return to work for a period in excess of one year?	☐	☐

PART 4 - Legal or Administrative Proceedings; Compliance with Laws

Please answer the following questions. Information must supplement all judicial and administrative proceedings involving bidder's firm, which were instituted or concluded (adversely or otherwise) since your firm's Application for your most recently issued (not extended or amended) Sub-Bidder Certificate of Eligibility. You must report all requested information not previously reported on that DCAM Application.

The term "administrative proceeding" as used in this Sub-Bidder Update Statement includes (i) any action taken or proceeding brought by a governmental agency, department or officer to enforce any law, regulation, code, legal, or contractual requirement, except for those brought in state or federal courts, or (ii) any action taken by a governmental agency, department or officer imposing penalties, fines or other sanctions for failure to comply with any such legal or contractual requirement.

The term "anyone with a financial interest in your firm" as used in this Section "I", shall mean any person and/or entity with a 5% or greater ownership interest in the applicant's firm.

If you answer YES to any question, on a separate page provide a complete explanation of each proceeding or action and any judgment, decision, fine or other sanction or result. Include all details (name of court or administrative agency, title of case or proceeding, case number, date action was commenced, date judgment or decision was entered, fines or penalties imposed, etc.).

	YES	NO
1. Have any civil, judicial or administrative proceedings involving your firm or a principal or officer or anyone with a financial interest in your firm been brought, concluded, or settled relating to the procurement or performance of any construction contract, including but not limited to actions to obtain payment brought by subcontractors, suppliers or others?	☐	☐
2. Have any criminal proceedings involving your firm or a principal or officer or anyone with a financial interest in your firm been brought, concluded, or settled relating to the procurement or performance of any construction contract including, but not limited to, any of the following offenses: fraud, graft, embezzlement, forgery, bribery, falsification or destruction of records, or receipt of stolen property?	☐	☐
3. Have any judicial or administrative proceedings involving your firm or a principal or officer or anyone with a financial interest in your firm been brought, concluded, or settled relating to a violation of any state's or federal procurement laws arising out of the submission of bids or proposals?	☐	☐
4. Have any judicial or administrative proceedings involving your firm or a principal or officer or anyone with a financial interest in your firm been brought, concluded, or settled relating to a violation of M.G.L. Chapter 268A, the State Ethics Law?	☐	☐

PART 4 - Legal or Administrative Proceedings; Compliance with Laws (continued)

	YES	NO
5. Have any judicial or administrative proceedings involving your firm or a principal or officer or anyone with a financial interest in your firm been brought, concluded, or settled relating to a violation of any state or federal law regulating hours of labor, unemployment compensation, minimum wages, prevailing wages, overtime pay, equal pay, child labor or worker's compensation?	☐	☐
6. Have any judicial or administrative proceedings involving your firm or a principal or officer or anyone with a financial interest in your firm been brought, concluded, or settled relating to a violation of any state or federal law prohibiting discrimination in employment?	☐	☐
7. Have any judicial or administrative proceedings involving your firm or a principal or officer or anyone with a financial interest in your firm been brought, concluded, or settled relating to a claim of repeated or aggravated violation of any state or federal law regulating labor relations?	☐	☐
8. Have any proceedings by a municipal, state, or federal agency been brought, concluded, or settled relating to decertification, debarment, or suspension of your firm or any principal or officer or anyone with a financial interest in your firm from public contracting?	☐	☐
9. Have any judicial or administrative proceedings involving your firm or a principal or officer or anyone with a financial interest in your firm been brought, concluded, or settled relating to a violation of state or federal law regulating the environment?	☐	☐
10. Has your firm been fined by OSHA or any other state or federal agency for violations of any laws or regulations related to occupational health or safety? Note: this information may be obtained from OSHA's Web Site at www.osha.gov	☐	☐
11. Has your firm been sanctioned for failure to achieve DBE/MBE/WBE goals, workforce goals, or failure to file certified payrolls on any public projects?	☐	☐
12. Other than previously reported in the above paragraphs of this Section I, have any administrative proceedings or investigations involving your firm or a principal or officer or anyone with a financial interest in your firm been brought, concluded, or settled by any local, state or federal agency relating to the procurement or performance of any construction contract?	☐	☐
13. Are there any other issues that you are aware which may affect your firm's responsibility and integrity as a building contractor?	☐	☐

PART 5 - SUPERVISORY PERSONNEL

List all supervisory personnel who will be assigned to the project if your firm is awarded the contract. **Attach the resume of each person listed below.**

NAME	TITLE OR FUNCTION

PART 6 - CHANGES IN BUSINESS ORGANIZATION OR FINANCIAL CONDITION

Have there been any changes in your firm's business organization, financial condition or bonding capacity since the date your current Certificate of Eligibility was issued? ☐ Yes ☐ No
If YES, attach a separate page providing complete details.

PART 7 – LIST OF COMPLETED CONSTRUCTION PROJECTS SUBMITTED TO THE DIVISION OF CAPITAL ASSET MANAGEMENT ALONG WITH CERTIFICATION PAGE.

Attach here a copy of the list of completed construction projects which was submitted with your firm's Application for your most recently issued (not extended or amended) Sub-Bidder Certificate of Eligibility. The Attachment must include a complete copy of the entire Section F – "Completed Projects" (Section G – "Completed Projects" for firms certified based upon their Prime/General Application), and the final page – "Certification Page", (Section I in the Sub-bidder Application or Section J in Prime/General Application) containing the signature and date that the Completed Projects list (Section F or G) was submitted to the Division of Capital Asset Management.

SAMPLE NOTICE OF AWARD (C-00 51 00)

Date: _____

Project:

Owner: Owner's Contract No.:

Contract: Engineer's Project No.:

Bidder:

Bidder's Address:

You are notified that your Bid dated [_____]for the above Contract has been considered. You are the Successful Bidder and are awarded a Contract for [_____] subject to the following conditions being met and subject to required reviews and approvals.

The Contract Price of your Contract is _____ Dollars ($_____).

You must comply with the following conditions precedent **within 10 days** of the date you receive this Notice of Award.

1. Deliver the Contract security (Bonds) as specified in the General Conditions and Supplementary Conditions (Articles 2 and 5);
2. Deliver the insurance certificates indicating coverages as specified in the General Conditions and Supplementary Conditions (Articles 2 and 5);
3. Deliver the following completed and executed certifications and documents:
    a. Pursuant to MGL Chapter 30, Section 39R *Definitions; contract provisions; management and financial statements; enforcement* per Section 00 22 13:
        - A statement by management on internal accounting controls (sample attached);
        - A statement prepared by an independent certified public accountant regarding management's statement (sample attached); and
        - An audited financial statement for the most recent completed fiscal year.
    b. From each Subcontractor:
        - Certificate of Good Standing from the Department of Revenue with respect to all returns due and taxes per Section 00 22 13
        - Certification from the Secretary of State for foreign corporations per Section 00 22 13
4. Other conditions precedent:

    LIST OTHERS IF ANY

Failure to comply with the above conditions within the time specified will entitle the Owner to consider you in default, annul this Notice of Award, and declare your Bid security forfeited.

After confirming that you have complied with the above conditions, Owner will deliver the conformed Contract Documents for execution.

_____

Owner

By:_____

Authorized Signature

_____

Title

Copy to Engineer

based on EJCDC C-510 Notice of Award
Prepared by the Engineers Joint Contract Documents Committee and endorsed by the Construction Specifications Institute.

SAMPLE LETTER FROM CONTRACTOR REGARDING ACCOUNTING CONTROLS
Pursuant to MGL Chapter 30, Section 39R

TO BE SUBMITTED ON CONTRACTOR'S LETTERHEAD

DATE

INSERT Owner name and address

RE: [INSERT CONTRACT #/PROJECT # AND NAME]

Dear [_____]:

This letter is being submitted pursuant to MGL Chapter 30 §39R(c). Please be advised that our firm has a system of internal accounting controls which assure that:

(1) transactions are executed in accordance with management's general and specific authorization;

(2) transactions are recorded as necessary, to permit preparation of financial statements in conformity with generally accepted accounting principles, and to maintain accountability for assets;

(3) access to assets is permitted only in accordance with management's general or specific authorization; and

(4) the recorded accountability for assets is compared with the existing assets at reasonable intervals and appropriate action was taken with respect to any difference.

Sincerely,

_____

[Name and title of authorized representative of Contractor]

based on EJCDC C-510 Notice of Award
Prepared by the Engineers Joint Contract Documents Committee and endorsed by the Construction Specifications Institute.

SAMPLE LETTER FROM CPA REGARDING CONTRACTOR ACCOUNTING CONTROLS
Pursuant to MGL Chapter 30, Section 39R

TO BE SUBMITTED ON CPA'S LETTERHEAD

DATE

INSERT Owner name and address

RE: [INSERT CONTRACT #/PROJECT # AND NAME]

Dear [_____]:

Please be advised that we have reviewed the Statement of Internal Accounting Controls prepared by [NAME OF CONTRACTOR], in connection with the above-captioned Project as required under MGL Chapter 30, § 39R. In our opinion, representations of management are consistent with our evaluations of the system of internal accounting controls and such representations are, in addition, reasonable with respect to transactions and assets in amounts which would be material when measured in relation to [NAME OF CONTRACTOR]'s financial statements.

Sincerely,

_____, CPA
[Name]

based on EJCDC C-510 Notice of Award
Prepared by the Engineers Joint Contract Documents Committee and endorsed by the Construction Specifications Institute.

SECTION 00 52 10

AGREEMENT FORM

THIS AGREEMENT made and entered into this _____ day of [YEAR], by and between [INSERT CONTRACTOR NAME], a [INSERT CO TYPE], duly organized by law and having a usual place of business at [INSERT ADDRESS], hereinafter called "CONTRACTOR", and the CITY OF LOWELL, a municipal corporation duly established by law and located in the County of Middlesex and said Commonwealth, acting by and through its Executive Director of Lowell Regional Water Utility, hereinafter called "CITY" (and defined as "Owner"), WITNESSETH: That

WHEREAS, the CITY issued its Notice to Contractors for certain Water System Improvements for the Lowell Regional Water Utility in the City of Lowell; and

WHEREAS, the CONTRACTOR did bid and offer to do all the Work and furnish all the labor, materials, equipment, tools, appliances, etc. necessary for **Project No. 227251.30 Residuals Handling Facilities Upgrades** in the City of Lowell; and

WHEREAS, the CITY has accepted the CONTRACTOR'S Bid, subject to the conditions and agreements herein contained;

NOW, THEREFORE, in consideration of the mutual agreements of the parties hereinafter set forth, and the price to be paid by the CITY to the CONTRACTOR for the Work to be done under this Agreement, the parties agree as follows:

-1-

The CONTRACTOR agrees that it will do all the Work and furnish all the labor, materials, equipment, tools, appliances, etc. necessary, for the Residuals Handling Facilities Upgrades in the City of Lowell, during the period commencing upon issuance of a "Notice to Proceed" issued by the Executive Director of Lowell Regional Water Utility in strict accordance with the Contract Documents.

The CONTRACTOR agrees the Work shall be substantially complete within 175 calendar days from the commencement of Contract Time and completed and ready for final payment within 210 calendar days from the commencement of Contract Time in accordance with Paragraph 14.07 of the General Conditions and Supplementary Conditions, if any.

The CONTRACTOR and CITY recognize time is of the essence and CITY will suffer financial loss if the Work is not completed within the times specified above, plus any extensions thereof allowed in accordance with Article 12 of the General Conditions and Supplementary Conditions, if any. The parties also recognize the delays, expense, and difficulties involved in proving in a legal or arbitration proceeding the actual loss suffered by CITY if the Work is not completed on time. Accordingly, instead of requiring any such proof, CITY and CONTRACTOR agree that as liquidated damages for delay (but not as a penalty), CONTRACTOR shall pay CITY the sum of **$1,000.00** per day for each and every calendar day that expires after the time specified above for Substantial Completion until Work is substantially complete. After Substantial Completion, if CONTRACTOR shall neglect, refuse, or fail to complete the remaining Work within the Contract Time or any proper extension thereof granted by CITY, CONTRACTOR shall pay CITY **$1,000.00** per day for each and every calendar day that expires after the time specified in above for completion and readiness for final payment until the Work is completed and ready for final payment.

The Contract Documents consist of the following, which are attached to this Agreement and made a part hereof: items listed in Section 00 54 00, forms listed in Section 00 60 00, General Conditions and in Section 00 72 05, Supplementary Conditions listed in Section 00 73 05, Specifications and Drawings as listed in the table of contents, and Notice to Proceed, Work Change Directives, and Change Orders which may be issued on or after the Effective Date of the Agreement and are not attached. The Contract Documents may only be amended, modified, or supplemented as provided in Paragraph 3.04 of the General Conditions and Supplementary Conditions, if any.

-3-

Total payments under this Agreement shall not exceed [IN WORDS] Dollars and [# OF CENTS] CENTS ($_____). This Agreement shall be subject to annual appropriation.

-4-

The Work to be done under this Agreement, including the furnishing of materials, equipment, tools, appliances, etc. necessary in connection therewith must, in all respects, notwithstanding any provision herein to the contrary or inconsistent therewith, meet with the requirements of the Contract Documents and the approval of the said Executive Director of Lowell Regional Water Utility.

-5-

The CITY, in consideration of the above Agreements on the part of the CONTRACTOR to be performed, agrees to pay to the CONTRACTOR the price set forth in Paragraph No. 3 above for all Work performed and materials, equipment, tools, appliances, etc. furnished in accordance with the Contract Documents. Payment shall be made on the twentieth day of the month for all Work performed and materials, equipment, tools, appliances, etc. furnished as Applications for Payment are filed in the Office of the Executive Director of Lowell Regional Water Utility on or before the first day of the month in which payment is to be made. Any payment under this Agreement shall not constitute or be deemed a waiver, relinquishment, release or abandonment of any claim which the CITY may have against the CONTRACTOR for breach of this Agreement.

-6-

The said CONTRACTOR agrees that before commencing any Work to be done under this Agreement, it shall provide, at its own cost and expense, insurance as specified in the General Conditions and Supplementary Conditions, and for the payment of compensation and the furnishing of other benefits under the provisions of the Massachusetts General Laws Chapter 152, and amendments thereto, to cover all employees to be employed by the CONTRACTOR in connection with the Work to be done under this Agreement; and the said CONTRACTOR agrees that it shall continue in force and effect said policy of insurance during the period covered by this Agreement. Failure to provide and continue in force, said insurance shall be deemed a material breach of this Agreement and shall operate, without notice of any kind to the said CONTRACTOR, as an immediate termination of this Agreement. In the event that the CITY should be obliged or required to pay compensation or furnish benefits to any of the said CONTRACTOR'S employees, in accordance with the provisions of General Laws, Chapter 152, and amendments thereto, the said CONTRACTOR agrees that it will reimburse and indemnify the said CITY from any payments it may be obliged or required to make under the provisions of General Laws, Chapter 152, and amendments thereto.

-7-

The CONTRACTOR agrees to comply with all the provisions of General Laws, Chapter 149, Sections 26, 27 and 27A through 27H, inclusive, and all related sections, including amendments thereto, in performing all Work under this Agreement, and the provisions of said sections are made a part of this Agreement and are to be considered as covenants, terms and conditions hereof as though all the provisions were specifically incorporated herein. The said CONTRACTOR agrees to pay the minimum wage rates as determined by the Commissioner of the Department of Labor Standards included in in Section 00 73 46, and comply with the requirements set forth in Section 00 73 43. CONTRACTOR further agrees that, in the event that there are to be employees of additional classifications other than those specifically stated therein to be engaged in the Work to be performed under this Agreement, to submit a list of the additional classifications of those to be employed to the said Executive Director of Lowell Regional Water Utility, and the said CONTRACTOR agrees that it will pay the additional minimum wage rates as determined by the said Commissioner of the Department of Labor Standards under the provisions of General Laws, Chapter 149, Section 27, and the amendments thereto.

-8-

No laborer, Workman or mechanic, Working within the Commonwealth, in the employ of the CONTRACTOR, or any Subcontractor authorized under this Agreement shall, in connection with the Work to be done under this Agreement, be required or requested to Work more than 8 hours in any 1 calendar day, or more than 48 hours in any 1 week, except in cases of extraordinary emergency, unless otherwise provided by Laws and Regulations.

-9-

It is further agreed by the CONTRACTOR that, in the event the CITY is sued in a court of law or equity, or demand is made upon the CITY for payment of any damages arising out of the CONTRACTOR'S performance or non-performance of this Contract, then the CONTRACTOR, without reservation, shall indemnify and hold harmless the CITY against any and all claims arising out of the CONTRACTOR'S performance or non-performance of the Agreement.

-10-

This Contract shall not be in force until the CONTRACTOR has executed and delivered to the CITY and until the CITY has accepted a Performance Bond in the amount of one hundred per cent (100%) of the Contract price and a Payment Bond in the amount one hundred percent (100%) of the Contract price. The Performance Bond and Payment Bond shall be secured by and paid for by the CONTRACTOR and shall be issued by a Surety Company in accordance with the General Conditions and Supplementary Conditions, if any, satisfactory to the Executive Director of Lowell Regional Water Utility, and in compliance with the Contract Documents.

-11-

This Contract is subject to all Laws and Regulations of the Commonwealth of Massachusetts, federal, state and local, which are applicable to this Contract, and it is presumed that the CONTRACTOR is cognizant thereof.

-12-

The CONTRACTOR shall give its personal attention constantly to the faithful performance of the Work and shall keep the same under its personal control and shall not assign nor sublet the Work or any part thereof without the previous written consent of the CITY and shall not, either legally or equitably, assign any of the monies payable under this Agreement or its claim thereto unless by and with the written consent of the CITY.

-13-

The CONTRACTOR agrees that its attention has been called to the provisions of the "Reserve System" Ordinance of the City of Lowell, which is now incorporated in the "The Code of Ordinances City of Lowell, Massachusetts", passed by the City Council on April 26, 1988 and amendments thereto and that each purchase order, so-called, issued in accordance with Section 7-76 of said Code to cover the services to be rendered under this Agreement shall be made a part hereof by reference. It is further agreed that no obligation shall be considered to have incurred under this Agreement unless and until a purchase order shall have been duly issued and approved.

And further, that the obligation incurred shall be limited to the amount set forth in purchase order or purchase orders duly issued and approved.

-14-

It is further agreed that the CITY may terminate this Agreement at any time, with or without cause, upon thirty (30) days' written notice to the CONTRACTOR, sent by certified mail, to the usual place of business of the CONTRACTOR.

-15-

The CONTRACTOR certifies under penalties of perjury that its Bid was made and submitted in good faith and without collusion or fraud with any other person. As used in this certification, the word "person" shall mean any natural person, business, partnership, corporation, union, committee, club or other organization, entity, or group of individuals.

-16-

The CONTRACTOR certifies that any and all taxes and municipal fees due and owing to the City of Lowell have been paid in full.

-17-

It is understood and agreed by the CITY and the CONTRACTOR that pursuant to the Code of the City of Lowell, Chapter 28, Article V, a Contract Performance Record Form must be completed on this Contract by the Department Head or his/her designee, who is supervising this Contract, and such Contract Performance Record Form must be submitted to the City Manager, City Auditor, and Purchasing Agent prior to release of final payment under this Contract. If requested by the CONTRACTOR a copy of the Contract Performance Record Form shall be furnished to the CONTRACTOR.

-18-

The CONTRACTOR agrees that it will be responsible for any damage, as determined by the Commissioner of Public Works, caused by the CONTRACTOR, its Subcontractors, agents, servants, employees or any independent contractor hired by the CONTRACTOR to perform any of the Work under this Contract, to the streets, ways, sidewalks, and vegetation or any other property of the CITY as a result of, or in conjunction with, the Work performed under this Contract, whether caused by actual Work or by the use of any equipment in connection with said Work. The CONTRACTOR agrees that, upon notice of such damage by the CITY, the CONTRACTOR shall repair (or replaced if required) to the satisfaction of the CITY, said streets, ways, sidewalks, and vegetation or any other property of the CITY, to which such damage has been caused prior to the completion of this Contract.

-19-

The CONTRACTOR shall not discriminate against or exclude any person from participation herein on grounds of race, religion, color, sex, age, or national origin; and that it shall take affirmative actions to insure that applicants are employed, and that employees are treated during their employment, without regard to race, religion, color, sex, age, handicapped status, or national origin.

-20-

The CONTRACTOR shall not participate in or cooperate with an international boycott, as defined in Section 999 (b)(3) and (4) of the Internal Revenue code 1986, as amended, or engage in conduct declared to be unlawful by Section 2 of Chapter 151 E of the Massachusetts General Laws. .

All fees for permits or licenses required for this Project by the CITY, or any other agency, shall be an expense of the CONTRACTOR and shall not be waived, except those identified in Section 00 73 10 as obtained by Owner.

IN WITNESS WHEREOF, the said _____, and the said CITY OF LOWELL have hereto and to a duplicate and triplicate hereof caused their corporate seals to be affixed, and these presents, together with said duplicate and triplicate, to be signed in their name and behalf by their duly authorized officers the day and year first above written.

APPROVED

_____
Bernard F. Lynch
City Manager

APPROVED AS TO FORM:

_____
Christine P.O'Connor
City Solicitor

Date: _____

CONTRACTOR

By _____

Federal I.D. or Social Security No.

_____

CITY OF LOWELL

_____
P. Michael Vaughn
Chief Procurement Officer

_____
Erik Gitschier
Executive Director
Lowell Regional Water Utility

APPROVED AS TO APPROPRIATION
Pursuant to M.G.L. c.44, s31C, I certify that an appropriation has been made in the total amount of the Contract

_____
Hannah York
City Auditor

END OF SECTION

This page intentionally left blank

SECTION 00 54 00

AGREEMENT FORM SUPPLEMENTS

The following items supplement the Agreement and are incorporated into the Agreement and made a part thereof. Terms used herein will have the meanings stated in the General Conditions and Supplementary Conditions, if any.

The address system used herein references the paragraph numbers in the Agreement, with the prefix "A" added thereto. Additional terms used in this Section have the meanings stated below, which are applicable to both the singular and plural thereof.

A-3 Total Payments (Contract Price): Add the following.

The total payments stated in the Agreement shall be on the basis of the total price stated in the Bid Form including unit priced items.

A. Unit Prices have been computed in accordance with Paragraph 11.03.A of the General Conditions and Supplementary Conditions, if any.

B. The prices for Unit Price Work set forth as of the Effective Date of the Agreement are based on estimated quantities. As provided in Paragraph 11.03 of the General Conditions and Supplementary Conditions, if any, estimated quantities are not guaranteed, and determinations of actual quantities and classifications are to be made by Engineer as provided in Paragraph 9.07 of the General Conditions and Supplementary Conditions, if any. Final payment for unit price items will be based on actual quantities determined and based on the unit prices stated in the Bid Form.

A-5 Payment: Add the following.

A. Submittal and Processing of Payments

1. Contractor shall submit Applications for Payment in accordance with Article 14 of the General Conditions and Supplementary Conditions, if any. Applications for Payment will be processed by Engineer as provided in the General Conditions and Supplementary Conditions, if any, and the General Requirements.

B. Progress Payments; Retainage

1. Owner shall make progress payments on account of the Contract Price on the basis of Contractor's Applications for Payment as provided below. All such payments will be measured by the schedule of values established as provided in Paragraph 2.07.A of the General Conditions and Supplementary Conditions, if any, (and in the case of Unit Price Work based on the number of units completed).

2. Prior to Substantial Completion, progress payments will be made in an amount equal to the percentage indicated below but, in each case, less the aggregate of payments previously made and less such amounts as Engineer may determine or Owner may withhold, including but not limited to liquidated damages, in accordance with Paragraph 14.02 of the General Conditions and Supplementary Conditions, if any, and additional retainage allowed by Laws and Regulations.

   a. Progress Payments of 95 percent for Work completed (with the balance of 5 percent being retainage); and

   b. 95 percent of cost of materials and equipment not incorporated in the Work (with the balance of 5 percent being retainage).

3. Upon Substantial Completion, Owner shall pay an amount sufficient to increase total payments to Contractor to 99 percent of the Work completed (with the balance of 1 percent being retainage), less such amounts as Engineer shall determine in accordance with Paragraph 14.02.B.5 of the General and Supplementary Conditions, if any, and less the Engineer's estimate of the value of Work to be completed or corrected as shown on the tentative list of items to be completed or corrected (Punch List) attached to the certificate of Substantial Completion and subject to Paragraph 14.04 of the General and Supplementary Conditions, if any.

   However, retainage for items planted in the ground shall remain at 5 percent of the cost of such items until Final Payment per Massachusetts General Laws Chapter 30, Section 39G.

C. Final Payment: Upon final completion and acceptance of the Work in accordance with Paragraph 14.07 of the General and Supplementary Conditions, if any, Owner shall pay the remainder of the Contract Price as recommended by Engineer as provided in said Paragraph 14.07.

D. Interest: All moneys not paid when due as provided in Article 14 of the General and Supplementary Conditions, if any, shall bear interest at the rate three percentage points above the rediscount rate then charged by the Federal Reserve Bank of Boston per Massachusetts General Laws Chapter 30, Section 39K. Interest shall not be accrued on retainage.

A-8 Work Hours/Labor: Add the following.

See Section 00 73 73 for additional statutory requirements.

A-9 Indemnity: Add the following.

This indemnification shall also extend to the Engineer and its officers, agents, consultants, and employees.

A-11 Laws: Add the following.

Reference to "General Laws" shall mean the "Massachusetts General Laws" and may be referenced as "M.G.L" or "MGL" in the Contract Documents. See Section to 00 73 73 for statutory requirements.

A-13 Reserve System Ordinance: Add the following.

Notwithstanding the above, the terms and conditions of such purchase orders shall not supersede any terms and conditions of the Contract Documents and in case of conflict, the terms and conditions of the Contract Documents shall take precedence.

A-14 Termination: Add the following.

See also Article 15 of the General Conditions and Supplementary Conditions, if any, for additional provisions.

A-16 Taxes: Add the following.

Contractor's and Subcontractors' Certificates of Good Standing from MA Department of Revenue is included at the end of this Section.

A-18 Damages: Add the following.

See Paragraphs 6.11 and 6.13 of the General Conditions and Supplementary Conditions,, if any, and the General Requirements for additional requirements.

A-20 Non Discrimination: Add the following.

See Section 00 73 36 for additional requirements.

A-21 Statutory Requirements

See Section 00 73 73 for additional statutory requirements.

Add the following new requirements

-26-

The Project has been designed by Woodard and Curran, Inc. (Engineer), which is to act as Owner's representative, assume all duties and responsibilities, and have the rights and authority assigned to Engineer in the Contract Documents in connection with the completion of the Work in accordance with the Contract Documents.

-27-

In order to induce Owner to enter into this Agreement, Contractor makes the following representations:

A. Contractor has examined and carefully studied the Contract Documents and the other related data identified in the Bidding Documents.

B. Contractor has visited the Site and become familiar with and is satisfied as to the general, local, and Site conditions that may affect cost, progress, and performance of the Work.

C. Contractor is familiar with and is satisfied as to all federal, state, and local Laws and Regulations that may affect cost, progress, and performance of the Work.

D. Contractor has carefully studied all: (1) reports of explorations and tests of subsurface conditions at or contiguous to the Site and all drawings of physical conditions relating to existing surface or subsurface structures at the Site (except Underground Facilities), if any, that have been identified in Paragraph SC-4.02 in Section 00 73 10 of the Supplementary Conditions as containing reliable "technical data," and (2) reports and drawings of Hazardous Environmental Conditions, if any, at the Site that have been identified in Paragraph SC-4.06 in Section 00 73 10 of the Supplementary Conditions as containing reliable "technical data."

E. Contractor has considered the information known to Contractor; information commonly known to contractors doing business in the locality of the Site; information and observations obtained from visits to the Site; the Contract Documents; and the Site-related reports and drawings identified in the Contract Documents, with respect to the effect of such information, observations, and documents on (1) the cost, progress, and performance of the Work; (2) the means, methods, techniques, sequences, and procedures of construction to be employed by Contractor, including any specific means, methods, techniques, sequences, and procedures of construction expressly required by the Contract Documents; and (3) Contractor's safety precautions and programs.

F. Based on the information and observations referred to in Paragraph E above, Contractor does not consider that further examinations, investigations, explorations, tests, studies, or data are necessary for the performance of the Work at the Contract Price, within the Contract Times, and in accordance with the other terms and conditions of the Contract Documents.

G. Contractor is aware of the general nature of work to be performed by Owner and others at the Site that relates to the Work as indicated in the Contract Documents.

H. Contractor has given Engineer written notice of all conflicts, errors, ambiguities, or discrepancies that Contractor has discovered in the Contract Documents, and the written resolution thereof by Engineer is acceptable to Contractor.

I. The Contract Documents are generally sufficient to indicate and convey understanding of all terms and conditions for performance and furnishing of the Work.

J. Further, the Contractor certifies, under the penalties of perjury, that:

1. Contractor has not engaged in corrupt, fraudulent, collusive, or coercive practices in competing for or in executing the Contract. For the purposes of this Paragraph:

    a. "corrupt practice" means the offering, giving, receiving, or soliciting of anything of value likely to influence the action of a public official in the bidding process or in the Contract execution;

    b. "fraudulent practice" means an intentional misrepresentation of facts made (a) to influence the bidding process or the execution of the Contract to the detriment of Owner, (b) to establish Bid or Contract prices at artificial non-competitive levels, or (c) to deprive Owner of the benefits of free and open competition;

    c. "collusive practice" means a scheme or arrangement between two or more Bidders, with or without the knowledge of Owner, a purpose of which is to establish Bid prices at artificial, non-competitive levels; and

    d. "coercive practice" means harming or threatening to harm, directly or indirectly, persons or their property to influence their participation in the bidding process or affect the execution of the Contract.

2. Contractor has complied with all laws of the Commonwealth of Massachusetts relating to taxes, reporting of employees and contractors, and withholding and remitting of child support and, has provided for itself and each Subcontractor, a Certificate of Good Standing from the Department of Revenue with respect to all returns due and taxes and

further, and certifies that, to the best of its knowledge and belief, certifies all state tax returns have been filed and all state taxes have been paid as required by Law pursuant to Massachusetts General Laws Chapter 62C, Section 49A;

3. If a foreign corporation, Contractor has provided for itself and each Subcontractor, a certificate of the state secretary stating that the corporation has complied with requirements of Massachusetts General Laws Chapter 156D, Part 15, Section 15.03 of subdivision A and the date of compliance, and further has filed all annual reports required by Section 16.22 of subdivision B of Part 16 of said Chapter 156D, pursuant to Massachusetts General Laws Chapter 30, Section 39L;

4. Contractor is able to furnish labor that can work in harmony with all other elements of labor employed or to be employed in the Work and further certifies that all employees to be employed at the Work Site will have successfully completed a course in construction safety and health approved by the United States Occupational Safety and Health Administration that is at least 10 hours in duration at the time the employee begins Work and shall furnish documentation of successful completion of said course with the first certified payroll report for each employee;

5. Contractor is not presently debarred from entering into a public contract Commonwealth of Massachusetts under the provisions of Massachusetts General Laws Chapter 29, Section 29F, or any other applicable debarment provisions of any other chapter of the General Laws or any rule or regulations promulgated thereunder; and is not presently debarred, suspended, proposed for debarment, declared ineligible, or voluntarily excluded from covered transactions by any Federal department or agency;

6. Pursuant to Massachusetts General Laws Chapter 30, Section 39R, Contractor has provided a statement by management on internal accounting controls, a statement prepared by an independent certified public accountant; and an audited financial statement for the most recent completed fiscal year; and

7. Contractor will incorporate the applicable provisions of the Contract Documents into all subcontracts and Purchase Orders so that such provisions will be binding upon each Subcontractor or Supplier.

Owner and Contractor each binds itself, its partners, successors, assigns, and legal representatives to the other party hereto, its partners, successors, assigns, and legal representatives in respect to all covenants, agreements, and obligations contained in the Contract Documents.

-29-

Any provision or part of the Contract Documents held to be void or unenforceable under any Law or Regulation shall be deemed stricken, and all remaining provisions shall continue to be valid and binding upon Owner and Contractor, who agree that the Contract Documents shall be reformed to replace such stricken provision or part thereof with a valid and enforceable provision that comes as close as possible to expressing the intention of the stricken provision.

-30-

The following attachments to this Section are incorporated into the Agreement and made a part thereof.

- DCAMM General Contractor Update Statement (00 45 55)
- DCAMM Sub-Bidder Update Statement (00 45 56)
- 00 61 13.13 Performance Bond
- 00 61 13.16 Payment Bond
- Insurance certificates

- **Certifications**
  - Certificate from the Secretary of State for foreign corporations
  - Certificate of Good Standing from MA Department of Revenue with respect to all returns due and taxes
  - A statement by management on internal accounting controls
  - A statement prepared by an independent certified public accountant regarding management's statement
  - An audited financial statement for the most recent completed fiscal year
  - Subcontractor certification from the Secretary of State for foreign corporations
  - Subcontractor Certificates of Good Standing from MA Department of Revenue with respect to all returns due and taxes

END OF SECTION

This page intentionally left blank.

EJCDC
ENGINEERS JOINT CONTRACT DOCUMENTS COMMITTEE

PERFORMANCE BOND (Form C-006113.13)

CONTRACTOR *(name and address)*:

SURETY *(name and address of principal place of business)*:

OWNER *(name and address)*:

CONSTRUCTION CONTRACT

Effective Date of the Agreement:

Amount:

Description *(name and location)*:

BOND

Bond Number:

Date *(not earlier than the Effective Date of the Agreement of the Construction Contract)*:

Amount:

Modifications to this Bond Form: ☐ None ☐ See Paragraph 16

Surety and Contractor, intending to be legally bound hereby, subject to the terms set forth below, do each cause this Performance Bond to be duly executed by an authorized officer, agent, or representative.

CONTRACTOR AS PRINCIPAL

_____ *(seal)*
Contractor's Name and Corporate Seal

By: _____
Signature

_____
Print Name

_____
Title

Attest: _____
Signature

_____
Title

SURETY

_____ *(seal)*
Surety's Name and Corporate Seal

By: _____
Signature *(attach power of attorney)*

_____
Print Name

_____
Title

Attest: _____
Signature

_____
Title

Notes: (1) Provide supplemental execution by any additional parties, such as joint venturers. (2) Any singular reference to Contractor, Surety, Owner, or other party shall be considered plural where applicable.

1. The Contractor and Surety, jointly and severally, bind themselves, their heirs, executors, administrators, successors, and assigns to the Owner for the performance of the Construction Contract, which is incorporated herein by reference.

2. If the Contractor performs the Construction Contract, the Surety and the Contractor shall have no obligation under this Bond, except when applicable to participate in a conference as provided in Paragraph 3.

3. If there is no Owner Default under the Construction Contract, the Surety's obligation under this Bond shall arise after:

3.1 The Owner first provides notice to the Contractor and the Surety that the Owner is considering declaring a Contractor Default. Such notice shall indicate whether the Owner is requesting a conference among the Owner, Contractor, and Surety to discuss the Contractor's performance. If the Owner does not request a conference, the Surety may, within five (5) business days after receipt of the Owner's notice, request such a conference. If the Surety timely requests a conference, the Owner shall attend. Unless the Owner agrees otherwise, any conference requested under this Paragraph 3.1 shall be held within ten (10) business days of the Surety's receipt of the Owner's notice. If the Owner, the Contractor, and the Surety agree, the Contractor shall be allowed a reasonable time to perform the Construction Contract, but such an agreement shall not waive the Owner's right, if any, subsequently to declare a Contractor Default;

3.2 The Owner declares a Contractor Default, terminates the Construction Contract and notifies the Surety; and

3.3 The Owner has agreed to pay the Balance of the Contract Price in accordance with the terms of the Construction Contract to the Surety or to a contractor selected to perform the Construction Contract.

4. Failure on the part of the Owner to comply with the notice requirement in Paragraph 3.1 shall not constitute a failure to comply with a condition precedent to the Surety's obligations, or release the Surety from its obligations, except to the extent the Surety demonstrates actual prejudice.

5. When the Owner has satisfied the conditions of Paragraph 3, the Surety shall promptly and at the Surety's expense take one of the following actions:

5.1 Arrange for the Contractor, with the consent of the Owner, to perform and complete the Construction Contract;

5.2 Undertake to perform and complete the Construction Contract itself, through its agents or independent contractors;

5.3 Obtain bids or negotiated proposals from qualified contractors acceptable to the Owner for a contract for performance and completion of the Construction Contract, arrange for a contract to be prepared for execution by the Owner and a contractor selected with the Owners concurrence, to be secured with performance and payment bonds executed by a qualified surety equivalent to the bonds issued on the Construction Contract, and pay to the Owner the amount of damages as described in Paragraph 7 in excess of the Balance of the Contract Price incurred by the Owner as a result of the Contractor Default; or

5.4 Waive its right to perform and complete, arrange for completion, or obtain a new contractor, and with reasonable promptness under the circumstances:

5.4.1 After investigation, determine the amount for which it may be liable to the Owner and, as soon as practicable after the amount is determined, make payment to the Owner; or

5.4.2 Deny liability in whole or in part and notify the Owner, citing the reasons for denial.

6. If the Surety does not proceed as provided in Paragraph 5 with reasonable promptness, the Surety shall be deemed to be in default on this Bond seven days after receipt of an additional written notice from the Owner to the Surety demanding that the Surety perform its obligations under this Bond, and the Owner shall be entitled to enforce any remedy available to the Owner. If the Surety proceeds as provided in Paragraph 5.4, and the Owner refuses the payment or the Surety has denied liability, in whole or in part, without further notice the Owner shall be entitled to enforce any remedy available to the Owner.

7. If the Surety elects to act under Paragraph 5.1, 5.2, or 5.3, then the responsibilities of the Surety to the Owner shall not be greater than those of the Contractor under the Construction Contract, and the responsibilities of the Owner to the Surety shall not be greater than those of the Owner under the Construction Contract. Subject to the commitment by the Owner to pay the Balance of the Contract Price, the Surety is obligated, without duplication for:

7.1 the responsibilities of the Contractor for correction of defective work and completion of the Construction Contract;

7.2 additional legal, design professional, and delay costs resulting from the Contractor's Default, and resulting from the actions or failure to act of the Surety under Paragraph 5; and

7.3 liquidated damages, or if no liquidated damages are specified in the Construction Contract, actual damages caused by delayed performance or non-performance of the Contractor.

8. If the Surety elects to act under Paragraph 5.1, 5.3, or 5.4, the Surety's liability is limited to the amount of this Bond.

9. The Surety shall not be liable to the Owner or others for obligations of the Contractor that are unrelated to the Construction Contract, and the Balance of the Contract Price shall not be reduced or set off on account of any such unrelated obligations. No right of action shall accrue on this Bond to any person or entity other than the Owner or its heirs, executors, administrators, successors, and assigns.

10. The Surety hereby waives notice of any change, including changes of time, to the Construction Contract or to related subcontracts, purchase orders, and other obligations.

11. Any proceeding, legal or equitable, under this Bond may be instituted in any court of competent jurisdiction in the location in which the work or part of the work is located and shall be instituted within two years after a declaration of Contractor Default or within

two years after the Contractor ceased working or within two years after the Surety refuses or fails to perform its obligations under this Bond, whichever occurs first. If the provisions of this paragraph are void or prohibited by law, the minimum periods of limitations available to sureties as a defense in the jurisdiction of the suit shall be applicable.

12. Notice to the Surety, the Owner, or the Contractor shall be mailed or delivered to the address shown on the page on which their signature appears.

13. When this Bond has been furnished to comply with a statutory or other legal requirement in the location where the construction was to be performed, any provision in this Bond conflicting with said statutory or legal requirement shall be deemed deleted herefrom and provisions conforming to such statutory or other legal requirement shall be deemed incorporated herein. When so furnished, the intent is that this Bond shall be construed as a statutory bond and not as a common law bond.

14. Definitions

14.1 Balance of the Contract Price: The total amount payable by the Owner to the Contractor under the Construction Contract after all proper adjustments have been made including allowance for the Contractor for any amounts received or to be received by the Owner in settlement of insurance or other claims for damages to which the Contractor is entitled, reduced by all valid and proper payments made to or on behalf of the Contractor under the Construction Contract.

14.2 Construction Contract: The agreement between the Owner and Contractor identified on the cover page, including all Contract Documents and changes made to the agreement and the Contract Documents.

14.3 Contractor Default: Failure of the Contractor, which has not been remedied or waived, to perform or otherwise to comply with a material term of the Construction Contract.

14.4 Owner Default: Failure of the Owner, which has not been remedied or waived, to pay the Contractor as required under the Construction Contract or to perform and complete or comply with the other material terms of the Construction Contract.

14.5 Contract Documents: All the documents that comprise the agreement between the Owner and Contractor.

15. If this Bond is issued for an agreement between a contractor and subcontractor, the term Contractor in this Bond shall be deemed to be Subcontractor and the term Owner shall be deemed to be Contractor.

16. Modifications to this Bond are as follows:

This page intentionally left blank

EJCDC
ENGINEERS JOINT CONTRACT DOCUMENTS COMMITTEE

PAYMENT BOND (Form C-006113.16)

CONTRACTOR *(name and address)*:

SURETY *(name and address of principal place of business)*:

OWNER *(name and address)*:

CONSTRUCTION CONTRACT
Effective Date of the Agreement:
Amount:
Description *(name and location)*:

BOND
Bond Number:
Date *(not earlier than the Effective Date of the Agreement of the Construction Contract)*:
Amount:
Modifications to this Bond Form: ☐ None ☐ See Paragraph 18

Surety and Contractor, intending to be legally bound hereby, subject to the terms set forth below, do each cause this Payment Bond to be duly executed by an authorized officer, agent, or representative.

CONTRACTOR AS PRINCIPAL

_____ *(seal)*
Contractor's Name and Corporate Seal

By: _____
Signature

_____
Print Name

_____
Title

Attest: _____
Signature

_____
Title

SURETY

_____ *(seal)*
Surety's Name and Corporate Seal

By: _____
Signature *(attach power of attorney)*

_____
Print Name

_____
Title

Attest: _____
Signature

_____
Title

Notes: (1) Provide supplemental execution by any additional parties, such as joint venturers. (2) Any singular reference to Contractor, Surety, Owner, or other party shall be considered plural where applicable.

1. The Contractor and Surety, jointly and severally, bind themselves, their heirs, executors, administrators, successors, and assigns to the Owner to pay for labor, materials, and equipment furnished for use in the performance of the Construction Contract, which is incorporated herein by reference, subject to the following terms.

2. If the Contractor promptly makes payment of all sums due to Claimants, and defends, indemnifies, and holds harmless the Owner from claims, demands, liens, or suits by any person or entity seeking payment for labor, materials, or equipment furnished for use in the performance of the Construction Contract, then the Surety and the Contractor shall have no obligation under this Bond.

3. If there is no Owner Default under the Construction Contract, the Surety's obligation to the Owner under this Bond shall arise after the Owner has promptly notified the Contractor and the Surety (at the address described in Paragraph 13) of claims, demands, liens, or suits against the Owner or the Owner's property by any person or entity seeking payment for labor, materials, or equipment furnished for use in the performance of the Construction Contract, and tendered defense of such claims, demands, liens, or suits to the Contractor and the Surety.

4. When the Owner has satisfied the conditions in Paragraph 3, the Surety shall promptly and at the Surety's expense defend, indemnify, and hold harmless the Owner against a duly tendered claim, demand, lien, or suit.

5. The Surety's obligations to a Claimant under this Bond shall arise after the following:

   5.1 Claimants who do not have a direct contract with the Contractor,

      5.1.1 have furnished a written notice of non-payment to the Contractor, stating with substantial accuracy the amount claimed and the name of the party to whom the materials were, or equipment was, furnished or supplied or for whom the labor was done or performed, within ninety (90) days after having last performed labor or last furnished materials or equipment included in the Claim; and

      5.1.2 have sent a Claim to the Surety (at the address described in Paragraph 13).

   5.2 Claimants who are employed by or have a direct contract with the Contractor have sent a Claim to the Surety (at the address described in Paragraph 13).

6. If a notice of non-payment required by Paragraph 5.1.1 is given by the Owner to the Contractor, that is sufficient to satisfy a Claimant's obligation to furnish a written notice of non-payment under Paragraph 5.1.1.

7. When a Claimant has satisfied the conditions of Paragraph 5.1 or 5.2, whichever is applicable, the Surety shall promptly and at the Surety's expense take the following actions:

   7.1 Send an answer to the Claimant, with a copy to the Owner, within sixty (60) days after receipt of the Claim, stating the amounts that are undisputed and the basis for challenging any amounts that are disputed; and

   7.2 Pay or arrange for payment of any undisputed amounts.

   7.3 The Surety's failure to discharge its obligations under Paragraph 7.1 or 7.2 shall not be deemed to constitute a waiver of defenses the Surety or Contractor may have or acquire as to a Claim, except as to undisputed amounts for which the Surety and Claimant have reached agreement. If, however, the Surety fails to discharge its obligations under Paragraph 7.1 or 7.2, the Surety shall indemnify the Claimant for the reasonable attorney's fees the Claimant incurs thereafter to recover any sums found to be due and owing to the Claimant.

8. The Surety's total obligation shall not exceed the amount of this Bond, plus the amount of reasonable attorney's fees provided under Paragraph 7.3, and the amount of this Bond shall be credited for any payments made in good faith by the Surety.

9. Amounts owed by the Owner to the Contractor under the Construction Contract shall be used for the performance of the Construction Contract and to satisfy claims, if any, under any construction performance bond. By the Contractor furnishing and the Owner accepting this Bond, they agree that all funds earned by the Contractor in the performance of the Construction Contract are dedicated to satisfy obligations of the Contractor and Surety under this Bond, subject to the Owner's priority to use the funds for the completion of the work.

10. The Surety shall not be liable to the Owner, Claimants, or others for obligations of the Contractor that are unrelated to the Construction Contract. The Owner shall not be liable for the payment of any costs or expenses of any Claimant under this Bond, and shall have under this Bond no obligation to make payments to or give notice on behalf of Claimants, or otherwise have any obligations to Claimants under this Bond.

11. The Surety hereby waives notice of any change, including changes of time, to the Construction Contract or to related subcontracts, purchase orders, and other obligations.

12. No suit or action shall be commenced by a Claimant under this Bond other than in a court of competent jurisdiction in the state in which the project that is the subject of the Construction Contract is located or after the expiration of one year from the date (1) on which the Claimant sent a Claim to the Surety pursuant to Paragraph 5.1.2 or 5.2, or

(2) on which the last labor or service was performed by anyone or the last materials or equipment were furnished by anyone under the Construction Contract, whichever of (1) or (2) first occurs. If the provisions of this paragraph are void or prohibited by law, the minimum period of limitation available to sureties as a defense in the jurisdiction of the suit shall be applicable.

13. Notice and Claims to the Surety, the Owner, or the Contractor shall be mailed or delivered to the address shown on the page on which their signature appears. Actual receipt of notice or Claims, however accomplished, shall be sufficient compliance as of the date received.

14. When this Bond has been furnished to comply with a statutory or other legal requirement in the location where the construction was to be performed, any provision in this Bond conflicting with said statutory or legal requirement shall be deemed deleted herefrom and provisions conforming to such statutory or other legal requirement shall be deemed incorporated herein. When so furnished, the intent is that this Bond shall be construed as a statutory bond and not as a common law bond.

15. Upon requests by any person or entity appearing to be a potential beneficiary of this Bond, the Contractor and Owner shall promptly furnish a copy of this Bond or shall permit a copy to be made.

16. **Definitions**

16.1 **Claim:** A written statement by the Claimant including at a minimum:

1. The name of the Claimant;
2. The name of the person for whom the labor was done, or materials or equipment furnished;
3. A copy of the agreement or purchase order pursuant to which labor, materials, or equipment was furnished for use in the performance of the Construction Contract;
4. A brief description of the labor, materials, or equipment furnished;
5. The date on which the Claimant last performed labor or last furnished materials or equipment for use in the performance of the Construction Contract;
6. The total amount earned by the Claimant for labor, materials, or equipment furnished as of the date of the Claim;
7. The total amount of previous payments received by the Claimant; and
8. The total amount due and unpaid to the Claimant for labor, materials, or equipment furnished as of the date of the Claim.

16.2 **Claimant:** An individual or entity having a direct contract with the Contractor or with a subcontractor of the Contractor to furnish labor, materials, or equipment for use in the performance of the Construction Contract. The term Claimant also includes any individual or entity that has rightfully asserted a claim under an applicable mechanic's lien or similar statute against the real property upon which the Project is located. The intent of this Bond shall be to include without limitation in the terms of "labor, materials, or equipment" that part of the water, gas, power, light, heat, oil, gasoline, telephone service, or rental equipment used in the Construction Contract, architectural and engineering services required for performance of the work of the Contractor and the Contractor's subcontractors, and all other items for which a mechanic's lien may be asserted in the jurisdiction where the labor, materials, or equipment were furnished.

16.3 **Construction Contract:** The agreement between the Owner and Contractor identified on the cover page, including all Contract Documents and all changes made to the agreement and the Contract Documents.

16.4 **Owner Default**: Failure of the Owner, which has not been remedied or waived, to pay the Contractor as required under the Construction Contract or to perform and complete or comply with the other material terms of the Construction Contract.

16.5 **Contract Documents:** All the documents that comprise the agreement between the Owner and Contractor.

17. If this Bond is issued for an agreement between a contractor and subcontractor, the term Contractor in this Bond shall be deemed to be Subcontractor and the term Owner shall be deemed to be Contractor.

18. Modifications to this Bond are as follows:

This page intentionally left blank

SECTION 00 55 00

SAMPLE NOTICE TO PROCEED (C-00 55 00)

Date: _____

Project:	
Owner:	Owner's Contract No.:
Contract:	Engineer's Project No.:
Contractor:	
Contractor's Address: [send Certified Mail, Return Receipt Requested]	

You are notified that the Contract Times under the above Contract will commence to run on_____. On or before that date, you are to start performing your obligations under the Contract Documents * for the following portion(s) of the Work:
Describe the limits of the Work covered

A Notice to Proceed for the remaining Work will follow.

In accordance with Article 4 of the Agreement, the date of Substantial Completion is_____, and the date of readiness for final payment is _____ [OR the number of days to achieve Substantial Completion is _____, and the number of days to achieve readiness for final payment is _____].

Before you may start any Work at the Site, Paragraph 2.01.B of the Standard General and Supplementary Conditions, and additional Supplementary Conditions if any, provide that you and Owner must each deliver to the other (with copies to Engineer and other identified additional insureds and loss payees) certificates of insurance which each is required to purchase and maintain in accordance with the Contract Documents.

Also, before you may start any Work at the Site, you must:

[add other requirements].

_____	_____
	Owner
	Given by:
_____	_____
	Authorized Signature
_____	_____
	Title
_____	_____
	Date

Copy to Engineer

SECTION 00 60 00

PROJECT FORMS

The following forms are included in this Section and shall be used for the Project as specified in the General Conditions and Supplementary Conditions if any, and the General Requirements. Completed and execution versions of these forms used during the Project shall be incorporated into the Agreement and made a part thereof.

Application for Payment Form (C-00 62 76)
Request for Interpretation/Information Form (C-00 63 15)
Field Order Form (C-00 63 36)
Work Change Directive Form (C-00 63 49)
Change Request Form (C- 00 63 60)
Change Order Form (C-00 06 63)
Notice of Substantial Completion Form (C-00 65 15)
Certificate of Substantial Completion Form (C-00 65 16)
Certificate of Completion Form (C-00 65 19)

This page intentionally left blank

EJCDC
ENGINEERS JOINT CONTRACT DOCUMENTS COMMITTEE

FORM C-006276

Contractor's Application for Payment No.

	Application Period:	Application Date:
To (Owner): Lowell Regional Water Utility	From (Contractor):	Via (Engineer):
Project: Residuals Handling Facilities Upgrade	Contract:	
Owner's Contract No.:	Contractor's Project No.:	Engineer's Project No.: 227251.3

Application For Payment

Change Order Summary

Approved Change Orders		
Number	Additions	Deductions
TOTALS		
NET CHANGE BY CHANGE ORDERS		

1. **ORIGINAL CONTRACT PRICE** ..... $ _____
2. **Net change by Change Orders** ..... $ _____
3. **Current Contract Price (Line 1 ± 2)** ..... $ _____
4. **TOTAL COMPLETED AND STORED TO DATE (Column F on Progress Estimate)** ..... $ _____
5. **RETAINAGE:**
   - a. X _____ **Work Completed** ..... $ _____
   - b. X _____ **Stored Material** ..... $ _____
   - c. **Total Retainage (Line 5a + Line 5b)** ..... $ _____
6. **AMOUNT ELIGIBLE TO DATE (Line 4 - Line 5c)** ..... $ _____
7. **LESS PREVIOUS PAYMENTS (Line 6 from prior Application)** ..... $ _____
8. **AMOUNT DUE THIS APPLICATION** ..... $ _____
9. **BALANCE TO FINISH, PLUS RETAINAGE (Column G on Progress Estimate + Line 5 above)** ..... $ _____

Contractor's Certification

The undersigned Contractor certifies that to the best of its knowledge: (1) all previous progress payments received from Owner on account of Work done under the Contract have been applied on account to discharge Contractor's legitimate obligations incurred in connection with Work covered by prior Applications for Payment; (2) title of all Work, materials and equipment incorporated in said Work or otherwise listed in or covered by this Application for Payment will pass to Owner at time of payment free and clear of all Liens, security interests and encumbrances (except such as are covered by a Bond acceptable to Owner indemnifying Owner against any such Liens, security interest or encumbrances); and (3) all Work covered by this Application for Payment is in accordance with the Contract Documents and is not defective.

By:	Date:

Payment of: $ _____
(Line 8 or other - attach explanation of the other amount)

is recommended by: _____ _____
(Engineer) (Date)

Payment of: $ _____
(Line 8 or other - attach explanation of the other amount)

is approved by: _____ _____
(Owner) (Date)

Approved by: _____ _____
Funding Agency (if applicable) (Date)

Approved by: _____ _____

© 2010 National Society of Professional Engineers for EJCDC. All rights reserved.

Progress Estimate - Lump Sum Work FORM C-006276

Contractor's Application

For (Contract):				Application Number:				
Application Period:				Application Date:				
			Work Completed		E	F		G
A		B	C	D	Materials Presently Stored (not in C or D)	Total Completed and Stored to Date (C + D + E)	% (F / B)	Balance to Finish (B - F)
Specification Section No.	Description	Scheduled Value ($)	From Previous Application (C+D)	This Period				
	Totals							

© 2010 National Society of Professional Engineers for EJCDC. All rights reserved.

Progress Estimate - Unit Price Work

FORM C-006276

Contractor's Application

For (Contract):								Application Number:			
Application Period:								Application Date:			
A				B	B(2)	C	D	E	F		
Item		Bid Item Quantity	Unit Price	Bid Item Value ($)	Estimated Quantity Installed This Month	Estimated Quantity Installed To Date (Include This Month)	Value of Work Installed to Date	Materials Presently Stored (not in C)	Total Completed and Stored to Date (D + E)	% (F / B)	Balance to Finish (B - F)
Bid Item No.	Description										
	moblize										
	Totals										

© 2010 National Society of Professional Engineers for EJCDC. All rights reserved.

Stored Material Summary FORM C-006276

Contractor's Application

For (Contract):								Application Number:			
Application Period:								Application Date:			
A		B	C		D		E		F		G
Bid Item No.	Supplier Invoice No.	Submittal No. (with Specification Section No.)	Storage Location	Description of Materials or Equpment Stored	Stored Previously		Amount Stored this Month ($)	Subtotal Amount Completed and Stored to Date (D + E)	Incorporated in Work		Materials Remaining in Storage ($) (D + E - F)
					Date Placed into Storage (Month/Year)	Amount ($)			Date (Month/ Year)	Amount ($)	
				Totals							

© 2010 National Society of Professional Engineers for EJCDC. All rights reserved.

REQUEST FOR INTERPRETATION/INFORMATION (Form C-006315)

RFI #: _____ ☐ **Attachment**

To: _____ From: _____

Attn: _____ Issue Date: _____

Project: _____ Required Reply Date: _____

DISTRIBUTION:

Contractor	Owner	Engineer
☐ _____	☐ _____	☐ _____
☐ _____	☐ _____	☐ _____
☐ _____	☐ _____	☐ _____

REFERENCES:

- Specifications: _____ Section: _____ Page/Paragraph: _____
- Drawings: _____ Issue Date: _____ Detail/Sections: _____
- Work Area: _____ Grid/Level: _____

RFI DESCRIPTION:

From: _____ Tel No: _____ Fax: No: _____

Initial: _____ E-mail: _____

RFI REPLY:

Possible Cost Effect Yes: ☐ No: ☐ **Possible Schedule Effect** Yes: ☐ No: ☐

From: _____ Reply Date: _____ xc: _____

Initial: _____ _____

Based on: CASE Form B-1999

This page intentionally left blank

Field Order (C-006336)

No. _____

Date of Issuance: _____ Effective Date: _____

Project:	Owner:	Owner's Contract No.:
Contract:		Date of Contract:
Contractor:		Engineer's Project No.:

Attention:
You are hereby directed to promptly execute this Field Order issued in accordance with General Conditions Paragraph 9.04.A, for minor changes in the Work without changes in Contract Price or Contract Times. If you consider that a change in Contract Price or Contract Times is required, please notify the Engineer immediately and before proceeding with this Work.

Reference: _____ (Specification Section(s)) _____ (Drawing(s) / Detail(s))

Description: _____

Attachments: _____

	Engineer:
Receipt Acknowledged by Contractor:	Date:

Copy to Owner

This page intentionally left blank

Work Change Directive (Form C-006349)

No. _____

Date of Issuance: _____ Effective Date: _____

Project:	Owner:	Owner's Contract No.:
Contract:		Date of Contract:
Contractor:		Engineer's Project No.:

Contractor is directed to proceed promptly with the following change(s):

Item No.	Description

Attachments (list documents supporting change):

_____

_____

Purpose for Work Change Directive:

Authorization for Work described herein to proceed on the basis of Cost of the Work due to:

- ☐ Nonagreement on pricing of proposed change.
- ☐ Necessity to expedite Work described herein prior to agreeing to changes on Contract Price and Contract Time.

Estimated change in Contract Price and Contract Times:

Contract Price $ _____ (increase/decrease) Contract Time _____ (increase/decrease)
days

Recommended for Approval by Engineer:	Date
Authorized for Owner by:	Date
Received for Contractor by:	Date
Received by Funding Agency (if applicable):	Date:

This page intentionally left blank

CHANGE REQUEST (FORM C-006360)
(Design Changes/Deviations/Substitutions)

CR NO.
DATE

Project:

Request Initiated by:
- ☐ Contractor
- ☐ Owner
- ☐ Engineer

Impact to Contract Price expected ☐
Impact to Contract Time expected ☐
Change Orders will be processed separately

Request submitted as (format):

Description of Change (☐ documentation attached)

Reason for Change

Response: ☐ This constitutes a Written Amendment to the Agreement.

Review of the proposed change/deviation/substitution by Engineer is for general compatibility with the design concept of the Project. This review does not extend to means, methods, sequences, or procedures of construction or to issues of safety incident thereto. This review shall not relieve the Contractor from responsibility for full compliance with the requirements specified and to determine and verify the information contained therein.

Recommended By Engineer for Acceptance (subject to above comments if any) ☐ recommended for processing and approval under a separate Change Order NAME: *Signature* *Date*	☐ Approved by Owner (no schedule or cost impact) ☐ Acknowledged by Owner – to be processed and approved under a separate Change Order NAME: *Signature* *Date*
Approved by Contractor ☐ Change Order to be requested NAME: *Signature* *Date*	

This page intentionally left blank

Change Order No. _____

(Form C-006363) MA

Date of Issuance: _____ Effective Date: _____

Project:	Owner:	Owner's Contract No.:
Contract:		Date of Contract:
Contractor:		Engineer's Project No.:

The Contract Documents are modified as follows upon execution of this Change Order:

Description:

Attachments (list documents supporting change):

CHANGE IN CONTRACT PRICE:	**CHANGE IN CONTRACT TIMES:**
Original Contract Price: $_____	Original Contract Times: ☐ Working days ☐ Calendar days Substantial completion (days or date): _____ Ready for final payment (days or date): _____
[Increase] [Decrease] from previously approved Change Orders No. _____ to No. _____: $_____	[Increase] [Decrease] from previously approved Change Orders No. _____ to No. _____: Substantial completion (days): _____ Ready for final payment (days): _____
Contract Price prior to this Change Order: $_____	Contract Times prior to this Change Order: Substantial completion (days or date): _____ Ready for final payment (days or date): _____
[Increase] [Decrease] of this Change Order: $_____	[Increase] [Decrease] of this Change Order: Substantial completion (days or date): _____ Ready for final payment (days or date): _____
Contract Price incorporating this Change Order: $_____	Contract Times with all approved Change Orders: Substantial completion (days or date): _____ Ready for final payment (days or date): _____

RECOMMENDED:	ACCEPTED:	ACCEPTED:
By: _____	By: _____	By: _____
Engineer (Authorized Signature)	Owner (Authorized Signature)	Contractor (Authorized Signature)
Date: _____	Date: _____	Date: _____
Approved by Funding Agency (if applicable):	Approved by Funding Agency (if applicable):	Approved by Funding Agency (if applicable):
_____	_____	_____
Date: _____	Date: _____	Date: _____

Pursuant to MGL c.44, s31C, I certify that an appropriation has been made in the total amount of the Change Order

_____ Date: _____

Owner's Auditor/Accountant (Name)

Pursuant to MGL c.30, s39I, reasons for deviation are as stated on Page 1. The specified deviation(s) does not materially injure the Project as a whole, the Work is of the same cost and quality or an equitable adjustment has been agreed upon, and the deviation is in the best interest of the Owner.

_____ Date: _____

Owner

Change Order

Instructions

A. GENERAL INFORMATION

This document was developed to provide a uniform format for handling contract changes that affect Contract Price or Contract Times. Changes that have been initiated by a Work Change Directive must be incorporated into a subsequent Change Order if they affect Price or Times.

Changes that affect Contract Price or Contract Times should be promptly covered by a Change Order. The practice of accumulating Change Orders to reduce the administrative burden may lead to unnecessary disputes.

If Milestones have been listed in the Agreement, any effect of a Change Order thereon should be addressed.

For supplemental instructions and minor changes not involving a change in the Contract Price or Contract Times, a Field Order should be used.

B. COMPLETING THE CHANGE ORDER FORM

Engineer normally initiates the form, including a description of the changes involved and attachments based upon documents and proposals submitted by Contractor, or requests from Owner, or both.

Once Engineer has completed and signed the form, all copies should be sent to Owner or Contractor for approval, depending on whether the Change Order is a true order to the Contractor or the formalization of a negotiated agreement for a previously performed change. After approval by one contracting party, all copies should be sent to the other party for approval. Engineer should make distribution of executed copies after approval by both parties.

If a change only applies to price or to times, cross out the part of the tabulation that does not apply.

This page intentionally left blank

Notice of Substantial Completion (C-006515)

Project:	Owner:	Owner's Contract No.:
Contract:		Date of Contract:
Contractor:		

This Notice of Substantial Completion applies to:

☐ The following Systems, Equipment or specified portions ☐ : All Work under the Contract Documents

:

Date of Substantial Completion for above

The following documents are attached to and made part of this Notice.

This Certificate does not constitute an acceptance of Work not in accordance with the Contract Documents nor is it a release of Contractor's obligation to complete the Work in accordance with the Contract Documents.

Accepted by Contractor — Date

Accepted by Owner — Date

This page intentionally left blank

Notice of Mechanical Completion (Form C-006515.A)

Project:	Owner:	Owner's Contract No.:
Contract:		Date of Contract:
Contractor:		

This Notice of Mechanical Completion applies to:

☐ The following Systems, Equipment or specified portions ☐ : All Work under the Contract Documents

:

Date of Mechanical Completion for above

The following documents are attached to and made part of this Notice.

This Certificate does not constitute an acceptance of Work not in accordance with the Contract Documents nor is it a release of Contractor's obligation to complete the Work in accordance with the Contract Documents.

Accepted by Contractor — Date

Accepted by Owner — Date

This page intentionally left blank

Certificate of Mechanical Completion (Form C-006515.B)

Project:	Owner:	Owner's Contract No.:
Contract:		Date of Contract:
Contractor:		

This Certificate of Mechanical Completion applies to:

☐ All Work under the Contract Documents: ☐ The following specified portions:

Date of Mechanical Completion

The Work to which this Certificate applies has been inspected by authorized representatives of Owner and Contractor, and found to mechanically complete per the General Conditions.

A Punchlist of items to be completed or corrected is attached hereto. This list may not be all-inclusive, and the failure to include any items on such list does not alter the responsibility of the Contractor to complete all Work in accordance with the Contract Documents.

The following documents are attached to and made part of this Certificate:

This Certificate does not constitute an acceptance of Work not in accordance with the Contract Documents nor is it a release of Contractor's obligation to complete the Work in accordance with the Contract Documents.

Accepted by Contractor — Date

Accepted by Owner — Date

This page intentionally left blank

Certificate of Substantial Completion (Form C-006516)

Project:	
Owner:	Owner's Contract No.:
Contract:	Engineer's Project No.:

This [tentative] [definitive] Certificate of Substantial Completion applies to:

☐ All Work under the Contract Documents: ☐ The following specified portions of the Work:

Date of Substantial Completion

The Work to which this Certificate applies has been inspected by authorized representatives of Owner, Contractor, and Engineer, and found to be substantially complete. The Date of Substantial Completion of the Project or portion thereof designated above is hereby declared and is also the date of commencement of applicable warranties required by the Contract Documents, except as stated below.

A [tentative] [definitive] list of items to be completed or corrected is attached hereto. This list may not be all-inclusive, and the failure to include any items on such list does not alter the responsibility of the Contractor to complete all Work in accordance with the Contract Documents.

The responsibilities between Owner and Contractor for security, operation, safety, maintenance, heat, utilities, insurance and warranties shall be as provided in the Contract Documents except as amended as follows:

☐ Amended Responsibilities ☐ Not Amended

Owner's Amended Responsibilities:

Contractor's Amended Responsibilities:

The following documents are attached to and made part of this Certificate:

This Certificate does not constitute an acceptance of Work not in accordance with the Contract Documents nor is it a release of Contractor's obligation to complete the Work in accordance with the Contract Documents.

Executed by Engineer	Date
Accepted by Contractor	Date
Accepted by Owner	Date

Certificate of Completion (Form C-006519)

Project:	Owner:	Owner's Contract No.:
Contract:		Date of Contract:
Contractor:		

This Certificate of Completion applies to:

☐ All Work under the Contract Documents: ☐ The following specified portions:

Date of final Completion

The Work to which this Certificate applies has been inspected by authorized representatives of Owner and Contractor, Contractor has completed all corrections to the satisfaction of Owner, delivered all required documentation, and the Project, or portion designated above, is found to be complete. The Date of Completion of the Project or portion thereof designated above is hereby declared.

Contractor may make application for final payment.

The following documents are attached to and made part of this Certificate:

Final Application for Payment

This Certificate does not constitute a release of Contractor's obligation to complete the Work in accordance with the Contract Documents.

Only the **making and acceptance of final payment** will constitute:

1. A waiver of all claims by Owner against Contractor, except claims arising from any unsettled liens, from Defective Construction appearing after final inspection; from failure to comply with the Contract Documents or the terms of any special guarantees specified therein, or from Contractor's continuing obligations under the Contract Documents; and
2. A waiver of all claims by Contractor against Owner other than those previously timely made in writing and still unsettled.

Accepted by Contractor — Date

Accepted by Owner — Date

This page intentionally left blank

This document has important legal consequences; consultation with an attorney is encouraged with respect to its use or modification. This document should be adapted to the particular circumstances of the contemplated Project and the controlling Laws and Regulations.

SECTION 00 72 05
STANDARD GENERAL CONDITIONS OF THE CONSTRUCTION CONTRACT

Prepared by

ENGINEERS JOINT CONTRACT DOCUMENTS COMMITTEE

and

Issued and Published Jointly by

ACEC
American Council of Engineering Companies

The Associated General Contractors of America
SKILL RESPONSIBILITY INTEGRITY

ASCE American Society of Civil Engineers

National Society of Professional Engineers
Professional Engineers in Private Practice

AMERICAN COUNCIL OF ENGINEERING COMPANIES

ASSOCIATED GENERAL CONTRACTORS OF AMERICA

AMERICAN SOCIETY OF CIVIL ENGINEERS

PROFESSIONAL ENGINEERS IN PRIVATE PRACTICE
A Practice Division of the
NATIONAL SOCIETY OF PROFESSIONAL ENGINEERS

Endorsed by

CSI

CONSTRUCTION SPECIFICATIONS INSTITUTE

REVISIONS HIGHLIGHTED WITHIN THE TEXT OF THIS SECTION HAVE BEEN PREPARED BY WOODARD & CURRAN ON BEHALF OF AND AS APPROVED BY OWNER

EJCDC C-700 Standard General Conditions of the Construction Contract
Copyright © 2007 National Society of Professional Engineers for EJCDC. All rights reserved.

These General Conditions have been prepared for use with the Suggested Forms of Agreement Between Owner and Contractor (EJCDC C-520 or C-525, 2007 Editions). Their provisions are interrelated and a change in one may necessitate a change in the other. Comments concerning their usage are contained in the Narrative Guide to the EJCDC Construction Documents (EJCDC C-001, 2007 Edition). For guidance in the preparation of Supplementary Conditions, see Guide to the Preparation of Supplementary Conditions (EJCDC C-800, 2007 Edition).

Copyright © 2007 National Society of Professional Engineers
1420 King Street, Alexandria, VA 22314-2794
(703) 684-2882
www.nspe.org

American Council of Engineering Companies
1015 15th Street N.W., Washington, DC 20005
(202) 347-7474
www.acec.org

American Society of Civil Engineers
1801 Alexander Bell Drive, Reston, VA 20191-4400
(800) 548-2723
www.asce.org

Associated General Contractors of America
2300 Wilson Boulevard, Suite 400, Arlington, VA 22201-3308
(703) 548-3118
www.agc.org

The copyright for this EJCDC document is owned jointly by the four EJCDC sponsoring organizations and held in trust for their benefit by NSPE.

Copyright © 2007 National Society of Professional Engineers for EJCDC. All rights reserved.

SECTION 00 72 05
STANDARD GENERAL CONDITIONS OF THE CONSTRUCTION CONTRACT

TABLE OF CONTENTS

Page

Article 1 – Definitions and Terminology 1
- 1.01 Defined Terms 1
- 1.02 Terminology 6

Article 2 – Preliminary Matters 7
- 2.01 Delivery of Bonds and Evidence of Insurance 7
- 2.02 Copies of Documents 7
- 2.03 Commencement of Contract Times; Notice to Proceed 7
- 2.04 Starting the Work 8
- 2.05 Before Starting Construction 8
- 2.06 Preconstruction Conference; Designation of Authorized Representatives 8
- 2.07 Initial Acceptance of Schedules 9

Article 3 – Contract Documents: Intent, Amending, Reuse 9
- 3.01 Intent 9
- 3.02 Reference Standards 10
- 3.03 Reporting and Resolving Discrepancies 10
- 3.04 Amending and Supplementing Contract Documents 11
- 3.05 Reuse of Documents 11
- 3.06 Electronic Data 12

Article 4 – Availability of Lands; Subsurface and Physical Conditions; Hazardous Environmental Conditions; Reference Points 12
- 4.01 Availability of Lands 12
- 4.02 Subsurface and Physical Conditions 13
- 4.03 Differing Subsurface or Physical Conditions 13
- 4.04 Underground Facilities 15
- 4.05 Reference Points 16
- 4.06 Hazardous Environmental Condition at Site 16

Article 5 – Bonds and Insurance 18
- 5.01 Performance, Payment, and Other Bonds 18
- 5.02 Licensed Sureties and Insurers 18
- 5.03 Certificates of Insurance 19
- 5.04 Contractor's Insurance 19
- 5.05 Owner's Liability Insurance 22
- 5.06 Property Insurance 22

Copyright © 2007 National Society of Professional Engineers for EJCDC. All rights reserved.

5.07 Waiver of Rights 23
5.08 Receipt and Application of Insurance Proceeds 24
5.09 Acceptance of Bonds and Insurance; Option to Replace 24
5.10 Partial Utilization, Acknowledgment of Property Insurer 25

Article 6 – Contractor's Responsibilities 25
6.01 Supervision and Superintendence 25
6.02 Labor; Working Hours 25
6.03 Services, Materials, and Equipment 26
6.04 Progress Schedule 26
6.05 Substitutes and "Or-Equals" 27
6.06 Concerning Subcontractors, Suppliers, and Others 29
6.07 Patent Fees and Royalties 31
6.08 Permits 31
6.09 Laws and Regulations 32
6.10 Taxes 32
6.11 Use of Site and Other Areas 32
6.12 Record Documents 33
6.13 Safety and Protection 33
6.14 Safety Representative 34
6.15 Hazard Communication Programs 35
6.16 Emergencies 35
6.17 Shop Drawings and Samples 35
6.18 Continuing the Work 37
6.19 Contractor's General Warranty and Guarantee 37
6.20 Indemnification 39
6.21 Delegation of Professional Design Services 40

Article 7 – Other Work at the Site 41
7.01 Related Work at Site 41
7.02 Coordination 41
7.03 Legal Relationships 42

Article 8 – Owner's Responsibilities 42
8.01 Communications to Contractor 42
8.02 Replacement of Engineer 42
8.03 Furnish Data 42
8.04 Pay When Due 42
8.05 Lands and Easements; Reports and Tests 42
8.06 Insurance 43
8.07 Change Orders 43
8.08 Inspections, Tests, and Approvals 43
8.09 Limitations on Owner's Responsibilities 43
8.10 Undisclosed Hazardous Environmental Condition 43
8.11 Evidence of Financial Arrangements 43
8.12 Compliance with Safety Program 43

Copyright © 2007 National Society of Professional Engineers for EJCDC. All rights reserved.

Article 9 – Engineer's Status During Construction 43
9.01 Owner's Representative 43
9.02 Visits to Site 44
9.03 Project Representative 44
9.04 Authorized Variations in Work 47
9.05 Rejecting Defective Work 47
9.06 Shop Drawings, Change Orders and Payments 48
9.07 Determinations for Unit Price Work 48
9.08 Decisions on Requirements of Contract Documents and Acceptability of Work 48
9.09 Limitations on Engineer's Authority and Responsibilities 49
9.10 Compliance with Safety Program 49

Article 10 – Changes in the Work; Claims 50
10.01 Authorized Changes in the Work 50
10.02 Unauthorized Changes in the Work 50
10.03 Execution of Change Orders 50
10.04 Notification to Surety 51
10.05 Claims 51

Article 11 – Cost of the Work; Allowances; Unit Price Work 52
11.01 Cost of the Work 52
11.02 Allowances 55
11.03 Unit Price Work 55

Article 12 – Change of Contract Price; Change of Contract Times 56
12.01 Change of Contract Price 56
12.02 Change of Contract Times 57
12.03 Delays 58

Article 13 – Tests and Inspections; Correction, Removal or Acceptance of Defective Work 58
13.01 Notice of Defects 58
13.02 Access to Work 59
13.03 Tests and Inspections 59
13.04 Uncovering Work 60
13.05 Owner May Stop the Work 60
13.06 Correction or Removal of Defective Work 60
13.07 Correction Period 61
13.08 Acceptance of Defective Work 62
13.09 Owner May Correct Defective Work 62

Article 14 – Payments to Contractor and Completion 63
14.01 Schedule of Values 63
14.02 Progress Payments 63
14.03 Contractor's Warranty of Title 66
14.04 Substantial Completion 66
14.05 Partial Utilization 67
14.06 Final Inspection 68

Copyright © 2007 National Society of Professional Engineers for EJCDC. All rights reserved.
Revisions highlighted within the text have been prepared by Woodard & Curran on behalf of and are as approved by Owner

14.07 Final Payment 68
14.08 Final Completion Delayed 69
14.09 Waiver of Claims 69

Article 15 – Suspension of Work and Termination 70
15.01 Owner May Suspend Work 70
15.02 Owner May Terminate for Cause 70
15.03 Owner May Terminate For Convenience 72
15.04 Contractor May Stop Work or Terminate 72

Article 16 – Dispute Resolution 73
16.01 Methods and Procedures 73
16.02 Arbitration ..... **Error! Bookmark not defined.**~~74~~
16.03 General ..... **Error! Bookmark not defined.**~~75~~

Article 17 – Miscellaneous ..... 73~~75~~
17.01 Giving Notice ..... 73~~75~~
17.02 Computation of Times ..... 74~~76~~
17.03 Cumulative Remedies ..... 74~~76~~
17.04 Survival of Obligations ..... 74~~76~~
17.05 Controlling Law ..... 74~~76~~
17.06 Headings ..... 74~~76~~
17.07 Professional Fees and Court Costs Included ..... 74~~76~~

Copyright © 2007 National Society of Professional Engineers for EJCDC. All rights reserved.

ARTICLE 1 – DEFINITIONS AND TERMINOLOGY

1.01 *Defined Terms*

A. Wherever used in the Bidding Requirements or Contract Documents and printed with initial capital letters, the terms listed below will have the meanings indicated which are applicable to both the singular and plural thereof. In addition to terms specifically defined, terms with initial capital letters in the Contract Documents include references to identified articles and paragraphs, and the titles of other documents or forms.

1. *Addenda*—Written or graphic instruments issued prior to the opening of Bids which clarify, correct, or change the Bidding Requirements or the proposed Contract Documents.

2. *Agreement*—The written instrument which is evidence of the agreement between Owner and Contractor covering the Work.

3. *Application for Payment*—The form acceptable to Engineer which is to be used by Contractor during the course of the Work in requesting progress or final payments and which is to be accompanied by such supporting documentation as is required by the Contract Documents.

4. *Asbestos*—Any material that contains more than one percent asbestos and is friable or is releasing asbestos fibers into the air above current action levels established by the United States Occupational Safety and Health Administration.

5. *Bid*—The offer or proposal of a Bidder submitted on the prescribed form setting forth the prices for the Work to be performed. May also be referred to as "Proposal" which may be used interchangeably and shall have the same meaning.

6. *Bidder*—The individual or entity who submits a Bid directly to Owner.

7. *Bidding Documents*—The Bidding Requirements and the proposed Contract Documents (including all Addenda).

8. *Bidding Requirements*—The advertisement or invitation to bid, Instructions to Bidders, Bid security of acceptable form, if any, and the Bid Form with any supplements.

9. *Change Order*—A document recommended by Engineer which is signed by Contractor and Owner and authorizes an addition, deletion, or revision in the Work or an adjustment in the Contract Price or the Contract Times, issued on or after the Effective Date of the Agreement.

10. *Claim*—A demand or assertion by Owner or Contractor seeking an adjustment of Contract Price or Contract Times, or both, or other relief with respect to the terms of the Contract. A demand for money or services by a third party is not a Claim.

11. *Contract*—The entire and integrated written agreement between the Owner and Contractor concerning the Work. The Contract supersedes prior negotiations, representations, or agreements, whether written or oral.

Copyright © 2007 National Society of Professional Engineers for EJCDC. All rights reserved.
Revisions highlighted within the text have been prepared by Woodard & Curran on behalf of and are as approved by Owner (LOWELL)

12. *Contract Documents*—Those items so designated in the Agreement. Only printed or hard copies of the items listed in the Agreement are Contract Documents. Approved Shop Drawings, other Contractor submittals, and the reports and drawings of subsurface and physical conditions are not Contract Documents.

13. *Contract Price*—The moneys payable by Owner to Contractor for completion of the Work in accordance with the Contract Documents as stated in the Agreement (subject to the provisions of Paragraph 11.03 in the case of Unit Price Work).

14. *Contract Times*—The number of days or the dates stated in the Agreement to: (i) achieve Milestones, if any; (ii) achieve Substantial Completion; and (iii) complete the Work so that it is ready for final payment as evidenced by Engineer's written recommendation of final payment.

15. *Contractor*—The individual or entity with whom Owner has entered into the Agreement.

16. *Cost of the Work*—See Paragraph 11.01 for definition.

17. *Drawings*—That part of the Contract Documents prepared or approved by Engineer which graphically shows the scope, extent, and character of the Work to be performed by Contractor and complement the Specifications. Shop Drawings and other Contractor submittals are not Drawings as so defined. May also referred to as "Plans", which may be used interchangeably and shall have the same meaning. Notes on Drawings are directed to Contractor unless specifically noted otherwise.

18. *Effective Date of the Agreement*—The date indicated in the Agreement on which it becomes effective, but if no such date is indicated, it means the date on which the Agreement is signed and delivered by the last of the two parties to sign and deliver.

19. *Engineer*—The individual or entity named as such in the Agreement.

20. *Field Order*—A written order issued by Engineer which requires minor changes in the Work but which does not involve a change in the Contract Price or the Contract Times.

21. *General Requirements*—Sections of Division 01 of the Specifications which govern the Work of all sections of the Specifications.

22. *Hazardous Environmental Condition*—The presence at the Site of Asbestos, PCBs, Petroleum, Hazardous Waste, or Radioactive Material in such quantities or circumstances that may present a substantial danger to persons or property exposed thereto.

23. *Hazardous Waste*—The term Hazardous Waste shall have the meaning provided in Section 1004 of the Solid Waste Disposal Act (42 USC Section 6903) as amended from time to time.

24. *Laws and Regulations; Laws or Regulations*—Any and all applicable laws, rules, regulations, ordinances, codes, and orders of any and all governmental bodies, agencies, authorities, and courts having jurisdiction. See Paragraph 17.05 of these General Conditions.

Copyright © 2007 National Society of Professional Engineers for EJCDC. All rights reserved.

25. *Liens*—Charges, security interests, or encumbrances upon Project funds, real property, or personal property.

26. *Milestone*—A principal event specified in the Contract Documents relating to an intermediate completion date or time prior to Substantial Completion of all the Work.

27. *Notice of Award*—The written notice by Owner to the Successful Bidder stating that upon timely compliance by the Successful Bidder with the conditions precedent listed therein, Owner will sign and deliver the Agreement.

28. *Notice to Proceed*—A written notice given by Owner to Contractor fixing the date on which the Contract Times will commence to run and on which Contractor shall start to perform the Work under the Contract Documents.

29. *Owner*—The individual or entity with whom Contractor has entered into the Agreement and for whom the Work is to be performed.

30. *PCBs*—Polychlorinated biphenyls.

31. *Petroleum*—Petroleum, including crude oil or any fraction thereof which is liquid at standard conditions of temperature and pressure (60 degrees Fahrenheit and 14.7 pounds per square inch absolute), such as oil, petroleum, fuel oil, oil sludge, oil refuse, gasoline, kerosene, and oil mixed with other non-Hazardous Waste and crude oils.

32. *Progress Schedule*—A schedule, prepared and maintained by Contractor, describing the sequence and duration of the activities comprising the Contractor's plan to accomplish the Work within the Contract Times. May also be referred to as "Construction Schedule", which may be used interchangeably and shall have the same meaning.

33. *Project*—The total construction of which the Work to be performed under the Contract Documents may be the whole, or a part.

34. *Project Manual*—The bound documentary information prepared for bidding and constructing the Work. A listing of the contents of the Project Manual, which may be bound in one or more volumes, is contained in the table(s) of contents.

35. *Radioactive Material*—Source, special nuclear, or byproduct material as defined by the Atomic Energy Act of 1954 (42 USC Section 2011 et seq.) as amended from time to time.

36. *Resident Project Representative*—The authorized representative of Engineer who may be assigned to the Site or any part thereof.

37. *Samples*—Physical examples of materials, equipment, or workmanship that are representative of some portion of the Work and which establish the standards by which such portion of the Work will be judged.

Copyright © 2007 National Society of Professional Engineers for EJCDC. All rights reserved.

38. *Schedule of Submittals*—A schedule, prepared and maintained by Contractor, of required submittals and the time requirements to support scheduled performance of related construction activities.

39. *Schedule of Values*—A schedule, prepared and maintained by Contractor, allocating portions of the Contract Price to various portions of the Work and used as the basis for reviewing Contractor's Applications for Payment.

40. *Shop Drawings*—All drawings, diagrams, illustrations, schedules, and other data or information which are specifically prepared or assembled by or for Contractor and submitted by Contractor to illustrate some portion of the Work.

41. *Site*—Lands or areas indicated in the Contract Documents as being furnished by Owner upon which the Work is to be performed, including rights-of-way and easements for access thereto, and such other lands furnished by Owner which are designated for the use of Contractor.

42. *Specifications*—That part of the Contract Documents consisting of written requirements for materials, equipment, systems, standards and workmanship as applied to the Work, and certain administrative requirements and procedural matters applicable thereto. The Specifications are based on the guidelines of the Construction Specifications Institute (CSI) Project Resource Manual, and are directed to Contractor unless specifically noted otherwise. The words "shall be" are included by inference where a colon (:) is used within sentences or phrases in the Specifications.

43. *Subcontractor*—An individual or entity having a direct contract with Contractor or with any other Subcontractor for the performance of a part of the Work at the Site.

44. *Substantial Completion*—The time at which the Work (or a specified part thereof) has progressed to the point where, in the opinion of Engineer, the Work (or a specified part thereof) is sufficiently complete, in accordance with the Contract Documents, so that the Work (or a specified part thereof) can be utilized for the purposes for which it is intended. The terms "substantially complete" and "substantially completed" as applied to all or part of the Work refer to Substantial Completion thereof.

45. *Successful Bidder*—The Bidder submitting a responsive Bid to whom Owner makes an award.

46. *Supplementary Conditions*—That part of the Contract Documents which amends or supplements these General Conditions, have been prepared by Engineer on behalf of and are as approved by Owner.

47. *Supplier*—A manufacturer, fabricator, supplier, distributor, materialman, or vendor having a direct contract with Contractor or with any Subcontractor to furnish materials or equipment to be incorporated in the Work by Contractor or Subcontractor.

Copyright © 2007 National Society of Professional Engineers for EJCDC. All rights reserved.

48. *Underground Facilities*—All underground pipelines, conduits, ducts, cables, wires, manholes, vaults, tanks, tunnels, or other such facilities or attachments, and any encasements containing such facilities, including those that convey electricity, gases, steam, liquid petroleum products, telephone or other communications, cable television, water, wastewater, storm water, other liquids or chemicals, or traffic or other control systems.

49. *Unit Price Work*—Work to be paid for on the basis of unit prices.

50. *Work*—The entire construction or the various separately identifiable parts thereof required to be provided under the Contract Documents. Work includes and is the result of performing or providing all labor, services, and documentation necessary to produce such construction, and furnishing, installing, and incorporating all materials and equipment into such construction, all as required by the Contract Documents.

51. *Work Change Directive*—A written statement to Contractor issued on or after the Effective Date of the Agreement and signed by Owner and recommended by Engineer ordering an addition, deletion, or revision in the Work, or responding to differing or unforeseen subsurface or physical conditions under which the Work is to be performed or to emergencies. A Work Change Directive will not change the Contract Price or the Contract Times but is evidence that the parties expect that the change ordered or documented by a Work Change Directive will be incorporated in a subsequently issued Change Order following negotiations by the parties as to its effect, if any, on the Contract Price or Contract Times.

B. Additional Terms

1. *Final Completion*—The time at which all Work is completed and ready for final payment in accordance with Paragraph 14.07 of these General Conditions.

2. *Industry Practice*—The written practices, methods, materials, supplies and equipment, as changed from time to time, that are commonly used in the industry applicable to the Project to design, construct and operate facilities and plants, or any practices, methods and acts, which in the exercise of reasonable judgment in light of the facts known at the time, could have been expected to accomplish the desired results consistent with good business practices, reliability, safety and expedition.

3. *Punch List*—a list of open items representing portions of the Work which Contractor, Engineer, Owner reasonably agree is not complete on the date of Substantial Completion or Final Completion, but which items will not significantly interfere with the safe, reliable operation and integrity of the Project or its intended use.

4. *Purchase Order*—A written agreement between Contractor and a Supplier for provision of material and equipment.

5. *Warranty Period*—the correction period after the date of Substantial Completion per Paragraph 13.07 of these General Conditions.

Copyright © 2007 National Society of Professional Engineers for EJCDC. All rights reserved.
Revisions highlighted within the text have been prepared by Woodard & Curran on behalf of and are as approved by Owner (LOWELL)

1.02 *Terminology*

A. The words and terms discussed in Paragraph 1.02.B through F are not defined but, when used in the Bidding Requirements or Contract Documents, have the indicated meaning.

B. Intent of Certain Terms or Adjectives:

1. The Contract Documents include the terms "as allowed," "as approved," "as ordered," "as directed" or terms of like effect or import to authorize an exercise of professional judgment by Engineer. In addition, the adjectives "reasonable," "suitable," "acceptable," "proper," "satisfactory," or adjectives of like effect or import are used to describe an action or determination of Engineer as to the Work. It is intended that such exercise of professional judgment, action, or determination will be solely to evaluate, in general, the Work for compliance with the information in the Contract Documents and with the design concept of the Project as a functioning whole as shown or indicated in the Contract Documents (unless there is a specific statement indicating otherwise). The use of any such term or adjective is not intended to and shall not be effective to assign to Engineer any duty or authority to supervise or direct the performance of the Work, or any duty or authority to undertake responsibility contrary to the provisions of Paragraph 9.09 or any other provision of the Contract Documents.

C. Day:

1. The word "day" means a calendar day of 24 hours measured from midnight to the next midnight. However, in limited instances the parties have agreed explicitly by context to use the terms "business day" or "working day" to further define the meaning of the term day. See also Paragraph 17.02 of these General Conditions.

D. Defective:

1. The word "defective," when modifying the word "Work," refers to Work that is unsatisfactory, faulty, or deficient in that it:

a. does not conform to the Contract Documents; or

b. does not meet the requirements of any applicable inspection, reference standard, test, or approval referred to in the Contract Documents; or

c. has been damaged prior to Engineer's recommendation of final payment (unless responsibility for the protection thereof has been assumed by Owner at Substantial Completion in accordance with Paragraph 14.04 or 14.05).

E. Furnish, Install, Perform, Provide:

1. The word "furnish," when used in connection with services, materials, or equipment, shall mean to supply and deliver said services, materials, or equipment to the Site (or some other specified location) ready for use or installation and in usable or operable condition.

Copyright © 2007 National Society of Professional Engineers for EJCDC. All rights reserved.

2. The word "install," when used in connection with services, materials, or equipment, shall mean to put into use or place in final position said services, materials, or equipment complete and ready for intended use.

3. The words "perform" or "provide," when used in connection with services, materials, or equipment, shall mean to furnish and install said services, materials, or equipment complete and ready for intended use.

4. When "furnish," "install," "perform," or "provide" is not used in connection with services, materials, or equipment in a context clearly requiring an obligation of Contractor, "provide" is implied.

F. Unless stated otherwise in the Contract Documents, words or phrases that have a well-known technical or construction industry or trade meaning are used in the Contract Documents in accordance with such recognized meaning.

ARTICLE 2 – PRELIMINARY MATTERS

2.01 *Delivery of Bonds and Evidence of Insurance*

A. ~~When Contractor delivers the executed counterparts~~Prior to execution of the Agreement ~~to Owner~~, Contractor shall ~~also~~ deliver to Owner such bonds as Contractor may be required to furnish.

B. *Evidence of Insurance:* Prior to execution of the Agreement and b~~B~~efore any Work at the Site is started, Contractor and Owner shall each deliver to the other, with copies to each additional insured identified in the Conditions, certificates of insurance (and other evidence of insurance which either of them or any additional insured may reasonably request) which Contractor and Owner respectively are required to purchase and maintain in accordance with Article 5.

2.02 *Copies of Documents*

A. Owner shall furnish to Contractor up to ~~ten~~ 5 printed or hard copies of the Contract Documents or Drawings and Project Manual. Additional copies will be furnished upon request at the cost of reproduction.

2.03 *Commencement of Contract Times; Notice to Proceed*

A. The Contract Times will commence to run on the thirtieth day after the Effective Date of the Agreement or, if a Notice to Proceed is given, on the day indicated in the Notice to Proceed. A Notice to Proceed may be given at any time within 30 days after the Effective Date of the Agreement. In no event will the Contract Times commence to run later than the ~~sixtieth~~ 90th day after the day of Bid opening or the thirtieth day after the Effective Date of the Agreement, unless mutually agreed otherwise.~~, whichever date is earlier.~~

Copyright © 2007 National Society of Professional Engineers for EJCDC. All rights reserved.

2.04 *Starting the Work*

A. Contractor shall start to perform the Work on the date when the Contract Times commence to run. No Work shall be done at the Site prior to the date on which the Contract Times commence to run.

2.05 *Before Starting Construction*

A. *Preliminary Schedules:* Within 10 days after the Effective Date of the Agreement (unless otherwise specified in the General Requirements), Contractor shall submit to Engineer for timely review:

1. a preliminary Progress Schedule indicating the times (numbers of days or dates) for starting and completing the various stages of the Work, including any Milestones specified in the Contract Documents, and the lead times for equipment and materials per the listing in subparagraph 2.05.A.4;

2. a preliminary Schedule of Submittals; and

3. a preliminary Schedule of Values for all of the Work which includes quantities and prices of items which when added together equal the Contract Price and subdivides the Work into component parts in sufficient detail to serve as the basis for progress payments during performance of the Work, which will be confirmed in writing by Contractor at the time of submission. Such prices will include an appropriate amount of overhead and profit applicable to each item of Work; and.

4. a complete listing of equipment and materials with lead times between placing orders and delivery, including normal allowances of time for processing and correcting Shop Drawings. All orders for long lead items shall be placed within 30 days after Effective Date of the Agreement if delivery is critical to scheduling. Failure to place orders promptly may result in full liability for liquidated damages if Contract Times are not met.

B. *Evidence of Insurance*: In accordance with Paragraph 2.01.

2.06 *Preconstruction Conference; Designation of Authorized Representatives*

A. Before any Work at the Site is started, a conference attended by Owner, Contractor, Engineer, and others as appropriate will be held to establish a working understanding among the parties as to the Work and to discuss the schedules referred to in Paragraph 2.05.A, procedures for handling Shop Drawings and other submittals, processing Applications for Payment, and maintaining required records in accordance with the General Requirements.

B. At this conference Owner and Contractor each shall designate, in writing, a specific individual to act as its authorized representative with respect to the services and responsibilities under the Contract. Such individuals shall have the authority to transmit instructions, receive information, render decisions relative to the Contract, and otherwise act on behalf of each respective party.

Copyright © 2007 National Society of Professional Engineers for EJCDC. All rights reserved.

2.07 *Initial Acceptance of Schedules*

A. At least 10 days before submission of the first Application for Payment a conference attended by Contractor, Engineer, and others as appropriate will be held to review for acceptability to Engineer as provided below the schedules submitted in accordance with Paragraph 2.05.A. Contractor shall have an additional 10 days to make corrections and adjustments and to complete and resubmit the schedules. No progress payment shall be made to Contractor until acceptable schedules are submitted to Engineer.

1. The Progress Schedule will be acceptable to Engineer if it provides an orderly progression of the Work to completion within the Contract Times. Such acceptance will not impose on Engineer responsibility for the Progress Schedule, for sequencing, scheduling, or progress of the Work, nor interfere with or relieve Contractor from Contractor's full responsibility therefor.

2. Contractor's Schedule of Submittals will be acceptable to Engineer if it provides a workable arrangement for reviewing and processing the required submittals.

3. Contractor's Schedule of Values will be acceptable to Engineer as to form and substance if it provides a reasonable allocation of the Contract Price to component parts of the Work.

ARTICLE 3 – CONTRACT DOCUMENTS: INTENT, AMENDING, REUSE

3.01 *Intent*

A. The Contract Documents are complementary; what is required by one is as binding as if required by all and comprise the entire agreement between Owner and Contractor concerning the Work. If any term or provision of any of the Contract Documents, or the application thereof to any party or circumstance shall, to any extent, be determined to be invalid or unenforceable, the remaining provisions of the Contract Documents, or the application of such term or provision to parties or circumstances other than those as to which it is held invalid or unenforceable, shall not be affected thereby, and each term and provision of each of the Contract Documents shall be valid and shall be enforced to the fullest extent permitted by Laws and Regulations.

B. It is the intent of the Contract Documents to describe a functionally complete project (or part thereof) to be constructed in accordance with the Contract Documents. Any labor, documentation, services, materials, or equipment that reasonably may be inferred from the Contract Documents or from prevailing custom or trade usage as being required to produce the indicated result will be provided whether or not specifically called for, at no additional cost to Owner.

C. Clarifications and interpretations of the Contract Documents shall be issued by Engineer as provided in Article 9.

Copyright © 2007 National Society of Professional Engineers for EJCDC. All rights reserved.
Revisions highlighted within the text have been prepared by Woodard & Curran on behalf of and are as approved by Owner (LOWELL)

3.02 *Reference Standards*

A. Standards, Specifications, Codes, Laws, and Regulations

1. Reference to standards, specifications, manuals, or codes of any technical society, organization, or association, or to Laws or Regulations, whether such reference be specific or by implication, shall mean the standard, specification, manual, code, or Laws or Regulations in effect at the time of opening of Bids (or on the Effective Date of the Agreement if there were no Bids), except as may be otherwise specifically stated in the Contract Documents.

2. No provision of any such standard, specification, manual, or code, or any instruction of a Supplier, shall be effective to change the duties or responsibilities of Owner, Contractor, or Engineer, or any of their subcontractors, consultants, agents, or employees, from those set forth in the Contract Documents. No such provision or instruction shall be effective to assign to Owner, Engineer, or any of their officers, directors, members, partners, employees, agents, consultants, or subcontractors, any duty or authority to supervise or direct the performance of the Work or any duty or authority to undertake responsibility inconsistent with the provisions of the Contract Documents.

3.03 *Reporting and Resolving Discrepancies*

A. Reporting Discrepancies:

1. *Contractor's Review of Contract Documents Before Starting Work*: Before undertaking each part of the Work, Contractor shall carefully study and compare the Contract Documents and check and verify pertinent figures therein and all applicable field measurements. Contractor shall promptly report in writing to Engineer any conflict, error, ambiguity, or discrepancy which Contractor discovers, or has actual knowledge of, and shall obtain a written interpretation or clarification from Engineer before proceeding with any Work affected thereby.

2. *Contractor's Review of Contract Documents During Performance of Work*: If, during the performance of the Work, Contractor discovers any conflict, error, ambiguity, or discrepancy within the Contract Documents, or between the Contract Documents and (a) any applicable Law or Regulation , (b) any standard, specification, manual, or code, or (c) any instruction of any Supplier, then Contractor shall promptly report it to Engineer in writing. Contractor shall not proceed with the Work affected thereby (except in an emergency as required by Paragraph 6.16.A) until an amendment or supplement to the Contract Documents has been issued by one of the methods indicated in Paragraph 3.04.

3. Contractor shall not be liable to Owner or Engineer for failure to report any conflict, error, ambiguity, or discrepancy in the Contract Documents unless Contractor had actual knowledge thereof.

Copyright © 2007 National Society of Professional Engineers for EJCDC. All rights reserved.
Revisions highlighted within the text have been prepared by Woodard & Curran on behalf of and are as approved by Owner (LOWELL)

B. Resolving Discrepancies:

1. Except as may be otherwise specifically stated in the Contract Documents, the provisions of the Contract Documents shall take precedence in resolving any conflict, error, ambiguity, or discrepancy between the provisions of the Contract Documents and:

a. the provisions of any standard, specification, manual, or code, or the instruction of any Supplier (whether or not specifically incorporated by reference in the Contract Documents); or

b. the provisions of any Laws or Regulations applicable to the performance of the Work (unless such an interpretation of the provisions of the Contract Documents would result in violation of such Law or Regulation).

3.04 *Amending and Supplementing Contract Documents*

A. The Contract Documents may be amended to provide for additions, deletions, and revisions in the Work or to modify the terms and conditions thereof by either a Change Order or a Work Change Directive.

B. The requirements of the Contract Documents may be supplemented, and minor variations and deviations in the Work may be authorized, by one or more of the following ways:

1. A Field Order;

2. Engineer's approval of a Shop Drawing or Sample (subject to the provisions of Paragraph 6.17.D.3); or

3. Engineer's written interpretation or clarification; or

4. A Change Request.

3.05 *Reuse of Documents*

A. Contractor and any Subcontractor or Supplier shall not:

1. have or acquire any title to or ownership rights in any of the Drawings, Specifications, or other documents (or copies of any thereof) prepared by or bearing the seal of Engineer or its consultants, including electronic media editions; or

2. reuse any such Drawings, Specifications, other documents, or copies thereof on extensions of the Project or any other project without written consent of Owner and Engineer and specific written verification or adaptation by Engineer.

B. The prohibitions of this Paragraph 3.05 will survive final payment, or termination of the Contract. Nothing herein shall preclude Contractor from retaining copies of the Contract Documents for record purposes.

Copyright © 2007 National Society of Professional Engineers for EJCDC. All rights reserved.
Revisions highlighted within the text have been prepared by Woodard & Curran on behalf of and are as approved by Owner (LOWELL)

3.06 *Electronic Data*

A. Unless otherwise stated in the Supplementary Conditions, the data furnished by Owner or Engineer to Contractor, or by Contractor to Owner or Engineer, that may be relied upon are limited to the printed copies (also known as hard copies). Files in electronic media format of text, data, graphics, or other types are furnished only for the convenience of the receiving party. Any conclusion or information obtained or derived from such electronic files will be at the user's sole risk. If there is a discrepancy between the electronic files and the hard copies, the hard copies govern.

1. The Contractor may rely upon files transmitted to the Contractor in portable document format (PDF) which are understood by all parties to constitute official Project correspondence such as a response to a request for information or submittal review furnished by Owner or Engineer.

B. Because data stored in electronic media format can deteriorate or be modified inadvertently or otherwise without authorization of the data's creator, the party receiving electronic files agrees that it will perform acceptance tests or procedures within 60 days, after which the receiving party shall be deemed to have accepted the data thus transferred. Any errors detected within the 60-day acceptance period will be corrected by the transferring party.

C. When transferring documents in electronic media format, the transferring party makes no representations as to long term compatibility, usability, or readability of documents resulting from the use of software application packages, operating systems, or computer hardware differing from those used by the data's creator.

ARTICLE 4 – AVAILABILITY OF LANDS; SUBSURFACE AND PHYSICAL CONDITIONS; HAZARDOUS ENVIRONMENTAL CONDITIONS; REFERENCE POINTS

4.01 *Availability of Lands*

A. Owner shall furnish the Site. Owner shall notify Contractor of any encumbrances or restrictions not of general application but specifically related to use of the Site with which Contractor must comply in performing the Work. Owner will obtain in a timely manner and pay for easements for permanent structures or permanent changes in existing facilities. If Contractor and Owner are unable to agree on entitlement to or on the amount or extent, if any, of any adjustment in the Contract Price or Contract Times, or both, as a result of any delay in Owner's furnishing the Site or a part thereof, Contractor may make a Claim therefor as provided in Paragraph 10.05.

B. Upon reasonable written request, Owner shall furnish Contractor with a current statement of record legal title and legal description of the lands upon which the Work is to be performed and Owner's interest therein as necessary for giving notice of or filing a mechanic's or construction lien against such lands in accordance with applicable Laws and Regulations.

C. Contractor shall provide for all additional lands and access thereto that may be required for temporary construction facilities or storage of materials and equipment.

Copyright © 2007 National Society of Professional Engineers for EJCDC. All rights reserved.

4.02 *Subsurface and Physical Conditions*

A. *Reports and Drawings:* The Supplementary Conditions identify:

1. those reports known to Owner of explorations and tests of subsurface conditions at or contiguous to the Site; and

2. those drawings known to Owner of physical conditions relating to existing surface or subsurface structures at the Site (except Underground Facilities).

B. *Limited Reliance by Contractor on Technical Data Authorized:* Contractor may rely upon the accuracy of the "technical data" contained in such reports and drawings, but such reports and drawings are not Contract Documents. Such "technical data" is identified in the Supplementary Conditions. Except for such reliance on such "technical data," Contractor may not rely upon or make any claim against Owner or Engineer, or any of their officers, directors, members, partners, employees, agents, consultants, or subcontractors with respect to:

1. the completeness of such reports and drawings for Contractor's purposes, including, but not limited to, any aspects of the means, methods, techniques, sequences, and procedures of construction to be employed by Contractor, and safety precautions and programs incident thereto; or

2. other data, interpretations, opinions, and information contained in such reports or shown or indicated in such drawings; or

3. any Contractor interpretation of or conclusion drawn from any "technical data" or any such other data, interpretations, opinions, or information.

4.03 *Differing Subsurface or Physical Conditions*

A. *Notice:* If Contractor believes that any subsurface or physical condition that is uncovered or revealed either:

1. is of such a nature as to establish that any "technical data" on which Contractor is entitled to rely as provided in Paragraph 4.02 is materially inaccurate; or

2. is of such a nature as to require a change in the Contract Documents; or

3. differs materially from that shown or indicated in the Contract Documents; or

4. is of an unusual nature, and differs materially from conditions ordinarily encountered and generally recognized as inherent in work of the character provided for in the Contract Documents;

then Contractor shall, promptly after becoming aware thereof and before further disturbing the subsurface or physical conditions or performing any Work in connection therewith (except in an emergency as required by Paragraph 6.16.A), notify Owner and Engineer in writing about such condition. Contractor shall not further disturb such condition or perform any Work in connection therewith (except as aforesaid) until receipt of written order to do so.

Copyright © 2007 National Society of Professional Engineers for EJCDC. All rights reserved.
Revisions highlighted within the text have been prepared by Woodard & Curran on behalf of and are as approved by Owner (LOWELL)

B. (Not Used)~~*Engineer's Review*: After receipt of written notice as required by Paragraph 4.03.A, Engineer will promptly review the pertinent condition, determine the necessity of Owner's obtaining additional exploration or tests with respect thereto, and advise Owner in writing (with a copy to Contractor) of Engineer's findings and conclusions.~~

C. Possible Price and Times Adjustments:

1. The Contract Price or the Contract Times, or both, ~~will~~ may be equitably adjusted to the extent that the existence of such differing subsurface or physical condition causes an increase or decrease in Contractor's cost of, or time required for, performance of the Work; subject, however, to the following:

   a. such condition must meet any one or more of the categories described in Paragraph 4.03.A; and

   b. with respect to Work that is paid for on a unit price basis, any adjustment in Contract Price will be subject to the provisions of Paragraphs 9.07 and 11.03.

2. Contractor shall not be entitled to any adjustment in the Contract Price or Contract Times if:

   a. Contractor knew of the existence of such conditions at the time Contractor made a final commitment to Owner with respect to Contract Price and Contract Times by the submission of a Bid or becoming bound under a negotiated contract; or

   b. the existence of such condition could reasonably have been discovered or revealed as a result of any examination, investigation, exploration, test, or study of the Site and contiguous areas required by the Bidding Requirements or Contract Documents to be conducted by or for Contractor prior to Contractor's making such final commitment; ~~or~~

   c. Contractor failed to give the written notice as required by Paragraph 4.03.A,or

   ~~c.~~d. written notice is submitted after final payment.

3. If Owner and Contractor are unable to agree on entitlement to or on the amount or extent, if any, of any adjustment in the Contract Price or Contract Times, or both, a Claim may be made therefor as provided in Paragraph 10.05. However, neither Owner or Engineer, or any of their officers, directors, members, partners, employees, agents, consultants, or subcontractors shall be liable to Contractor for any claims, costs, losses, or damages (including but not limited to all fees and charges of engineers, architects, attorneys, and other professionals and all court or arbitration or other dispute resolution costs) sustained by Contractor on or in connection with any other project or anticipated project.

Copyright © 2007 National Society of Professional Engineers for EJCDC. All rights reserved.

4.04 *Underground Facilities*

A. *Shown or Indicated:* The information and data shown or indicated in the Contract Documents with respect to existing Underground Facilities at or contiguous to the Site is based on information and data furnished to Owner or Engineer by the owners of such Underground Facilities, including Owner, or by others. Unless it is otherwise expressly provided in the Supplementary Conditions:

1. Owner and Engineer shall not be responsible for the accuracy or completeness of any such information or data provided by others; and

2. the cost of all of the following will be included in the Contract Price, and Contractor shall have full responsibility for:

   a. reviewing and checking all such information and data;

   b. locating all Underground Facilities shown or indicated in the Contract Documents;

   c. coordination of the Work with the owners of such Underground Facilities, including Owner, during construction; and

   d. the safety and protection of all such Underground Facilities and repairing any damage thereto resulting from the Work.

B. Not Shown or Indicated:

1. If an Underground Facility is uncovered or revealed at or contiguous to the Site which was not shown or indicated, or not shown or indicated with reasonable accuracy in the Contract Documents, Contractor shall, promptly after becoming aware thereof and before further disturbing conditions affected thereby or performing any Work in connection therewith (except in an emergency as required by Paragraph 6.16.A), identify the owner of such Underground Facility and give written notice to that owner and to Owner and Engineer. Engineer will promptly review the Underground Facility and determine the extent, if any, to which a change is required in the Contract Documents to reflect and document the consequences of the existence or location of the Underground Facility. During such time, Contractor shall be responsible for the safety and protection of such Underground Facility.

2. If Engineer concludes that a change in the Contract Documents is required, a Work Change Directive or a Change Order will be issued to reflect and document such consequences. An equitable adjustment shall be made in the Contract Price or Contract Times, or both, to the extent that they are attributable to the existence or location of any Underground Facility that was not shown or indicated or not shown or indicated with reasonable accuracy in the Contract Documents and that Contractor did not know of and could not reasonably have been expected to be aware of or to have anticipated. If Owner and Contractor are unable to agree on entitlement to or on the amount or extent, if any, of any such adjustment in Contract Price or Contract Times, Owner or Contractor may make a Claim therefor as provided in Paragraph 10.05.

Copyright © 2007 National Society of Professional Engineers for EJCDC. All rights reserved.
Revisions highlighted within the text have been prepared by Woodard & Curran on behalf of and are as approved by Owner (LOWELL)

3. Owner and Engineer, and the officers, directors, members, partners, employees, agents, consultants and subcontractors of each and any of them, shall not be liable to Contractor for any Claims, losses, or damages incurred by Contractor (including but not limited to all fees and changes of engineers, architects, attorneys, and other professionals and all court or arbitration or other dispute resolution costs) related to Underground Facilities not shown or indicated.

4.05 *Reference Points*

A. Owner shall provide engineering surveys to establish reference points for construction which in Engineer's judgment are necessary to enable Contractor to proceed with the Work. Contractor shall be responsible for laying out the Work, shall protect and preserve the established reference points and property monuments, and shall make no changes or relocations without the prior written approval of Owner. Contractor shall report to Engineer whenever any reference point or property monument is lost or destroyed or requires relocation because of necessary changes in grades or locations, and shall be responsible for the accurate replacement or relocation of such reference points or property monuments by professionally qualified personnel.

4.06 *Hazardous Environmental Condition at Site*

A. *Reports and Drawings:* The Supplementary Conditions identify those reports and drawings known to Owner relating to Hazardous Environmental Conditions that have been identified at the Site.

B. *Limited Reliance by Contractor on Technical Data Authorized:* Contractor may rely upon the accuracy of the "technical data" contained in such reports and drawings, but such reports and drawings are not Contract Documents. Such "technical data" is identified in the Supplementary Conditions. Except for such reliance on such "technical data," Contractor may not rely upon or make any claim against Owner or Engineer, or any of their officers, directors, members, partners, employees, agents, consultants, or subcontractors with respect to:

1. the completeness of such reports and drawings for Contractor's purposes, including, but not limited to, any aspects of the means, methods, techniques, sequences and procedures of construction to be employed by Contractor and safety precautions and programs incident thereto; or

2. other data, interpretations, opinions and information contained in such reports or shown or indicated in such drawings; or

3. any Contractor interpretation of or conclusion drawn from any "technical data" or any such other data, interpretations, opinions or information.

C. Contractor shall not be responsible for any Hazardous Environmental Condition uncovered or revealed at the Site which was not shown or indicated in Drawings or Specifications or identified in the Contract Documents to be within the scope of the Work. Contractor shall be responsible for a Hazardous Environmental Condition created with any materials brought to the Site by Contractor, Subcontractors, Suppliers, or anyone else for whom Contractor is responsible.

Copyright © 2007 National Society of Professional Engineers for EJCDC. All rights reserved.

D. If Contractor encounters a Hazardous Environmental Condition or if Contractor or anyone for whom Contractor is responsible creates a Hazardous Environmental Condition, Contractor shall immediately: (i) secure or otherwise isolate such condition; (ii) stop all Work in connection with such condition and in any area affected thereby (except in an emergency as required by Paragraph 6.16.A); and (iii) notify Owner and Engineer (and promptly thereafter confirm such notice in writing). Owner shall promptly consult with Engineer concerning the necessity for Owner to retain a qualified expert to evaluate such condition or take corrective action, if any. Promptly after consulting with Engineer, Owner shall take such actions as are necessary to permit Owner to timely obtain required permits and provide Contractor the written notice required by Paragraph 4.06.E.

E. Contractor shall not be required to resume Work in connection with such condition or in any affected area until after Owner has obtained any required permits related thereto and delivered written notice to Contractor: (i) specifying that such condition and any affected area is or has been rendered safe for the resumption of Work; or (ii) specifying any special conditions under which such Work may be resumed safely. If Owner and Contractor cannot agree as to entitlement to or on the amount or extent, if any, of any adjustment in Contract Price or Contract Times, or both, as a result of such Work stoppage or such special conditions under which Work is agreed to be resumed by Contractor, either party may make a Claim therefor as provided in Paragraph 10.05.

F. If after receipt of such written notice Contractor does not agree to resume such Work based on a reasonable belief it is unsafe, or does not agree to resume such Work under such special conditions, then Owner may order the portion of the Work that is in the area affected by such condition to be deleted from the Work. If Owner and Contractor cannot agree as to entitlement to or on the amount or extent, if any, of an adjustment in Contract Price or Contract Times as a result of deleting such portion of the Work, then either party may make a Claim therefor as provided in Paragraph 10.05. Owner may have such deleted portion of the Work performed by Owner's own forces or others in accordance with Article 7.

G. To the fullest extent permitted by Laws and Regulations, Owner shall indemnify and hold harmless Contractor, Subcontractors, and Engineer, and the officers, directors, members, partners, employees, agents, consultants, and subcontractors of each and any of them from and against all claims, costs, losses, and damages (including but not limited to all fees and charges of engineers, architects, attorneys, and other professionals and all court or arbitration or other dispute resolution costs) arising out of or relating to a Hazardous Environmental Condition, provided that such Hazardous Environmental Condition: (i) was not shown or indicated in the Drawings or Specifications or identified in the Contract Documents to be included within the scope of the Work, and (ii) was not created by Contractor or by anyone for whom Contractor is responsible. Nothing in this Paragraph 4.06.G shall obligate Owner to indemnify any individual or entity from and against the consequences of that individual's or entity's own negligence.

H. To the fullest extent permitted by Laws and Regulations, Contractor shall indemnify and hold harmless Owner and Engineer, and the officers, directors, members, partners, employees, agents, consultants, and subcontractors of each and any of them from and against all claims, costs, losses, and damages (including but not limited to all fees and charges of engineers, architects, attorneys, and other professionals and all court or arbitration or other dispute resolution costs) arising out of or relating to a Hazardous Environmental Condition created by

Copyright © 2007 National Society of Professional Engineers for EJCDC. All rights reserved.
Revisions highlighted within the text have been prepared by Woodard & Curran on behalf of and are as approved by Owner (LOWELL)

Contractor or by anyone for whom Contractor is responsible. Nothing in this Paragraph 4.06.H shall obligate Contractor to indemnify any individual or entity from and against the consequences of that individual's or entity's own negligence.

I. The provisions of Paragraphs 4.02, 4.03, and 4.04 do not apply to a Hazardous Environmental Condition uncovered or revealed at the Site.

ARTICLE 5 – BONDS AND INSURANCE

5.01 *Performance, Payment, and Other Bonds*

A. Contractor shall furnish performance and payment bonds, each in an amount at least equal to the Contract Price as security for the faithful performance and payment of all of Contractor's obligations under the Contract Documents. These bonds shall remain in effect until one year after the date when final payment becomes due or until completion of the correction period specified in Paragraph 13.07, whichever is later, except as provided otherwise by Laws or Regulations or by the Contract Documents. Contractor shall also furnish such other bonds as are required by the Contract Documents.

B. All bonds shall be in the form prescribed by the Contract Documents except as provided otherwise by Laws or Regulations, and shall be executed by such sureties as are named in the list of "Companies Holding Certificates of Authority as Acceptable Sureties on Federal Bonds and as Acceptable Reinsuring Companies" as published in Circular 570 (amended) by the Financial Management Service, Surety Bond Branch, U.S. Department of the Treasury. All bonds signed by an agent or attorney-in-fact must be accompanied by a certified copy of that individual's authority to bind the surety. The evidence of authority shall show that it is effective on the date the agent or attorney-in-fact signed each bond.

C. If the surety on any bond furnished by Contractor is declared bankrupt or becomes insolvent or its right to do business is terminated in any state where any part of the Project is located or it ceases to meet the requirements of Paragraph 5.01.B, Contractor shall promptly notify Owner and Engineer and shall, within ~~20~~ 5 days after the event giving rise to such notification, provide another bond and surety, both of which shall comply with the requirements of Paragraphs 5.01.B and 5.02.

5.02 *Licensed Sureties and Insurers*

A. All bonds and insurance required by the Contract Documents to be purchased and maintained by Owner or Contractor shall be obtained from surety or insurance companies that are duly licensed or authorized in the jurisdiction in which the Project is located to issue bonds or insurance policies for the limits and coverages so required. Such surety and insurance companies shall also meet such additional requirements and qualifications as may be provided in the Supplementary Conditions.

Copyright © 2007 National Society of Professional Engineers for EJCDC. All rights reserved.

5.03 *Certificates of Insurance*

A. Contractor shall deliver to Owner, with copies to each additional insured and loss payee identified in the Supplementary Conditions, certificates of insurance (and other evidence of insurance requested by Owner or any other additional insured) which Contractor is required to purchase and maintain.

B. Owner shall deliver to Contractor, with copies to each additional insured and loss payee identified in the Supplementary Conditions, certificates of insurance (and other evidence of insurance requested by Contractor or any other additional insured) which Owner is required to purchase and maintain.

C. Failure of Owner to demand such certificates or other evidence of Contractor's full compliance with these insurance requirements or failure of Owner to identify a deficiency in compliance from the evidence provided shall not be construed as a waiver of Contractor's obligation to maintain such insurance.

D. Owner does not represent that insurance coverage and limits established in this Contract necessarily will be adequate to protect Contractor.

E. The insurance and insurance limits required herein shall not be deemed as a limitation on Contractor's liability under the indemnities granted to Owner in the Contract Documents.

5.04 *Contractor's Insurance*

A. Contractor shall purchase and maintain such insurance as is appropriate for the Work being performed, complies with the requirements of Article 5, and as will provide protection from claims set forth below which may arise out of or result from Contractor's performance of the Work and Contractor's other obligations under the Contract Documents, whether it is to be performed by Contractor, any Subcontractor or Supplier, or by anyone directly or indirectly employed by any of them to perform any of the Work, or by anyone for whose acts any of them may be liable:

1. claims under workers' compensation, disability benefits, and other similar employee benefit acts;

2. claims for damages because of bodily injury, occupational sickness or disease, or death of Contractor's employees;

3. claims for damages because of bodily injury, sickness or disease, or death of any person other than Contractor's employees;

4. claims for damages insured by reasonably available personal injury liability coverage which are sustained:

   a. by any person as a result of an offense directly or indirectly related to the employment of such person by Contractor, or

   b. by any other person for any other reason;

Copyright © 2007 National Society of Professional Engineers for EJCDC. All rights reserved.

5. claims for damages, other than to the Work itself, because of injury to or destruction of tangible property wherever located, including loss of use resulting therefrom; ~~and~~

6. claims for damages because of bodily injury or death of any person or property damage arising out of the ownership, maintenance or use of any motor vehicle~~.~~;

7. claims for damages because of bodily injury or death of any person or for damage to property of arising out of operation of Laws or Regulations; and

8. claims for damages because of negligent acts, errors and omissions arising out of performing or providing professional services.

B. The policies of insurance required by this Paragraph 5.04 shall:

1. with respect to insurance required by Paragraphs 5.04.A.3 through 5.04.A.~~6~~7 inclusive, be written on an occurrence basis, include as additional insureds by endorsement (subject to any customary exclusion regarding professional liability) Owner and Engineer, and any other individuals or entities identified in the Supplementary Conditions, all of whom shall be ~~listed~~ included as additional insureds by endorsement, and include coverage for the respective officers, directors, members, partners, employees, agents, consultants, and subcontractors of each and any of all such additional insureds, and the insurance afforded to these additional insureds shall provide primary coverage for all claims covered thereby;

2. include at least the specific coverages and be written for not less than the limits of liability provided in the Supplementary Conditions or required by Laws or Regulations, whichever is greater;

3. include contractual liability insurance covering Contractor's indemnity obligations under Paragraphs 6.11 and 6.20;

4. contain a provision or endorsement that the coverage afforded will not be canceled, materially changed or renewal refused until at least 30 days prior written notice has been given to Owner and Contractor and to each other additional insured identified in the Supplementary Conditions to whom a certificate of insurance has been issued (and the certificates of insurance furnished by the Contractor pursuant to Paragraph 5.03 will so provide) and will contain waiver provisions in accordance with Paragraph 5.07;

5. remain in effect at least until final payment and at all times thereafter when Contractor may be correcting, removing, or replacing defective Work in accordance with Paragraph 13.07; and

6. include completed operations coverage:

a. Such insurance shall remain in effect for two years after final payment.

b. Contractor shall furnish Owner and each other additional insured identified in the Supplementary Conditions, to whom a certificate of insurance has been issued, evidence satisfactory to Owner and any such additional insured of continuation of such insurance at final payment and one year thereafter.

Copyright © 2007 National Society of Professional Engineers for EJCDC. All rights reserved.

7. In the event general liability insurance is provided on a claims-made policy, the retroactive date of such policy shall not be later than the date of the Notice to Proceed or the Effective Date of the Agreement, whichever is earlier. For construction periods extending beyond the expiration date of an initial claims-made policy, the retroactive date of all subsequent claims-made policies shall not be later than the date of the Notice to Proceed.

C. The limits of liability for the insurance required by Paragraph 5.04 of the General Conditions shall provide coverage for not less than the following amounts or greater where required by Laws and Regulations:

1. Workers' Compensation and related coverage:

Minimum limit of liability	Statutory
Applicable Federal (e.g., Longshoreman's)	Statutory
Employer's Liability	$1,000,000

2. Contractor's General Liability:

$3,000,000 per occurrence; $3,000,000 general aggregate, including:

- Broad Form Property Damage Liability including coverage for acts of terrorism
- Completed Operations and Product Liability
- Contractual Liability
- Pollution Liability
- Independent Contractors
- Explosion, Collapse & Underground Hazards
- Personal Injury Coverage, Exclusion "C" Deleted
- Fire Legal Liability
- Medical payments

Excess or Umbrella Liability: $3,000,000 per occurrence; $3,000,000 general aggregate

3. Automobile Liability under Paragraph 5.04.A.6 of the General Conditions:

Combined Single Limit of $3,000,000 for bodily injury & property damage covering Contractor and any vehicles owned, hired and non-owned by the Contractor

4. Professional Liability (E&O): $1,000,000 for each claim with an annual aggregate of at least $2,000,000

5. Owners Protective Liability (OCIP): as may be specified in the Supplementary Conditions

Any self-insured retention (not allowed for Worker's Compensation) and/or deductibles must be identified and cannot exceed $100,000 per occurrence without the prior approval of the Owner. Contractor must provide either an audited financial statement to confirm solvency or a letter of credit guaranteeing the $100,000 in case of loss for the duration of the Project and for the Correction Period.

Copyright © 2007 National Society of Professional Engineers for EJCDC. All rights reserved.

5.05 *Owner's Liability Insurance*

A. In addition to the insurance required to be provided by Contractor under Paragraph 5.04, Owner, at Owner's option, may purchase and maintain at Owner's expense Owner's own liability insurance as will protect Owner against claims which may arise from operations under the Contract Documents.

5.06 *Property Insurance*

A. ~~Unless otherwise provided in the Supplementary Conditions, Owner~~Contractor shall purchase and maintain property insurance upon the Work at the Site in the amount of the full replacement cost thereof. Contractor shall be responsible for any ~~(subject to such~~ deductible amounts or self-insured retention as may be provided in the Supplementary Conditions or required by Laws and Regulations~~)~~. This insurance shall:

1. include the interests of Owner, Contractor, Subcontractors, and Engineer, and any other individuals or entities identified in the Supplementary Conditions, and the officers, directors, members, partners, employees, agents, consultants, and subcontractors of each and any of them, each of whom is deemed to have an insurable interest and shall be listed as a loss payee;

2. be written on a Builder's Risk "all-risk" policy form that shall at least include insurance for physical loss or damage to the Work, temporary buildings, falsework, and materials and equipment in transit, and shall insure against at least the following perils or causes of loss: fire, lightning, flood, extended coverage, theft, vandalism and malicious mischief, earthquake, collapse, debris removal, demolition occasioned by enforcement of Laws and Regulations, water damage (other than that caused by flood), and such other perils or causes of loss as may be specifically required by the Supplementary Conditions.

3. include expenses incurred in the repair or replacement of any insured property (including but not limited to fees and charges of engineers and architects);

4. cover materials and equipment stored at the Site or at another location that was agreed to in writing by Owner prior to being incorporated in the Work, provided that such materials and equipment have been included in an Application for Payment recommended by Engineer;

5. allow for partial utilization of the Work by Owner;

6. include testing and startup; and

7. be maintained in effect until final payment is made unless otherwise agreed to in writing by Owner, Contractor, and Engineer with 30 days written notice to each other loss payee to whom a certificate of insurance has been issued.

B. (Not used)~~Owner shall purchase and maintain such equipment breakdown insurance or additional property insurance as may be required by the Supplementary Conditions or Laws and Regulations which will include the interests of Owner, Contractor, Subcontractors, and Engineer, and any other individuals or entities identified in the Supplementary Conditions, and the officers, directors, members, partners, employees, agents, consultants and subcontractors of~~

Copyright © 2007 National Society of Professional Engineers for EJCDC. All rights reserved.

~~each and any of them, each of whom is deemed to have an insurable interest and shall be listed as a loss payee.~~

C. All the policies of insurance (and the certificates or other evidence thereof) required to be purchased and maintained in accordance with this Paragraph 5.06 will contain a provision or endorsement that the coverage afforded will not be canceled or materially changed or renewal refused until at least 30 days prior written notice has been given to Owner and Contractor and to each other loss payee to whom a certificate of insurance has been issued and will contain waiver provisions in accordance with Paragraph 5.07.

D. Owner shall not be responsible for purchasing and maintaining any property insurance specified in this Paragraph 5.06 to protect the interests of Contractor, Subcontractors, or others in the Work. ~~to the extent of any deductible amounts that are identified in the Supplementary Conditions. The risk of loss within such identified deductible amount will be borne by Contractor, Subcontractors, or others suffering any such loss, and if any of them wishes property insurance coverage within the limits of such amounts, each may purchase and maintain it at the purchaser's own expense.~~

E. ~~If Contractor requests in writing that other special insurance be included in the property insurance policies provided under this Paragraph 5.06, Owner shall, if possible, include such insurance, and the cost thereof will be charged to Contractor by appropriate Change Order. Prior to commencement of the Work at the Site, Owner shall in writing advise Contractor whether or not such other insurance has been procured by Owner.~~

5.07 *Waiver of Rights*

A. Owner and Contractor intend that all policies purchased in accordance with Paragraph 5.06 will protect Owner, Contractor, Subcontractors, and Engineer, and all other individuals or entities identified in the Supplementary Conditions as loss payees (and the officers, directors, members, partners, employees, agents, consultants, and subcontractors of each and any of them) in such policies and will provide primary coverage for all losses and damages caused by the perils or causes of loss covered thereby. All such policies shall contain provisions to the effect that in the event of payment of any loss or damage the insurers will have no rights of recovery against any of the insureds or loss payees thereunder. Owner and Contractor waive all rights against each other and their respective officers, directors, members, partners, employees, agents, consultants and subcontractors of each and any of them for all losses and damages caused by, arising out of or resulting from any of the perils or causes of loss covered by such policies and any other property insurance applicable to the Work; and, in addition, waive all such rights against Subcontractors and Engineer, and all other individuals or entities identified in the Supplementary Conditions as loss payees (and the officers, directors, members, partners, employees, agents, consultants, and subcontractors of each and any of them) under such policies for losses and damages so caused. None of the above waivers shall extend to the rights that any party making such waiver may have to the proceeds of insurance held by Owner as trustee or otherwise payable under any policy so issued.

~~B. Owner waives all rights against Contractor, Subcontractors, and Engineer, and the officers, directors, members, partners, employees, agents, consultants and subcontractors of each and any of them for:~~

Copyright © 2007 National Society of Professional Engineers for EJCDC. All rights reserved.

1. ~~loss due to business interruption, loss of use, or other consequential loss extending beyond direct physical loss or damage to Owner's property or the Work caused by, arising out of, or resulting from fire or other perils whether or not insured by Owner; and~~

2. ~~loss or damage to the completed Project or part thereof caused by, arising out of, or resulting from fire or other insured peril or cause of loss covered by any property insurance maintained on the completed Project or part thereof by Owner during partial utilization pursuant to Paragraph 14.05, after Substantial Completion pursuant to Paragraph 14.04, or after final payment pursuant to Paragraph 14.07.~~

~~C.~~B. ~~Any insurance policy maintained by Owner covering any loss, damage or consequential loss referred to in Paragraph 5.07.B shall contain provisions to the effect that in the event of payment of any such loss, damage, or consequential loss, the insurers will have no rights of recovery against Contractor, Subcontractors, or Engineer, and the officers, directors, members, partners, employees, agents, consultants and subcontractors of each and any of them.~~

5.08 *Receipt and Application of Insurance Proceeds*

A. (Not used) ~~Any insured loss under the policies of insurance required by Paragraph 5.06 will be adjusted with Owner and made payable to Owner as fiduciary for the loss payees, as their interests may appear, subject to the requirements of any applicable mortgage clause and of Paragraph 5.08.B. Owner shall deposit in a separate account any money so received and shall distribute it in accordance with such agreement as the parties in interest may reach. If no other special agreement is reached, the damaged Work shall be repaired or replaced, the moneys so received applied on account thereof, and the Work and the cost thereof covered by an appropriate Change Order~~.

~~B. Owner as fiduciary shall have power to adjust and settle any loss with the insurers unless one of the parties in interest shall object in writing within 15 days after the occurrence of loss to Owner's exercise of this power. If such objection be made, Owner as fiduciary shall make settlement with the insurers in accordance with such agreement as the parties in interest may reach. If no such agreement among the parties in interest is reached, Owner as fiduciary shall adjust and settle the loss with the insurers and, if required in writing by any party in interest, Owner as fiduciary shall give bond for the proper performance of such duties.~~

5.09 *Acceptance of Bonds and Insurance; Option to Replace*

A. If ~~either~~ Owner ~~or Contractor~~ has any objection to the coverage afforded by or other provisions of the bonds or insurance required to be purchased and maintained by the ~~other party~~the Contractor in accordance with Article 5 on the basis of non-conformance with the Contract Documents, the ~~objecting party~~Owner shall so notify the ~~other party~~Contractor in writing within 10 days after receipt of the certificates (or other evidence requested) required by Paragraph 2.01.B. ~~Owner and~~ Contractor shall ~~each~~ provide to the ~~other~~ Owner, such additional information in respect of insurance provided as the other may reasonably request. If ~~either party~~Contractor does not purchase or maintain all of the bonds and insurance required ~~of such party~~ by the Contract Documents, ~~such party~~Contractor shall notify the ~~other party~~Owner in writing of such failure to purchase prior to the start of the Work, or of such failure to maintain prior to any change in the required coverage. Without prejudice to any other right or remedy,

Copyright © 2007 National Society of Professional Engineers for EJCDC. All rights reserved.

the ~~other party~~Owner may elect to obtain equivalent bonds or insurance to protect ~~such other party's~~Owner's interests at the expense of the ~~party~~ Contractor~~who was required to provide such coverage~~, and a Change Order shall be issued to adjust the Contract Price accordingly.

5.10 *Partial Utilization, Acknowledgment of Property Insurer*

A. If Owner finds it necessary to occupy or use a portion or portions of the Work prior to Substantial Completion of all the Work as provided in Paragraph 14.05, no such use or occupancy shall commence before the insurers providing the property insurance pursuant to Paragraph 5.06 have acknowledged notice thereof and in writing effected any changes in coverage necessitated thereby. The insurers providing the property insurance shall consent by endorsement on the policy or policies, but the property insurance shall not be canceled or permitted to lapse on account of any such partial use or occupancy.

ARTICLE 6 – CONTRACTOR'S RESPONSIBILITIES

6.01 *Supervision and Superintendence*

A. Contractor shall supervise, inspect, and direct the Work competently and efficiently, devoting such attention thereto and applying such skills and expertise as may be necessary to perform the Work in accordance with the Contract Documents. Contractor shall be solely responsible for the means, methods, techniques, sequences, and procedures of construction. Contractor shall not be responsible for the negligence of Owner or Engineer in the design or specification of a specific means, method, technique, sequence, or procedure of construction which is shown or indicated in and expressly required by the Contract Documents.

B. At all times during the progress of the Work, Contractor shall assign a competent resident superintendent who shall not be replaced without written notice to Owner and Engineer except under extraordinary circumstances.

6.02 *Labor; Working Hours*

A. Contractor shall provide competent, suitably qualified personnel to survey and lay out the Work and perform construction as required by the Contract Documents. Contractor shall at all times maintain good discipline and order at the Site.

1. Contractor shall comply with the Equal Employment Opportunity Requirements included in the Supplementary Conditions.

B. Except as otherwise required for the safety or protection of persons or the Work or property at the Site or adjacent thereto, and except as otherwise stated in the Contract Documents, all Work at the Site shall be performed during regular working hours. Contractor will not permit the performance of Work on a Saturday, Sunday, or any legal holiday without Owner's written consent (which will not be unreasonably withheld) given after prior written notice to Engineer.

Copyright © 2007 National Society of Professional Engineers for EJCDC. All rights reserved.

6.03 *Services, Materials, and Equipment*

A. Unless otherwise specified in the Contract Documents, Contractor shall provide and assume full responsibility for all services, materials, equipment, labor, transportation, construction equipment and machinery, tools, appliances, fuel, power, light, heat, telephone, water, sanitary facilities, temporary facilities, and all other facilities and incidentals necessary for the performance, testing, start-up, and completion of the Work.

B. All materials and equipment incorporated into the Work shall be as specified or, if not specified, shall be of good quality and new, except as otherwise provided in the Contract Documents. All special warranties and guarantees required by the Specifications shall expressly run to the benefit of Owner. If required by Engineer, Contractor shall furnish satisfactory evidence (including reports of required tests) as to the source, kind, and quality of materials and equipment.

C. All materials and equipment shall be stored, applied, installed, connected, erected, protected, used, cleaned, and conditioned in accordance with instructions of the applicable Supplier, except as otherwise may be provided in the Contract Documents.

D. Provision of any instructions:

1. will not be effective to assign to Owner, or any of Owner's consultants, agents or employees, any duty or authority to supervise or direct the furnishing or performance of the Work or any duty or authority to undertake responsibility contrary to the provisions of Paragraph 8.09; and

2. will not be effective to assign to Engineer, or any of Engineer's consultants, agents or employees, any duty or authority to supervise or direct the furnishing or performance of the Work or any duty or authority to undertake responsibility contrary to the provisions of Paragraph 9.09.

6.04 *Progress Schedule*

A. Contractor shall adhere to the Progress Schedule established in accordance with Paragraph 2.07 as it may be adjusted from time to time as provided below.

1. Contractor shall submit to Engineer for acceptance (to the extent indicated in Paragraph 2.07) proposed adjustments in the Progress Schedule that will not result in changing the Contract Times. Such adjustments will comply with any provisions of the General Requirements applicable thereto.

2. Proposed adjustments in the Progress Schedule that will change the Contract Times shall be submitted in accordance with the requirements of Article 12. Adjustments in Contract Times may only be made by a Change Order.

Copyright © 2007 National Society of Professional Engineers for EJCDC. All rights reserved.
Revisions highlighted within the text have been prepared by Woodard & Curran on behalf of and are as approved by Owner (LOWELL)

6.05 *Substitutes and "Or-Equals"*

A. Whenever an item of material or equipment is specified or described in the Contract Documents by using the name of a proprietary item, make or catalogue number, or the name of a particular Supplier, the specification or description is intended to establish the type, function, appearance, and quality required. Unless the specification or description contains or is followed by words reading that no like, equivalent, or "or-equal" item or no substitution is permitted, other items of material or equipment or material or equipment of other Suppliers may be submitted to Engineer for review under the circumstances described below.

1. *"Or-Equal" Items:* If in Engineer's sole discretion an item of material or equipment proposed by Contractor is functionally equal to that named and sufficiently similar so that no change in related Work will be required, it may be considered by Engineer as an "or-equal" item, in which case review and approval of the proposed item may, in Engineer's sole discretion, be accomplished without compliance with some or all of the requirements for approval of proposed substitute items. For the purposes of this Paragraph 6.05.A.1, a proposed item of material or equipment will be considered functionally equal to an item so named if:

   a. in the exercise of reasonable judgment Engineer determines that:

      1) it is at least equal in materials of construction, quality, durability, appearance, strength, and design characteristics;

      2) it will reliably perform at least equally well the function and achieve the results imposed by the design concept of the completed Project as a functioning whole; and

      3) it has a proven record of performance and availability of responsive service.

   b. Contractor certifies that, if approved and incorporated into the Work:

      1) there will be no increase in cost to the Owner or increase in Contract Times; and

      2) it will conform substantially to the detailed requirements of the item named in the Contract Documents.

2. Substitute Items:

   a. If in Engineer's sole discretion an item of material or equipment proposed by Contractor does not qualify as an "or-equal" item under Paragraph 6.05.A.1, it will be considered a proposed substitute item.

   b. Contractor shall submit sufficient information as provided below to allow Engineer to determine if the item of material or equipment proposed is essentially equivalent to that named and an acceptable substitute therefor. Requests for review of proposed substitute items of material or equipment will not be accepted by Engineer from anyone other than Contractor.

Copyright © 2007 National Society of Professional Engineers for EJCDC. All rights reserved.
Revisions highlighted within the text have been prepared by Woodard & Curran on behalf of and are as approved by Owner (LOWELL)

c. The requirements for review by Engineer will be as set forth in Paragraph 6.05.A.2.d, as supplemented by the General Requirements, and as Engineer may decide is appropriate under the circumstances.

d. Contractor shall make written application to Engineer for review of a proposed substitute item of material or equipment that Contractor seeks to furnish or use. The application:

1) shall certify that the proposed substitute item will:

a) perform adequately the functions and achieve the results called for by the general design,

b) be similar in substance to that specified, and

c) be suited to the same use as that specified;

2) will state:

a) the extent, if any, to which the use of the proposed substitute item will prejudice Contractor's achievement of Substantial Completion on time,

b) whether use of the proposed substitute item in the Work will require a change in any of the Contract Documents (or in the provisions of any other direct contract with Owner for other work on the Project) to adapt the design to the proposed substitute item, and

c) whether incorporation or use of the proposed substitute item in connection with the Work is subject to payment of any license fee or royalty;

3) will identify:

a) all variations of the proposed substitute item from that specified, and

b) available engineering, sales, maintenance, repair, and replacement services; and

4) shall contain an itemized estimate of all costs or credits that will result directly or indirectly from use of such substitute item, including costs of redesign and claims of other contractors affected by any resulting change.

B. *Substitute Construction Methods or Procedures:* If a specific means, method, technique, sequence, or procedure of construction is expressly required by the Contract Documents, Contractor may furnish or utilize a substitute means, method, technique, sequence, or procedure of construction approved by Engineer. Contractor shall submit sufficient information to allow Engineer, in Engineer's sole discretion, to determine that the substitute proposed is equivalent to that expressly called for by the Contract Documents. The requirements for review by Engineer will be similar to those provided in Paragraph 6.05.A.2.

Copyright © 2007 National Society of Professional Engineers for EJCDC. All rights reserved.

C. *Engineer's Evaluation:* Engineer will be allowed a reasonable time within which to evaluate each proposal or submittal made pursuant to Paragraphs 6.05.A and 6.05.B. Engineer may require Contractor to furnish additional data about the proposed substitute item. Engineer will be the sole judge of acceptability. No "or equal" or substitute will be ordered, installed or utilized until Engineer's review is complete, which will be evidenced by a Change Order in the case of a substitute and an approved Shop Drawing for an "or equal." Engineer will advise Contractor in writing of any negative determination.

D. *Special Guarantee:* Owner may require Contractor to furnish at Contractor's expense a special performance guarantee or other surety with respect to any substitute.

E. *Engineer's Cost Reimbursement*: Engineer will record Engineer's costs in evaluating a substitute proposed or submitted by Contractor pursuant to Paragraphs 6.05.A.2 and 6.05.B. Whether or not Engineer approves a substitute so proposed or submitted by Contractor, Contractor shall reimburse Owner for the reasonable charges of Engineer for evaluating each such proposed substitute. Contractor shall also reimburse Owner for the reasonable charges of Engineer for making changes in the Contract Documents (or in the provisions of any other direct contract with Owner) resulting from the acceptance of each proposed substitute.

F. *Contractor's Expense*: Contractor shall provide all data in support of any proposed substitute or "or-equal" at Contractor's expense.

6.06 *Concerning Subcontractors, Suppliers, and Others*

A. Contractor shall not employ any Subcontractor, Supplier, or other individual or entity (including those acceptable to Owner as indicated in Paragraph 6.06.B), whether initially or as a replacement, against whom Owner may have reasonable objection. Contractor shall not be required to employ any Subcontractor, Supplier, or other individual or entity to furnish or perform any of the Work against whom Contractor has reasonable objection.

B. If the Bidding Requirements or Supplementary Conditions require the identity of certain Subcontractors, Suppliers, or other individuals or entities to be submitted to Owner in advance for acceptance by Owner by a specified date prior to the Effective Date of the Agreement, and ~~if~~ the Contractor has submitted a list thereof in accordance with the Bidding Requirements or Supplementary Conditions (which shall be included as an attachment to the Agreement), Owner's acceptance (either in writing or by failing to make written objection thereto by the date indicated for acceptance or objection in the Bidding Documents or the Contract Documents) of any such Subcontractor, Supplier, or other individual or entity so identified may be revoked on the basis of reasonable objection after due investigation. Contractor shall submit an acceptable replacement for the rejected Subcontractor, Supplier, or other individual or entity, and the Contract Price will be adjusted by the difference in the cost occasioned by such replacement, and an appropriate Change Order will be issued. No acceptance by Owner of any such Subcontractor, Supplier, or other individual or entity, whether initially or as a replacement, shall constitute a waiver of any right of Owner or Engineer to reject defective Work.

Copyright © 2007 National Society of Professional Engineers for EJCDC. All rights reserved.
Revisions highlighted within the text have been prepared by Woodard & Curran on behalf of and are as approved by Owner (LOWELL)

C. Contractor shall be fully responsible to Owner and Engineer for all acts and omissions of the Subcontractors, Suppliers, and other individuals or entities performing or furnishing any of the Work just as Contractor is responsible for Contractor's own acts and omissions. Nothing in the Contract Documents:

1. shall create for the benefit of any such Subcontractor, Supplier, or other individual or entity any contractual relationship between Owner or Engineer and any such Subcontractor, Supplier or other individual or entity; nor

2. shall create any obligation on the part of Owner or Engineer to pay or to see to the payment of any moneys due any such Subcontractor, Supplier, or other individual or entity except as may otherwise be required by Laws and Regulations.

D. Contractor shall be solely responsible for scheduling and coordinating the Work of Subcontractors, Suppliers, and other individuals or entities performing or furnishing any of the Work under a direct or indirect contract with Contractor.

E. Contractor shall require all Subcontractors, Suppliers, and such other individuals or entities performing or furnishing any of the Work to communicate with Engineer through Contractor.

F. The divisions and sections of the Specifications and the identifications of any Drawings shall not control Contractor in dividing the Work among Subcontractors or Suppliers or delineating the Work to be performed by any specific trade.

G. All Work performed for Contractor by a Subcontractor or Supplier will be pursuant to an appropriate agreement between Contractor and the Subcontractor or Supplier which specifically binds the Subcontractor or Supplier to the applicable terms and conditions of the Contract Documents for the benefit of Owner and Engineer.

1. Whenever any such agreement is with a Subcontractor or Supplier who is listed as a loss payee on the property insurance provided in Paragraph 5.06, the agreement between the Contractor and the Subcontractor or Supplier will contain provisions whereby the Subcontractor or Supplier waives all rights against Owner, Contractor, Engineer, and all other individuals or entities identified in the Supplementary Conditions to be listed as insureds or loss payees (and the officers, directors, members, partners, employees, agents, consultants, and subcontractors of each and any of them) for all losses and damages caused by, arising out of, relating to, or resulting from any of the perils or causes of loss covered by such policies and any other property insurance applicable to the Work. If the insurers on any such policies require separate waiver forms to be signed by any Subcontractor or Supplier, Contractor will obtain the same.

2. Such agreement between Contractor and the Subcontractor or Supplier shall specifically include arbitration provisions similar to those in Article 16 and provisions required by Laws and Regulations identified in the various Supplementary Conditions.

Copyright © 2007 National Society of Professional Engineers for EJCDC. All rights reserved.

6.07 *Patent Fees and Royalties*

A. Contractor shall pay all license fees and royalties and assume all costs incident to the use in the performance of the Work or the incorporation in the Work of any invention, design, process, product, or device which is the subject of patent rights or copyrights held by others. If a particular invention, design, process, product, or device is specified in the Contract Documents for use in the performance of the Work and if, to the actual knowledge of Owner or Engineer, its use is subject to patent rights or copyrights calling for the payment of any license fee or royalty to others, the existence of such rights shall be disclosed by Owner in the Contract Documents.

B. To the fullest extent permitted by Laws and Regulations, Owner shall indemnify and hold harmless Contractor, and its officers, directors, members, partners, employees, agents, consultants, and subcontractors from and against all claims, costs, losses, and damages (including but not limited to all fees and charges of engineers, architects, attorneys, and other professionals, and all court or arbitration or other dispute resolution costs) arising out of or relating to any infringement of patent rights or copyrights incident to the use in the performance of the Work or resulting from the incorporation in the Work of any invention, design, process, product, or device specified in the Contract Documents, but not identified as being subject to payment of any license fee or royalty to others required by patent rights or copyrights.

C. To the fullest extent permitted by Laws and Regulations, Contractor shall indemnify and hold harmless Owner and Engineer, and the officers, directors, members, partners, employees, agents, consultants and subcontractors of each and any of them from and against all claims, costs, losses, and damages (including but not limited to all fees and charges of engineers, architects, attorneys, and other professionals and all court or arbitration or other dispute resolution costs) arising out of or relating to any infringement of patent rights or copyrights incident to the use in the performance of the Work or resulting from the incorporation in the Work of any invention, design, process, product, or device not specified in the Contract Documents.

D. At the Owner's option, Contractor shall defend claims in connection with any alleged infringement of such rights.

6.08 *Permits*

A. Unless otherwise provided in the Supplementary Conditions, Contractor shall obtain and pay for all construction permits and licenses. Owner shall assist Contractor, when necessary, in obtaining such permits and licenses. Contractor shall pay all governmental charges and inspection fees necessary for the prosecution of the Work which are applicable at the time of opening of Bids, or, if there are no Bids, on the Effective Date of the Agreement. Owner shall pay all charges of utility owners for connections for providing permanent service to the Work.

1. Owner will provide the permits and licenses indicated in the Supplementary Conditions, if any.

Copyright © 2007 National Society of Professional Engineers for EJCDC. All rights reserved.

6.09 *Laws and Regulations*

A. Contractor shall give all notices required by and shall comply with all Laws and Regulations applicable to the performance of the Work. See Supplementary Conditions for specific requirements, if any. Except where otherwise expressly required by applicable Laws and Regulations, neither Owner nor Engineer shall be responsible for monitoring Contractor's compliance with any Laws or Regulations.

B. If Contractor observes that the Specifications or Drawings are at variance with any Laws or Regulations, Contractor shall give Engineer prompt written notice thereof, and any necessary changes will be authorized by one of the methods set forth in Paragraph 3.04. If Contractor performs any Work knowing or having reason to know that it is contrary to Laws or Regulations, Contractor shall bear all claims, costs, losses, and damages (including but not limited to all fees and charges of engineers, architects, attorneys, and other professionals and all court or arbitration or other dispute resolution costs) arising out of or relating to such Work. However, it shall not be Contractor's responsibility to make certain that the Specifications and Drawings are in accordance with Laws and Regulations, but this shall not relieve Contractor of Contractor's obligations under Paragraph 3.03.

C. Changes in Laws or Regulations not known at the time of opening of Bids (or, on the Effective Date of the Agreement if there were no Bids) having an effect on the cost or time of performance of the Work shall be the subject of an adjustment in Contract Price or Contract Times. If Owner and Contractor are unable to agree on entitlement to or on the amount or extent, if any, of any such adjustment, a Claim may be made therefor as provided in Paragraph 10.05.

6.10 *Taxes*

A. Contractor shall pay all sales, consumer, use, and other similar taxes required to be paid by Contractor in accordance with the Laws and Regulations of the place of the Project which are applicable during the performance of the Work.

B. If Owner is sales tax exempt, specific provisions shall be as set forth in the Supplementary Conditions.

6.11 *Use of Site and Other Areas*

A. Limitation on Use of Site and Other Areas:

1. Contractor shall confine construction equipment, the storage of materials and equipment, and the operations of workers to the Site and other areas permitted by Laws and Regulations, and shall not unreasonably encumber the Site and other areas with construction equipment or other materials or equipment. Contractor shall assume full responsibility for any damage to any such land or area, or to the owner or occupant thereof, or of any adjacent land or areas resulting from the performance of the Work.

Copyright © 2007 National Society of Professional Engineers for EJCDC. All rights reserved.

2. Should any claim be made by any such owner or occupant because of the performance of the Work, Contractor shall promptly settle with such other party by ~~negotiation~~ agreement or otherwise resolve the claim by arbitration or other dispute resolution proceeding or at law.

3. To the fullest extent permitted by Laws and Regulations, Contractor shall indemnify and hold harmless Owner and Engineer, and the officers, directors, members, partners, employees, agents, consultants and subcontractors of each and any of them from and against all claims, costs, losses, and damages (including but not limited to all fees and charges of engineers, architects, attorneys, and other professionals and all court or arbitration or other dispute resolution costs) arising out of or relating to any claim or action, legal or equitable, brought by any such owner or occupant against Owner, Engineer, or any other party indemnified hereunder to the extent caused by or based upon Contractor's performance of the Work.

B. *Removal of Debris During Performance of the Work:* During the progress of the Work Contractor shall keep the Site and other areas free from accumulations of waste materials, rubbish, and other debris. Removal and disposal of such waste materials, rubbish, and other debris shall conform to applicable Laws and Regulations.

C. *Cleaning:* Prior to Substantial Completion of the Work Contractor shall clean the Site and the Work and make it ready for utilization by Owner. At the completion of the Work, Contractor shall remove from the Site all tools, appliances, construction equipment and machinery, and surplus materials and shall restore to original condition all property not designated for alteration by the Contract Documents.

D. *Loading Structures:* Contractor shall not load nor permit any part of any structure to be loaded in any manner that will endanger the structure, nor shall Contractor subject any part of the Work or adjacent property to stresses or pressures that will endanger it.

6.12 *Record Documents*

A. Contractor shall maintain in a safe place at the Site one record copy of all Drawings, Specifications, Addenda, Change Orders, Work Change Directives, Field Orders, and written interpretations and clarifications in good order and annotated to show changes made during construction. These record documents together with all approved Samples and a counterpart of all approved Shop Drawings will be available to Engineer for reference. Upon completion of the Work, these record documents, Samples, and Shop Drawings and other closeout submittals will be delivered to Engineer for Owner.

6.13 *Safety and Protection*

A. Contractor shall be solely responsible for initiating, maintaining and supervising all safety precautions and programs in connection with the Work. Such responsibility does not relieve Subcontractors of their responsibility for the safety of persons or property in the performance of their work, nor for compliance with applicable safety Laws and Regulations. Contractor shall take all necessary precautions for the safety of, and shall provide the necessary protection to prevent damage, injury or loss to:

Copyright © 2007 National Society of Professional Engineers for EJCDC. All rights reserved.
Revisions highlighted within the text have been prepared by Woodard & Curran on behalf of and are as approved by Owner (LOWELL)

1. all persons on the Site or who may be affected by the Work;

2. all the Work and materials and equipment to be incorporated therein, whether in storage on or off the Site; and

3. other property at the Site or adjacent thereto, including trees, shrubs, lawns, walks, pavements, roadways, structures, utilities, and Underground Facilities not designated for removal, relocation, or replacement in the course of construction.

B. Contractor shall comply with all applicable Laws and Regulations relating to the safety of persons or property, or to the protection of persons or property from damage, injury, or loss; and shall erect and maintain all necessary safeguards for such safety and protection. Contractor shall notify owners of adjacent property and of Underground Facilities and other utility owners when prosecution of the Work may affect them, and shall cooperate with them in the protection, removal, relocation, and replacement of their property.

C. Contractor shall comply with the applicable requirements of Owner's safety programs and safety requirements included in the Supplementary Conditions, if any. ~~The Supplementary Conditions identify any Owner's safety programs that are applicable to the Work.~~

D. Contractor shall inform Owner and Engineer of the specific requirements of Contractor's safety program with which Owner's and Engineer's employees and representatives must comply while at the Site.

E. All damage, injury, or loss to any property referred to in Paragraph 6.13.A.2 or 6.13.A.3 caused, directly or indirectly, in whole or in part, by Contractor, any Subcontractor, Supplier, or any other individual or entity directly or indirectly employed by any of them to perform any of the Work, or anyone for whose acts any of them may be liable, shall be remedied by Contractor (except damage or loss attributable to the fault of Drawings or Specifications or to the acts or omissions of Owner or Engineer or anyone employed by any of them, or anyone for whose acts any of them may be liable, and not attributable, directly or indirectly, in whole or in part, to the fault or negligence of Contractor or any Subcontractor, Supplier, or other individual or entity directly or indirectly employed by any of them).

F. Contractor's duties and responsibilities for safety and for protection of the Work shall continue until such time as all the Work is completed and Engineer has issued a notice to Owner and Contractor in accordance with Paragraph 14.07.B that the Work is acceptable (except as otherwise expressly provided in connection with Substantial Completion).

6.14 *Safety Representative*

A. Contractor shall designate a qualified and experienced safety representative at the Site whose duties and responsibilities shall be the prevention of accidents and the maintaining and supervising of safety precautions and programs.

Copyright © 2007 National Society of Professional Engineers for EJCDC. All rights reserved.

6.15 *Hazard Communication Programs*

A. Contractor shall be responsible for coordinating any exchange of material safety data sheets or other hazard communication information required to be made available to or exchanged between or among employers at the Site in accordance with Laws or Regulations.

6.16 *Emergencies*

A. In emergencies affecting the safety or protection of persons or the Work or property at the Site or adjacent thereto, Contractor is obligated to act to prevent threatened damage, injury, or loss. Contractor shall give Engineer prompt written notice if Contractor believes that any significant changes in the Work or variations from the Contract Documents have been caused thereby or are required as a result thereof. If Engineer determines that a change in the Contract Documents is required because of the action taken by Contractor in response to such an emergency, a Work Change Directive or Change Order will be issued.

6.17 *Shop Drawings and Samples*

A. Contractor shall submit Shop Drawings and Samples to Engineer for review and approval in accordance with the accepted Schedule of Submittals (as required by Paragraph 2.07). Each submittal will be identified as Engineer may require.

1. Shop Drawings:

a. Submit number of copies specified in the General Requirements.

b. Data shown on the Shop Drawings will be complete with respect to quantities, dimensions, specified performance and design criteria, materials, and similar data to show Engineer the services, materials, and equipment Contractor proposes to provide and to enable Engineer to review the information for the limited purposes required by Paragraph 6.17.D.

2. Samples:

a. Submit number of Samples specified in the Specifications.

b. Clearly identify each Sample as to material, Supplier, pertinent data such as catalog numbers, the use for which intended and other data as Engineer may require to enable Engineer to review the submittal for the limited purposes required by Paragraph 6.17.D.

B. Where a Shop Drawing or Sample is required by the Contract Documents or the Schedule of Submittals, any related Work performed prior to Engineer's review and approval of the pertinent submittal will be at the sole expense and responsibility of Contractor.

Copyright © 2007 National Society of Professional Engineers for EJCDC. All rights reserved.
Revisions highlighted within the text have been prepared by Woodard & Curran on behalf of and are as approved by Owner (LOWELL)

C. Submittal Procedures:

1. Before submitting each Shop Drawing or Sample, Contractor shall have:

   a. reviewed and coordinated each Shop Drawing or Sample with other Shop Drawings and Samples and with the requirements of the Work and the Contract Documents;

   b. determined and verified all field measurements, quantities, dimensions, specified performance and design criteria, installation requirements, materials, catalog numbers, and similar information with respect thereto;

   c. determined and verified the suitability of all materials offered with respect to the indicated application, fabrication, shipping, handling, storage, assembly, and installation pertaining to the performance of the Work; and

   d. determined and verified all information relative to Contractor's responsibilities for means, methods, techniques, sequences, and procedures of construction, and safety precautions and programs incident thereto.

2. Each submittal shall bear a stamp or specific written certification that Contractor has satisfied Contractor's obligations under the Contract Documents with respect to Contractor's review and approval of that submittal.

3. With each submittal, Contractor shall give Engineer specific written notice of any variations that the Shop Drawing or Sample may have from the requirements of the Contract Documents. This notice shall be both a written communication separate from the Shop Drawings or Sample submittal; and, in addition, by a specific notation made on each Shop Drawing or Sample submitted to Engineer for review and approval of each such variation.

D. Engineer's Review:

1. Engineer will provide timely review of Shop Drawings and Samples in accordance with the Schedule of Submittals acceptable to Engineer. Engineer's review and approval will be only to determine if the items covered by the submittals will, after installation or incorporation in the Work, conform to the information given in the Contract Documents and be compatible with the design concept of the completed Project as a functioning whole as indicated by the Contract Documents.

2. Engineer's review and approval will not extend to means, methods, techniques, sequences, or procedures of construction (except where a particular means, method, technique, sequence, or procedure of construction is specifically and expressly called for by the Contract Documents) or to safety precautions or programs incident thereto. The review and approval of a separate item as such will not indicate approval of the assembly in which the item functions.

Copyright © 2007 National Society of Professional Engineers for EJCDC. All rights reserved.

3. Engineer's review and approval shall not relieve Contractor from responsibility for any variation from the requirements of the Contract Documents unless Contractor has complied with the requirements of Paragraph 6.17.C.3 and Engineer has given written approval of each such variation by specific written notation thereof incorporated in or accompanying the Shop Drawing or Sample. Engineer's review and approval shall not relieve Contractor from responsibility for complying with the requirements of Paragraph 6.17.C.1. or for errors or omissions in a Shop Drawing or Sample.

E. Resubmittal Procedures:

1. Contractor shall make corrections required by Engineer and shall return the required number of corrected copies of Shop Drawings and submit, as required, new Samples for review and approval. Contractor shall direct specific attention in writing to revisions other than the corrections called for by Engineer on previous submittals.

2. Contractor shall furnish required submittals with sufficient information and accuracy in order to obtain required approval of an item with no more than 3 submittals. Engineer will record Engineer's time for reviewing subsequent submittals of Shop Drawings, samples, or other items requiring approval and Contractor shall reimburse Owner for Engineer's charges for such time.

3. In the event that Contractor requests a change of a previously approved item, Contractor shall reimburse Owner for Engineer's charges for its review time unless the need for such change is beyond the control of Contractor.

6.18 *Continuing the Work*

A. Contractor shall carry on the Work and adhere to the Progress Schedule during all disputes or disagreements with Owner. No Work shall be delayed or postponed pending resolution of any disputes or disagreements, except as permitted by Paragraph 15.04 or as Owner and Contractor may otherwise agree in writing.

6.19 *Contractor's General Warranty and Guarantee*

A. Contractor warrants and guarantees to Owner that all Work will be in accordance with the Contract Documents and in accordance with Subcontractor warranties, manufacturers and Suppliers warranties on equipment and material, and extended or special warranties and will not be defective for the correction period specified in 13.07. Owner and Engineer and ~~its~~ their officers, directors, members, partners, employees, agents, consultants, and subcontractors shall be entitled to rely on representation of Contractor's warranty and guarantee.

1. Contractor shall obtain and preserve for the benefit of the Owner:

a. manufacturers' and Suppliers' written warranties and guarantees on equipment and material incorporated into the Work;

Copyright © 2007 National Society of Professional Engineers for EJCDC. All rights reserved.
Revisions highlighted within the text have been prepared by Woodard & Curran on behalf of and are as approved by Owner (LOWELL)

b. written warranties and guarantees from each Subcontractor engaged in the performance of the Work; and

2. extended or special warranties.

B. Contractor's warranty and guarantee hereunder excludes defects or damage caused by:

1. abuse, modification, or improper maintenance or operation by persons other than Contractor, Subcontractors, Suppliers, or any other individual or entity for whom Contractor is responsible; or

2. normal wear and tear under normal usage.

C. Contractor's obligation to perform and complete the Work in accordance with the Contract Documents shall be absolute. None of the following will constitute an acceptance of Work that is not in accordance with the Contract Documents or a release of Contractor's obligation to perform the Work in accordance with the Contract Documents:

1. observations by Engineer;

2. recommendation by Engineer or payment by Owner of any progress or final payment;

3. the issuance of a certificate of Substantial Completion by Engineer or any payment related thereto by Owner;

4. use or occupancy of the Work or any part thereof by Owner;

5. any review and approval of a Shop Drawing or Sample submittal or the issuance of a notice of acceptability by Engineer;

6. any inspection, test, or approval by others; ~~or~~

7. any correction of defective Work by Owner; or.

8. any acceptance by Owner or any failure to do so.

D. Contractor shall prepare and execute a written general warranty and guarantee applicable to the Work reflecting the provisions of this Paragraph 6.19, Article 13 and other applicable provisions of the Contract Documents pertaining to warranties and guarantees, Subcontractor, manufacturers and Supplier warranties and guarantees, and extended or special warranties and guarantees. Contractor shall submit this written general warranty and guarantee in accordance with Article 14 and the General Requirements.

E. Provision of any warranties or guarantees:

1. will not be effective to assign to Owner, or any of Owner's consultants, agents or employees, any duty or authority to supervise or direct the furnishing or performance of the Work or any duty or authority to undertake responsibility contrary to the provisions of Paragraph 8.09; and

Copyright © 2007 National Society of Professional Engineers for EJCDC. All rights reserved.

2. will not be effective to assign to Engineer, or any of Engineer's consultants, agents or employees, any duty or authority to supervise or direct the furnishing or performance of the Work or any duty or authority to undertake responsibility contrary to the provisions of Paragraph 9.09.

F. The warranty and guarantee provisions of this Paragraph 6.19 shall be in addition to and not in limitation of any other warranties, guarantees or remedies allowed by Law or the Contract Documents.

6.20 *Indemnification*

A. To the fullest extent permitted by Laws and Regulations, Contractor shall indemnify, defend (with counsel designated by the insurer accepting liability for the Claim or damage or, in lieu thereof, counsel acceptable to the Owner), and hold harmless Owner and Engineer, and the officers, directors, members, partners, employees, agents, consultants and subcontractors of each and any of them from and against all claims, costs, losses, and damages (including but not limited to all fees and charges of engineers, architects, attorneys, and other professionals and all court or arbitration or other dispute resolution costs) arising out of or relating to the performance of the Work, provided that any such claim, cost, loss, or damage is attributable to bodily injury, sickness, disease, or death, or to injury to or destruction of tangible property (other than the Work itself), including the loss of use resulting therefrom but only to the extent caused by any negligent act or omission of Contractor, any Subcontractor, any Supplier, or any individual or entity directly or indirectly employed by any of them to perform any of the Work or anyone for whose acts any of them may be liable .

B. In any and all claims against Owner or Engineer or any of their officers, directors, members, partners, employees, agents, consultants, or subcontractors by any employee (or the survivor or personal representative of such employee) of Contractor, any Subcontractor, any Supplier, or any individual or entity directly or indirectly employed by any of them to perform any of the Work, or anyone for whose acts any of them may be liable, the indemnification obligation under Paragraph 6.20.A shall not be limited in any way by any limitation on the amount or type of damages, compensation, or benefits payable by or for Contractor or any such Subcontractor, Supplier, or other individual or entity under workers' compensation acts, disability benefit acts, or other employee benefit acts.

1. Without limiting the generality of the preceding Paragraph, the Contractor hereby specifically agrees to indemnify, defend, and hold harmless the Owner and Engineer from all such claims, losses or expenses which arise out of injuries of employees of the Contractor or any of its Subcontractors or Suppliers of any tier related to performance of the Work. It is the Owner intention that all financial risk of injuries related to the Work be borne by the Contractor, and that the Owner have no financial responsibility, direct or indirect, for any such claims.

C. The indemnification obligations of Contractor under Paragraph 6.20.A shall not extend to the liability of Engineer and Engineer's officers, directors, members, partners, employees, agents, consultants and subcontractors arising out of:

Copyright © 2007 National Society of Professional Engineers for EJCDC. All rights reserved.
Revisions highlighted within the text have been prepared by Woodard & Curran on behalf of and are as approved by Owner (LOWELL)

1. the preparation or approval of_~~, or the failure to prepare or approve~~ maps, Drawings, opinions, reports, surveys, Change Orders, designs, or Specifications, provided however, that if the claim, cost, loss or damage referred to in this Paragraph 6.20 results from failure of the Engineer to discover a condition, Underground Facilities or object which is underground or otherwise not reasonably observable by the Engineer, and if said failure to discover either was or should have been apparent to the Contractor in that the said condition or object is omitted from the Engineer's maps, Drawings, opinions, reports, surveys, Change Orders, designs or Specifications, then the Contractor shall be liable for indemnification of the Engineer and Owner under Paragraph 6.20 for claims, costs, losses and damages resulting from said failure to discover unless Contractor shall have notified Engineer of the existence and location of such condition or object prior to the occurrence of such claims, costs, losses and damages and in sufficient time for Engineer to have made provisions therefor.; or

2. giving directions or instructions, or failing to give them, if that is the primary cause of the injury or damage.; or

3. caused by the negligent acts, errors or omissions of any of them.

6.21 *Delegation of Professional Design Services*

A. Contractor will not be required to provide professional design services unless such services are specifically required by the Contract Documents for a portion of the Work or unless such services are required to carry out Contractor's responsibilities for construction means, methods, techniques, sequences and procedures. Contractor shall not be required to provide professional services in violation of applicable law.

B. If professional design services or certifications by a design professional related to systems, materials or equipment are specifically required of Contractor by the Contract Documents, Owner and Engineer will specify all performance and design criteria that such services must satisfy. Contractor shall cause such services or certifications to be provided by a properly licensed professional, whose signature and seal shall appear on all drawings, calculations, specifications, certifications, Shop Drawings and other submittals prepared by such professional. Shop Drawings and other submittals related to the Work designed or certified by such professional, if prepared by others, shall bear such professional's written approval when submitted to Engineer.

C. Owner and Engineer shall be entitled to rely upon the adequacy, accuracy and completeness of the services, certifications or approvals performed by such design professionals, provided Owner and Engineer have specified to Contractor all performance and design criteria that such services must satisfy.

D. Pursuant to this Paragraph 6.21, Engineer's review and approval of design calculations and design drawings will be only for the limited purpose of checking for conformance with performance and design criteria given and the design concept expressed in the Contract Documents. Engineer's review and approval of Shop Drawings and other submittals (except design calculations and design drawings) will be only for the purpose stated in Paragraph 6.17.D.1.

Copyright © 2007 National Society of Professional Engineers for EJCDC. All rights reserved.

E. Contractor shall not be responsible for the adequacy of the performance or design criteria required by the Contract Documents.

ARTICLE 7 – OTHER WORK AT THE SITE

7.01 *Related Work at Site*

A. Owner may perform other work related to the Project at the Site with Owner's employees, or through other direct contracts therefor, or have other work performed by utility owners. If such other work is not noted in the Contract Documents, then:

1. written notice thereof will be given to Contractor prior to starting any such other work; and

2. if Owner and Contractor are unable to agree on entitlement to or on the amount or extent, if any, of any adjustment in the Contract Price or Contract Times that should be allowed as a result of such other work, a Claim may be made therefor as provided in Paragraph 10.05.

B. Contractor shall afford each other contractor who is a party to such a direct contract, each utility owner, and Owner, if Owner is performing other work with Owner's employees, proper and safe access to the Site, provide a reasonable opportunity for the introduction and storage of materials and equipment and the execution of such other work, and properly coordinate the Work with theirs. Contractor shall do all cutting, fitting, and patching of the Work that may be required to properly connect or otherwise make its several parts come together and properly integrate with such other work. Contractor shall not endanger any work of others by cutting, excavating, or otherwise altering such work; provided, however, that Contractor may cut or alter others' work with the written consent of Engineer and the others whose work will be affected. The duties and responsibilities of Contractor under this Paragraph are for the benefit of such utility owners and other contractors to the extent that there are comparable provisions for the benefit of Contractor in said direct contracts between Owner and such utility owners and other contractors.

C. If the proper execution or results of any part of Contractor's Work depends upon work performed by others under this Article 7, Contractor shall inspect such other work and promptly report to Engineer in writing any delays, defects, or deficiencies in such other work that render it unavailable or unsuitable for the proper execution and results of Contractor's Work. Contractor's failure to so report will constitute an acceptance of such other work as fit and proper for integration with Contractor's Work except for latent defects and deficiencies in such other work.

7.02 *Coordination*

A. If Owner intends to contract with others for the performance of other work on the Project at the Site, the following will be set forth in Supplementary Conditions:

1. the individual or entity who will have authority and responsibility for coordination of the activities among the various contractors will be identified;

2. the specific matters to be covered by such authority and responsibility will be itemized; and

Copyright © 2007 National Society of Professional Engineers for EJCDC. All rights reserved.
Revisions highlighted within the text have been prepared by Woodard & Curran on behalf of and are as approved by Owner (LOWELL)

3. the extent of such authority and responsibilities will be provided.

B. Unless otherwise provided in the Supplementary Conditions, Owner shall have sole authority and responsibility for such coordination.

7.03 *Legal Relationships*

A. Paragraphs 7.01.A and 7.02 are not applicable for utilities not under the control of Owner.

B. Each other direct contract of Owner under Paragraph 7.01.A shall provide that the other contractor is liable to Owner and Contractor for the reasonable direct delay and disruption costs incurred by Contractor as a result of the other contractor's wrongful actions or inactions.

C. Contractor shall be liable to Owner and any other contractor under direct contract to Owner for the reasonable direct delay and disruption costs incurred by such other contractor as a result of Contractor's wrongful action or inactions.

ARTICLE 8 – OWNER'S RESPONSIBILITIES

8.01 *Communications to Contractor*

A. Except as otherwise provided in these General Conditions, Owner shall issue all communications to Contractor through Engineer.

8.02 *Replacement of Engineer*

A. In case of termination of the employment of Engineer, Owner shall appoint an engineer to whom Contractor makes no reasonable objection, whose status under the Contract Documents shall be that of the former Engineer.

8.03 *Furnish Data*

A. Owner shall promptly furnish the data required of Owner under the Contract Documents.

8.04 *Pay When Due*

A. Owner shall make payments to Contractor when they are due as provided in Paragraphs 14.02.C and 14.07.C.

8.05 *Lands and Easements; Reports and Tests*

A. Owner's duties with respect to providing lands and easements and providing engineering surveys to establish reference points are set forth in Paragraphs 4.01 and 4.05. Paragraph 4.02 refers to Owner's identifying and making available to Contractor copies of reports of explorations and tests of subsurface conditions and drawings of physical conditions relating to existing surface or subsurface structures at the Site.

Copyright © 2007 National Society of Professional Engineers for EJCDC. All rights reserved.

8.06 *Insurance*

A. Owner's responsibilities, if any, with respect to purchasing and maintaining liability and property insurance are set forth in Article 5.

8.07 *Change Orders*

A. Owner is obligated to execute Change Orders as indicated in Paragraph 10.03.

8.08 *Inspections, Tests, and Approvals*

A. Owner's responsibility with respect to certain inspections, tests, and approvals is set forth in Paragraph 13.03.B.

8.09 *Limitations on Owner's Responsibilities*

A. The Owner shall not supervise, direct, or have control or authority over, nor be responsible for, Contractor's means, methods, techniques, sequences, or procedures of construction, or the safety precautions and programs incident thereto, or for any failure of Contractor to comply with Laws and Regulations applicable to the performance of the Work. Owner will not be responsible for Contractor's failure to perform the Work in accordance with the Contract Documents.

8.10 *Undisclosed Hazardous Environmental Condition*

A. Owner's responsibility in respect to an undisclosed Hazardous Environmental Condition is set forth in Paragraph 4.06.

8.11 *Evidence of Financial Arrangements*

A. Upon request of Contractor, Owner shall furnish Contractor reasonable evidence that financial arrangements have been made to satisfy Owner's obligations under the Contract Documents.

8.12 *Compliance with Safety Program*

A. While at the Site, Owner's employees and representatives shall comply with the specific applicable requirements of Contractor's safety programs of which Owner has been informed pursuant to Paragraph 6.13.D.

ARTICLE 9 – ENGINEER'S STATUS DURING CONSTRUCTION

9.01 *Owner's Representative*

A. Engineer will be Owner's representative during the construction period. The duties and responsibilities and the limitations of authority of Engineer as Owner's representative during construction are set forth in the Contract Documents.

Copyright © 2007 National Society of Professional Engineers for EJCDC. All rights reserved.

9.02 *Visits to Site*

A. Engineer will make visits to the Site at intervals appropriate to the various stages of construction as Engineer deems necessary in order to observe as an experienced and qualified design professional the progress that has been made and the quality of the various aspects of Contractor's executed Work. Based on information obtained during such visits and observations, Engineer, for the benefit of Owner, will determine, in general, if the Work is proceeding in accordance with the Contract Documents. Engineer will not be required to make exhaustive or continuous inspections on the Site to check the quality or quantity of the Work. Engineer's efforts will be directed toward providing for Owner a greater degree of confidence that the completed Work will conform generally to the Contract Documents. On the basis of such visits and observations, Engineer will keep Owner informed of the progress of the Work and will endeavor to guard Owner against defective Work.

B. Engineer's visits and observations are subject to all the limitations on Engineer's authority and responsibility set forth in Paragraph 9.09. Particularly, but without limitation, during or as a result of Engineer's visits or observations of Contractor's Work, Engineer will not supervise, direct, control, or have authority over or be responsible for Contractor's means, methods, techniques, sequences, or procedures of construction, or the safety precautions and programs incident thereto, or for any failure of Contractor to comply with Laws and Regulations applicable to the performance of the Work.

9.03 *Project Representative*

A. If Owner and Engineer agree, Engineer will furnish a Resident Project Representative to assist Engineer in providing more extensive observation of the Work. The authority and responsibilities of any such Resident Project Representative and assistants will be as provided ~~in the Supplementary Conditions~~herein, and limitations on the responsibilities thereof will be as provided in Paragraph 9.09. If Owner designates another representative or agent to represent Owner at the Site who is not Engineer's consultant, agent or employee, the responsibilities and authority and limitations thereon of such other individual or entity will be as provided in the Supplementary Conditions.

B. The Resident Project Representative (RPR) will be Engineer's employee or agent at the Site, will act as directed by and under the supervision of Engineer, and will confer with Engineer regarding RPR's actions. RPR's dealings in matters pertaining to the Work in general shall be with Engineer and Contractor. RPR's dealings with Subcontractors shall be through or with the full knowledge and approval of Contractor. The RPR shall:

1. *Schedules:* Review the progress schedule, schedule of Shop Drawing and Sample submittals, and schedule of values prepared by Contractor and consult with Engineer concerning acceptability.

2. *Conferences and Meetings:* Attend meetings with Contractor, such as preconstruction conferences, progress meetings, job conferences and other project-related meetings, and prepare and circulate copies of minutes thereof.

Copyright © 2007 National Society of Professional Engineers for EJCDC. All rights reserved.

3. *Liaison*:

   a. Serve as Engineer's liaison with Contractor, working principally through Contractor's authorized representative, assist in providing information regarding the intent of the Contract Documents.

   b. Assist Engineer in serving as Owner's liaison with Contractor when Contractor's operations affect Owner's on-Site operations.

   c. Assist in obtaining from Owner additional details or information, when required for proper execution of the Work.

4. *Interpretation of Contract Documents:* Report to Engineer when clarifications and interpretations of the Contract Documents are needed and transmit to Contractor clarifications and interpretations as issued by Engineer.

5. *Shop Drawings and Samples*:

   a. Record date of receipt of Samples and approved Shop Drawings.

   b. Receive Samples which are furnished at the Site by Contractor, and notify Engineer of availability of Samples for examination.

6. *Modifications*:

   a. Consider and evaluate Contractor's suggestions for modifications in Drawings or Specifications and report such suggestions, together with RPR's recommendations, to Engineer.

   b. Transmit to Contractor in writing, decisions as issued by Engineer.

7. *Review of Work and Rejection of Defective Work*:

   a. Conduct on-Site observations of Contractor's work in progress to assist Engineer in determining if the Work is in general proceeding in accordance with the Contract Documents.

   b. Report to Engineer whenever RPR believes that any part of Contractor's work in progress will not produce a completed Project that conforms generally to the Contract Documents or will imperil the integrity of the design concept of the completed Project as a functioning whole as indicated in the Contract Documents, or has been damaged, or does not meet the requirements of any inspection, test or approval required to be made; and advise Engineer of that part of work in progress that RPR believes should be corrected or rejected or should be uncovered for observation, or requires special testing, inspection or approval.

Copyright © 2007 National Society of Professional Engineers for EJCDC. All rights reserved.
Revisions highlighted within the text have been prepared by Woodard & Curran on behalf of and are as approved by Owner (LOWELL)

8. *Inspections, Tests, and System Startups*:

   a. Verify that tests, equipment, and systems start-ups and operating and maintenance training are conducted in the presence of appropriate Owner's personnel, and that Contractor maintains adequate records thereof.

   b. Observe, record, and report to Engineer appropriate details relative to the test procedures and systems start-ups.

9. *Records*:

   a. Record names, addresses, fax numbers, e-mail addresses, web site locations, and telephone numbers of all Contractors, Subcontractors, and major Suppliers of materials and equipment.

   b. Maintain records for use in preparing Project documentation.

10. *Reports*:

   a. Furnish to Engineer periodic reports as required of progress of the Work and of Contractor's compliance with the progress schedule and schedule of Shop Drawing and Sample submittals.

   b. Draft and recommend to Engineer proposed Change Orders, Work Change Directives, and Field Orders. Obtain backup material from Contractor.

   c. Immediately notify Engineer of the occurrence of any Site accidents, emergencies, acts of God endangering the Work, damage to property by fire or other causes, or the discovery of any Hazardous Environmental Condition or conditions that may impede the compliant operation of existing facilities on Site.

11. *Payment Requests:* Review Applications for Payment with Contractor for compliance with the established procedure for their submission and forward with recommendations to Engineer, noting particularly the relationship of the payment requested to the schedule of values, Work completed, and materials and equipment delivered at the Site but not incorporated in the Work.

12. *Certificates, Operation and Maintenance Manuals:* During the course of the Work, verify that materials and equipment certificates, operation and maintenance manuals and other data required by the Specifications to be assembled and furnished by Contractor are applicable to the items actually installed and in accordance with the Contract Documents, and have these documents delivered to Engineer for review and forwarding to Owner prior to payment for that part of the Work.

13. *Completion*:

   a. Participate in a Substantial Completion inspection, assist in the determination of Substantial Completion and the preparation of lists of items to be completed or corrected.

Copyright © 2007 National Society of Professional Engineers for EJCDC. All rights reserved.
Revisions highlighted within the text have been prepared by Woodard & Curran on behalf of and are as approved by Owner (LOWELL)

b. Participate in a final inspection in the company of Engineer, Owner, and Contractor and prepare a final list of items to be completed and deficiencies to be remedied.

c. Observe whether all items on the final list have been completed or corrected and make recommendations to Engineer concerning acceptance and issuance of the Notice of Acceptability of the Work.

C. The RPR shall not:

1. Authorize any deviation from the Contract Documents or substitution of materials or equipment (including "or-equal" items).

2. Exceed limitations of Engineer's authority as set forth in the Contract Documents.

3. Undertake any of the responsibilities of Contractor, Subcontractors, Suppliers, or Contractor's superintendent.

4. Advise on, issue directions relative to, or assume control over any aspect of the means, methods, techniques, sequences or procedures of Contractor's work unless such advice or directions are specifically required by the Contract Documents.

5. Advise on, issue directions regarding, or assume control over safety practices, precautions, and programs in connection with the activities or operations of Owner or Contractor.

6. Participate in specialized field or laboratory tests or inspections conducted off-site by others except as specifically authorized by Engineer.

7. Accept Shop Drawing or Sample submittals from anyone other than Contractor.

8. Authorize Owner to occupy the Project in whole or in part or determine operational protocol that may affect the compliant operation of existing facilities.

9.04 *Authorized Variations in Work*

A. Engineer may authorize minor variations in the Work from the requirements of the Contract Documents which do not involve an adjustment in the Contract Price or the Contract Times and are compatible with the design concept of the completed Project as a functioning whole as indicated by the Contract Documents. These may be accomplished by a Field Order and will be binding on Owner and also on Contractor, who shall perform the Work involved promptly. If Owner or Contractor believes that a Field Order justifies an adjustment in the Contract Price or Contract Times, or both, and the parties are unable to agree on entitlement to or on the amount or extent, if any, of any such adjustment, a Claim may be made therefor as provided in Paragraph 10.05.

9.05 *Rejecting Defective Work*

A. Engineer will have authority to reject Work which Engineer believes to be defective, or that Engineer believes will not produce a completed Project that conforms to the Contract Documents or that will prejudice the integrity of the design concept of the completed Project as

Copyright © 2007 National Society of Professional Engineers for EJCDC. All rights reserved.
Revisions highlighted within the text have been prepared by Woodard & Curran on behalf of and are as approved by Owner (LOWELL)

a functioning whole as indicated by the Contract Documents. Engineer will also have authority to require special inspection or testing of the Work as provided in Paragraph 13.04, whether or not the Work is fabricated, installed, or completed.

9.06 *Shop Drawings, Change Orders and Payments*

A. In connection with Engineer's authority, and limitations thereof, as to Shop Drawings and Samples, see Paragraph 6.17.

B. In connection with Engineer's authority, and limitations thereof, as to design calculations and design drawings submitted in response to a delegation of professional design services, if any, see Paragraph 6.21.

C. In connection with Engineer's authority as to Change Orders, see Articles 10, 11, and 12.

D. In connection with Engineer's authority as to Applications for Payment, see Article 14.

9.07 *Determinations for Unit Price Work*

A. Engineer will determine the actual quantities and classifications of Unit Price Work performed by Contractor. Engineer will review with Contractor the Engineer's preliminary determinations on such matters before rendering a written decision thereon (by recommendation of an Application for Payment or otherwise). Engineer's written decision thereon will be final and binding (except as modified by Engineer to reflect changed factual conditions or more accurate data) upon Owner and Contractor, subject to the provisions of Paragraph 10.05.

9.08 *Decisions on Requirements of Contract Documents and Acceptability of Work*

A. Engineer will be the initial interpreter of the requirements of the Contract Documents and judge of the acceptability of the Work thereunder. All matters in question and other matters between Owner and Contractor arising prior to the date final payment is due relating to the acceptability of the Work, and the interpretation of the requirements of the Contract Documents pertaining to the performance of the Work, will be referred initially to Engineer in writing within 30 days of the event giving rise to the question.

B. Engineer will, with reasonable promptness, render a written decision on the issue referred. If Owner or Contractor believes that any such decision entitles them to an adjustment in the Contract Price or Contract Times or both, a Claim may be made under Paragraph 10.05. The date of Engineer's decision shall be the date of the event giving rise to the issues referenced for the purposes of Paragraph 10.05.B.

C. Engineer's written decision on the issue referred will be final and binding on Owner and Contractor, subject to the provisions of Paragraph 10.05.

D. When functioning as interpreter and judge under this Paragraph 9.08, Engineer will not show partiality to Owner or Contractor and will not be liable in connection with any interpretation or decision rendered in good faith in such capacity.

Copyright © 2007 National Society of Professional Engineers for EJCDC. All rights reserved.

9.09 *Limitations on Engineer's Authority and Responsibilities*

A. Neither Engineer's authority or responsibility under this Article 9 or under any other provision of the Contract Documents nor any decision made by Engineer in good faith either to exercise or not exercise such authority or responsibility or the undertaking, exercise, or performance of any authority or responsibility by Engineer shall create, impose, or give rise to any duty in contract, tort, or otherwise owed by Engineer to Contractor, any Subcontractor, any Supplier, any other individual or entity, or to any surety for or employee or agent of any of them.

B. Engineer will not supervise, direct, control, or have authority over or be responsible for Contractor's means, methods, techniques, sequences, or procedures of construction, or the safety precautions and programs incident thereto, or for any failure of Contractor to comply with Laws and Regulations applicable to the performance of the Work. Engineer will not be responsible for Contractor's failure to perform the Work in accordance with the Contract Documents.

C. Engineer will not be responsible for the acts or omissions of Contractor or of any Subcontractor, any Supplier, or of any other individual or entity performing any of the Work.

D. Engineer's review of the final Application for Payment and accompanying documentation and all maintenance and operating instructions, schedules, guarantees, bonds, certificates of inspection, tests and approvals, and other documentation required to be delivered by Paragraph 14.07.A will only be to determine generally that their content complies with the requirements of, and in the case of certificates of inspections, tests, and approvals that the results certified indicate compliance with, the Contract Documents.

E. The limitations upon authority and responsibility set forth in this Paragraph 9.09 shall also apply to the Resident Project Representative, if any, and assistants, if any.

F. Engineer will have no responsibility or authority:

1. To order changes in construction which will result in additional costs or which will require extensions of Contract Times;

2. To suspend all or any portion of Contractor's operations;

3. To terminate all or any portion of the Work;

4. To make final acceptance of all or any portion of the Work; and

5. To operate or maintain any portion of the Work.

9.10 *Compliance with Safety Program*

A. While at the Site, Engineer's employees and representatives shall comply with the specific applicable requirements of Contractor's safety programs of which Engineer has been informed pursuant to Paragraph 6.13.D.

Copyright © 2007 National Society of Professional Engineers for EJCDC. All rights reserved.

ARTICLE 10 – CHANGES IN THE WORK; CLAIMS

10.01 *Authorized Changes in the Work*

A. Without invalidating the Contract and without notice to any surety, Owner may, at any time or from time to time, order additions, deletions, or revisions in the Work by a Change Order, or a Work Change Directive. Upon receipt of any such document, Contractor shall promptly proceed with the Work involved which will be performed under the applicable conditions of the Contract Documents (except as otherwise specifically provided).

B. If Owner and Contractor are unable to agree on entitlement to, or on the amount or extent, if any, of an adjustment in the Contract Price or Contract Times, or both, that should be allowed as a result of a Work Change Directive, a Claim may be made therefor as provided in Paragraph 10.05.

10.02 *Unauthorized Changes in the Work*

A. Contractor shall not be entitled to an increase in the Contract Price or an extension of the Contract Times with respect to any work performed that is not required by the Contract Documents as amended, modified, or supplemented as provided in Paragraph 3.04, except in the case of an emergency as provided in Paragraph 6.16 or in the case of uncovering Work as provided in Paragraph 13.04.D.

10.03 *Execution of Change Orders*

A. Owner and Contractor shall execute appropriate Change Orders recommended by Engineer covering:

1. changes in the Work which are: (i) ordered by Owner pursuant to Paragraph 10.01.A, (ii) required because of acceptance of defective Work under Paragraph 13.08.A or Owner's correction of defective Work under Paragraph 13.09, or (iii) agreed to by the parties;

2. changes in the Contract Price or Contract Times which are agreed to by the parties, including any undisputed sum or amount of time for Work actually performed in accordance with a Work Change Directive; and

3. changes in the Contract Price or Contract Times which embody the substance of any written decision rendered by Engineer pursuant to Paragraph 10.05; provided that, in lieu of executing any such Change Order, an appeal may be taken from any such decision in accordance with the provisions of the Contract Documents and applicable Laws and Regulations, but during any such appeal, Contractor shall carry on the Work and adhere to the Progress Schedule as provided in Paragraph 6.18.A.

Copyright © 2007 National Society of Professional Engineers for EJCDC. All rights reserved.

10.04 *Notification to Surety*

A. If the provisions of any bond require notice to be given to a surety of any change affecting the general scope of the Work or the provisions of the Contract Documents (including, but not limited to, Contract Price or Contract Times), the giving of any such notice will be Contractor's responsibility. The amount of each applicable bond will be adjusted to reflect the effect of any such change.

10.05 *Claims*

A. *Engineer's Decision Required*: All Claims, except those waived pursuant to Paragraph 14.09, shall be referred to the Engineer for decision. A decision by Engineer shall be required as a condition precedent to any exercise by Owner or Contractor of any rights or remedies either may otherwise have under the Contract Documents or by Laws and Regulations in respect of such Claims.

B. *Notice:* Written notice stating the general nature of each Claim shall be delivered by the claimant to Engineer and the other party to the Contract promptly (but in no event later than ~~30~~ 14 days) after the start of the event giving rise thereto. Failure to comply with this notice requirement shall constitute a waiver of the Claim. The responsibility to substantiate a Claim shall rest with the party making the Claim. Notice of the amount or extent of the Claim, with supporting data shall be delivered to the Engineer and the other party to the Contract within ~~60~~ 30 days after the start of such event (unless Engineer allows additional time for claimant to submit additional or more accurate data in support of such Claim). A Claim for an adjustment in Contract Price shall be prepared in accordance with the provisions of Paragraph 12.01.B. A Claim for an adjustment in Contract Times shall be prepared in accordance with the provisions of Paragraph 12.02.B. Each Claim shall be accompanied by claimant's written statement that the adjustment claimed is the entire adjustment to which the claimant believes it is entitled as a result of said event. The opposing party shall submit any response to Engineer and the claimant within 30 days after receipt of the claimant's last submittal (unless Engineer allows additional time).

C. *Engineer's Action*: Engineer will review each Claim and, within 30 days after receipt of the last submittal of the claimant or the last submittal of the opposing party, if any, take one of the following actions in writing:

1. deny the Claim in whole or in part;

2. approve the Claim; or

3. notify the parties that the Engineer is unable to resolve the Claim if, in the Engineer's sole discretion, it would be inappropriate for the Engineer to do so. For purposes of further resolution of the Claim, such notice shall be deemed a denial.

D. In the event that Engineer does not take action on a Claim within said 30 days, the Claim shall be deemed denied.

Copyright © 2007 National Society of Professional Engineers for EJCDC. All rights reserved.
Revisions highlighted within the text have been prepared by Woodard & Curran on behalf of and are as approved by Owner (LOWELL)

E. Engineer's written action under Paragraph 10.05.C or denial pursuant to Paragraphs 10.05.C.3 or 10.05.D will be final and binding upon Owner and Contractor, unless Owner or Contractor invoke the dispute resolution procedure set forth in Article 16 within 30 days of such action or denial.

F. No Claim for an adjustment in Contract Price or Contract Times will be valid if not submitted in accordance with this Paragraph 10.05.

G. Contractor shall not have the right to stop performance of the Work pending resolution of a Claim.

ARTICLE 11 – COST OF THE WORK; ALLOWANCES; UNIT PRICE WORK

11.01 *Cost of the Work*

A. *Costs Included:* The term Cost of the Work means the sum of all costs, except those excluded in Paragraph 11.01.B, necessarily incurred and paid by Contractor in the proper performance of the Work. When the value of any Work covered by a Change Order or when a Claim for an adjustment in Contract Price is determined on the basis of Cost of the Work, the costs to be reimbursed to Contractor will be only those additional or incremental costs required because of the change in the Work or because of the event giving rise to the Claim. Except as otherwise may be agreed to in writing by Owner, such costs shall be in amounts no higher than those prevailing in the locality of the Project, shall not include any of the costs itemized in Paragraph 11.01.B, and shall include only the following items:

1. Payroll costs for employees in the direct employ of Contractor in the performance of the Work under schedules of job classifications agreed upon by Owner and Contractor. Such employees shall include, without limitation, superintendents, foremen, and other personnel employed full time on the Work. Payroll costs for employees not employed full time on the Work shall be apportioned on the basis of their time spent on the Work. Payroll costs shall include, but not be limited to, salaries and wages plus the cost of fringe benefits, which shall include social security contributions, unemployment, excise, and payroll taxes, workers' compensation, health and retirement benefits, bonuses, sick leave, vacation and holiday pay applicable thereto. The expenses of performing Work outside of regular working hours, on Saturday, Sunday, or legal holidays, shall be included in the above to the extent authorized by Owner.

   a. If applicable, prevailing wage requirements and rates are included in the Supplementary Conditions.

2. Cost of all materials and equipment furnished and incorporated in the Work, including costs of transportation and storage thereof, and Suppliers' field services required in connection therewith. All cash discounts shall accrue to Contractor unless Owner deposits funds with Contractor with which to make payments, in which case the cash discounts shall accrue to Owner. All trade discounts, rebates and refunds and returns from sale of surplus materials and equipment shall accrue to Owner, and Contractor shall make provisions so that they may be obtained.

Copyright © 2007 National Society of Professional Engineers for EJCDC. All rights reserved.

3. Payments made by Contractor to Subcontractors for Work performed by Subcontractors. If required by Owner, Contractor shall obtain competitive bids from subcontractors acceptable to Owner and Contractor and shall deliver such bids to Owner, who will then determine, with the advice of Engineer, which bids, if any, will be acceptable. If any subcontract provides that the Subcontractor is to be paid on the basis of Cost of the Work plus a fee, the Subcontractor's Cost of the Work and fee shall be determined in the same manner as Contractor's Cost of the Work and fee as provided in this Paragraph 11.01.

4. Costs of special consultants (including but not limited to engineers, architects, testing laboratories, surveyors, attorneys, and accountants) employed for services specifically related to the Work.

5. Supplemental costs including the following:

   a. The proportion of necessary transportation, travel, and subsistence expenses of Contractor's employees incurred in discharge of duties connected with the Work.

   b. Cost, including transportation and maintenance, of all materials, supplies, equipment, machinery, appliances, office, and temporary facilities at the Site, and hand tools not owned by the workers, which are consumed in the performance of the Work, and cost, less market value, of such items used but not consumed which remain the property of Contractor.

   c. Rentals of all construction equipment and machinery, and the parts thereof whether rented from Contractor or others in accordance with rental agreements approved by Owner with the advice of Engineer, and the costs of transportation, loading, unloading, assembly, dismantling, and removal thereof. All such costs shall be in accordance with the terms of said rental agreements. The rental of any such equipment, machinery, or parts shall cease when the use thereof is no longer necessary for the Work.

      1) Rentals of construction equipment and machinery and the parts thereof whether rented from Contractor or others in accordance with rates published in current edition of the Rental Rate Blue Book® for construction equipment published by EquipmentWatch® (www.equipmentwatch.com). When Contractor-owned equipment is ordered by Owner or Engineer to be held at standby, equipment rental rates shall be 50% of normal rate. Rental or standby shall not include time that equipment is inoperative because of malfunction or breakdown and shall cease when the use thereof is no longer necessary for the Work.

   d. Sales, consumer, use, and other similar taxes related to the Work, and for which Contractor is liable, as imposed by Laws and Regulations.

   e. Deposits lost for causes other than negligence of Contractor, any Subcontractor, or anyone directly or indirectly employed by any of them or for whose acts any of them may be liable, and royalty payments and fees for permits and licenses.

Copyright © 2007 National Society of Professional Engineers for EJCDC. All rights reserved.
Revisions highlighted within the text have been prepared by Woodard & Curran on behalf of and are as approved by Owner (LOWELL)

f. Losses and damages (and related expenses) caused by damage to the Work, not compensated by insurance or otherwise, sustained by Contractor in connection with the performance of the Work (except losses and damages within the deductible amounts of property insurance established in accordance with Paragraph 5.06.D), provided such losses and damages have resulted from causes other than the negligence of Contractor, any Subcontractor, or anyone directly or indirectly employed by any of them or for whose acts any of them may be liable. Such losses shall include settlements made with the written consent and approval of Owner. No such losses, damages, and expenses shall be included in the Cost of the Work for the purpose of determining Contractor's fee.

g. The cost of utilities, fuel, and sanitary facilities at the Site.

h. Minor expenses such as telegrams, long distance telephone calls, telephone service at the Site, express and courier services, and similar petty cash items in connection with the Work.

i. The costs of premiums for all bonds and insurance Contractor is required by the Contract Documents to purchase and maintain.

B. *Costs Excluded:* The term Cost of the Work shall not include any of the following items:

1. Payroll costs and other compensation of Contractor's officers, executives, principals (of partnerships and sole proprietorships), general managers, safety managers, engineers, architects, estimators, attorneys, auditors, accountants, purchasing and contracting agents, expediters, timekeepers, clerks, and other personnel employed by Contractor, whether at the Site or in Contractor's principal or branch office for general administration of the Work and not specifically included in the agreed upon schedule of job classifications referred to in Paragraph 11.01.A.1 or specifically covered by Paragraph 11.01.A.4, all of which are to be considered administrative costs covered by the Contractor's fee.

2. Expenses of Contractor's principal and branch offices other than Contractor's office at the Site.

3. Any part of Contractor's capital expenses, including interest on Contractor's capital employed for the Work and charges against Contractor for delinquent payments.

4. Costs due to the negligence of Contractor, any Subcontractor, or anyone directly or indirectly employed by any of them or for whose acts any of them may be liable, including but not limited to, the correction of defective Work, disposal of materials or equipment wrongly supplied, and making good any damage to property.

5. Other overhead or general expense costs of any kind and the costs of any item not specifically and expressly included in Paragraphs 11.01.A.

Copyright © 2007 National Society of Professional Engineers for EJCDC. All rights reserved.

C. *Contractor's Fee:* When all the Work is performed on the basis of cost-plus, Contractor's fee shall be determined as set forth in the Agreement. When the value of any Work covered by a Change Order or when a Claim for an adjustment in Contract Price is determined on the basis of Cost of the Work, Contractor's fee shall be determined as set forth in Paragraph 12.01.C.

D. *Documentation:* Whenever the Cost of the Work for any purpose is to be determined pursuant to Paragraphs 11.01.A and 11.01.B, Contractor will establish and maintain records thereof in accordance with generally accepted accounting practices and submit in a form acceptable to Engineer an itemized cost breakdown together with supporting data.

11.02 *Allowances*

A. It is understood that Contractor has included in the Contract Price all allowances so named in the Contract Documents and shall cause the Work so covered to be performed for such sums and by such persons or entities as may be acceptable to Owner and Engineer.

~~B. Cash Allowances:~~

~~1. Contractor agrees that:~~

~~a. the cash allowances include the cost to Contractor (less any applicable trade discounts) of materials and equipment required by the allowances to be delivered at the Site, and all applicable taxes; and~~

~~b. Contractor's costs for unloading and handling on the Site, labor, installation, overhead, profit, and other expenses contemplated for the cash allowances have been included in the Contract Price and not in the allowances, and no demand for additional payment on account of any of the foregoing will be valid.~~

~~C.~~B. Owner's Contingency Allowances:

1. Contractor agrees that any Owner's ~~a~~ contingency allowance, ~~if any,~~ is for the sole use of Owner to cover ~~un~~estimated anticipated costs for certain items.

~~D.~~C. Prior to final payment, an appropriate Change Order will be issued as recommended by Engineer to reflect actual amounts due Contractor on account of Work covered by Owner's contingency allowances, and the Contract Price shall be correspondingly adjusted.

11.03 *Unit Price Work*

A. Where the Contract Documents provide that all or part of the Work is to be Unit Price Work, initially the Contract Price will be deemed to include for all Unit Price Work an amount equal to the sum of the unit price for each separately identified item of Unit Price Work times the estimated quantity of each item as indicated in the Agreement.

B. The estimated quantities of items of Unit Price Work are not guaranteed and are solely for the purpose of comparison of Bids and determining an initial Contract Price. Determinations of the actual quantities and classifications of Unit Price Work performed by Contractor will be made by Engineer subject to the provisions of Paragraph 9.07.

Copyright © 2007 National Society of Professional Engineers for EJCDC. All rights reserved.
Revisions highlighted within the text have been prepared by Woodard & Curran on behalf of and are as approved by Owner (LOWELL)

C. Each unit price will be deemed to include an amount considered by Contractor to be adequate to cover Contractor's overhead and profit for each separately identified item.

D. Owner or Contractor may make a Claim for an adjustment in the Contract Price in accordance with Paragraph 10.05 if:

1. the quantity of any item of Unit Price Work performed by Contractor differs by plus or minus 20 percent~~materially and significantly~~ from the estimated quantity of such item indicated in the Agreement or the Unit Prices for individual items differ by plus or minus 5 percent; and

2. there is no corresponding adjustment with respect to any other item of Work; and

3. Contractor believes that Contractor is entitled to an increase in Contract Price as a result of having incurred additional expense or Owner believes that Owner is entitled to a decrease in Contract Price and the parties are unable to agree as to the amount of any such increase or decrease.

ARTICLE 12 – CHANGE OF CONTRACT PRICE; CHANGE OF CONTRACT TIMES

12.01 *Change of Contract Price*

A. The Contract Price may only be changed by a Change Order. Any Claim for an adjustment in the Contract Price shall be based on written notice submitted by the party making the Claim to the Engineer and the other party to the Contract in accordance with the provisions of Paragraph 10.05.

B. The value of any Work covered by a Change Order or of any Claim for an adjustment in the Contract Price will be determined as follows:

1. where the Work involved is covered by unit prices contained in the Contract Documents, by application of such unit prices to the quantities of the items involved (subject to the provisions of Paragraph 11.03); or

2. where the Work involved is not covered by unit prices contained in the Contract Documents, by a mutually agreed lump sum (which may include an allowance for overhead and profit not necessarily in accordance with Paragraph 12.01.C.2); or

3. where the Work involved is not covered by unit prices contained in the Contract Documents and agreement to a lump sum is not reached under Paragraph 12.01.B.2, on the basis of the Cost of the Work (determined as provided in Paragraph 11.01) plus a Contractor's fee for overhead and profit (determined as provided in Paragraph 12.01.C).

C. *Contractor's Fee:* The Contractor's fee for overhead and profit shall be determined as follows:

1. a mutually acceptable fixed fee; or

Copyright © 2007 National Society of Professional Engineers for EJCDC. All rights reserved.

2. if a fixed fee is not agreed upon, then a fee based on the following percentages of the various portions of the Cost of the Work:

   a. for costs incurred under Paragraphs 11.01.A.1 and 11.01.A.2, the Contractor's fee shall be ~~15~~ 10 percent;

   b. for costs incurred under Paragraph 11.01.A.3, the Contractor's fee shall be five percent;

   c. where one or more tiers of subcontracts are on the basis of Cost of the Work plus a fee and no fixed fee is agreed upon, the intent of Paragraphs 12.01.C.2.a and 12.01.C.2.b is that the Subcontractor who actually performs the Work, at whatever tier, will be paid a fee of ~~15~~ 10 percent of the costs incurred by such Subcontractor under Paragraphs 11.01.A.1 and 11.01.A.2 and that any higher tier Subcontractor and Contractor will each be paid a fee of five percent of the amount paid to the next lower tier Subcontractor, provided, however, that on any subcontracted work the total maximum fee to be paid by Owner under this subparagraph shall be no greater than 27 percent of the costs incurred by the Subcontractor who actually performs the Work;

   d. no fee shall be payable on the basis of costs itemized under Paragraphs 11.01.A.4, 11.01.A.5, and 11.01.B;

   e. the amount of credit to be allowed by Contractor to Owner for any change which results in a net decrease in cost will be the amount of the actual net decrease in cost plus a deduction in Contractor's fee by an amount equal to five percent of such net decrease; and

   f. when both additions and credits are involved in any one change, the adjustment in Contractor's fee shall be computed on the basis of the net change in accordance with Paragraphs 12.01.C.2.a through 12.01.C.2.e, inclusive.

12.02 *Change of Contract Times*

A. The Contract Times may only be changed by a Change Order. Any Claim for an adjustment in the Contract Times shall be based on written notice submitted by the party making the Claim to the Engineer and the other party to the Contract in accordance with the provisions of Paragraph 10.05.

B. Any adjustment of the Contract Times covered by a Change Order or any Claim for an adjustment in the Contract Times will be determined in accordance with the provisions of this Article 12.

Copyright © 2007 National Society of Professional Engineers for EJCDC. All rights reserved.

12.03 *Delays*

A. Where Contractor is prevented from completing any part of the Work within the Contract Times due to delay beyond the control of Contractor, the Contract Times will be extended in an amount equal to the time lost due to such delay if a Claim is made therefor as provided in Paragraph 12.02.A. Delays beyond the control of Contractor shall include, but not be limited to, acts or neglect by Owner, acts or neglect of utility owners or other contractors performing other work as contemplated by Article 7, fires, floods, epidemics, abnormal weather conditions, acts of war or terrorism, or acts of God (force majeure).

B. If Owner, Engineer, or other contractors or utility owners performing other work for Owner as contemplated by Article 7, or anyone for whom Owner is responsible, delays, disrupts, or interferes with the performance or progress of the Work, then Contractor shall be entitled to an equitable adjustment in the Contract Price or the Contract Times, or both. Contractor's entitlement to an adjustment of the Contract Times is conditioned on such adjustment being essential to Contractor's ability to complete the Work within the Contract Times.

C. If Contractor is delayed in the performance or progress of the Work by fire, flood, epidemic, abnormal weather conditions, acts of war or terrorism, acts of God, acts or failures to act of utility owners not under the control of Owner, or other causes not the fault of and beyond control of Owner and Contractor, then Contractor shall be entitled to an equitable adjustment in Contract Times, if such adjustment is essential to Contractor's ability to complete the Work within the Contract Times. Such an adjustment shall be Contractor's sole and exclusive remedy for the delays described in this Paragraph 12.03.C.

D. Owner, Engineer, and their officers, directors, members, partners, employees, agents, consultants, or subcontractors shall not be liable to Contractor for any claims, costs, losses, or damages (including but not limited to all fees and charges of engineers, architects, attorneys, and other professionals and all court or arbitration or other dispute resolution costs) sustained by Contractor on or in connection with any other project or anticipated project.

E. Contractor shall not be entitled to an adjustment in Contract Price or Contract Times for delays within the control of Contractor. Delays attributable to and within the control of a Subcontractor or Supplier shall be deemed to be delays within the control of Contractor.

ARTICLE 13 – TESTS AND INSPECTIONS; CORRECTION, REMOVAL OR ACCEPTANCE OF DEFECTIVE WORK

13.01 *Notice of Defects*

A. Prompt notice of all defective Work of which Owner or Engineer has actual knowledge will be given to Contractor. Defective Work may be rejected, corrected, or accepted as provided in this Article 13.

Copyright © 2007 National Society of Professional Engineers for EJCDC. All rights reserved.

13.02 *Access to Work*

A. Owner, Engineer, their consultants and other representatives and personnel of Owner, independent testing laboratories, and governmental agencies with jurisdictional interests will have access to the Site and the Work at reasonable times for their observation, inspection, and testing. Contractor shall provide them proper and safe conditions for such access and advise them of Contractor's safety procedures and programs so that they may comply therewith as applicable.

13.03 *Tests and Inspections*

A. Contractor shall give Engineer timely notice of readiness of the Work for all required inspections, tests, or approvals and shall cooperate with inspection and testing personnel to facilitate required inspections or tests.

B. Owner shall employ and pay for the services of an independent testing laboratory to perform all inspections, tests, or approvals required by the Contract Documents except:

1. for inspections, tests, or approvals covered by Paragraphs 13.03.C and 13.03.D below;

2. that costs incurred in connection with tests or inspections conducted pursuant to Paragraph 13.04.B shall be paid as provided in Paragraph 13.04.C; and

3. as otherwise specifically provided in the Contract Documents and where responsibility for a specific inspection or test is expressly allocated to Owner in the Specifications or by Laws and Regulations.

C. If Laws or Regulations of any public body having jurisdiction require any Work (or part thereof) specifically to be inspected, tested, or approved by an employee or other representative of such public body, Contractor shall assume full responsibility for arranging and obtaining such inspections, tests, or approvals, pay all costs in connection therewith, and furnish Engineer the required certificates of inspection or approval.

D. Except as provided in 13.03.B above, Contractor shall be responsible for arranging and obtaining and shall pay all costs in connection with any inspections, tests, or approvals required for Owner's and Engineer's acceptance of materials or equipment to be incorporated in the Work; or acceptance of materials, mix designs, or equipment submitted for approval prior to Contractor's purchase thereof for incorporation in the Work. Such inspections, tests, or approvals shall be performed by organizations acceptable to Owner and Engineer.

E. If any Work (or the work of others) that is to be inspected, tested, or approved is covered by Contractor without written concurrence of Engineer, Contractor shall, if requested by Engineer, uncover such Work for observation.

F. Uncovering Work as provided in Paragraph 13.03.E shall be at Contractor's expense unless Contractor has given Engineer timely notice of Contractor's intention to cover the same and Engineer has not acted with reasonable promptness in response to such notice.

Copyright © 2007 National Society of Professional Engineers for EJCDC. All rights reserved.
Revisions highlighted within the text have been prepared by Woodard & Curran on behalf of and are as approved by Owner (LOWELL)

13.04 *Uncovering Work*

A. If any Work is covered contrary to the written request of Engineer, it must, if requested by Engineer, be uncovered for Engineer's observation and replaced at Contractor's expense.

B. If Engineer considers it necessary or advisable that covered Work be observed by Engineer or inspected or tested by others, Contractor, at Engineer's request, shall uncover, expose, or otherwise make available for observation, inspection, or testing as Engineer may require, that portion of the Work in question, furnishing all necessary labor, material, and equipment.

C. If it is found that the uncovered Work is defective, Contractor shall pay all claims, costs, losses, and damages (including but not limited to all fees and charges of engineers, architects, attorneys, and other professionals and all court or arbitration or other dispute resolution costs) arising out of or relating to such uncovering, exposure, observation, inspection, and testing, and of satisfactory replacement or reconstruction (including but not limited to all costs of repair or replacement of work of others); and Owner shall be entitled to an appropriate decrease in the Contract Price. If the parties are unable to agree as to the amount thereof, Owner may make a Claim therefor as provided in Paragraph 10.05.

D. If the uncovered Work is not found to be defective, Contractor shall be allowed an increase in the Contract Price or an extension of the Contract Times, or both, directly attributable to such uncovering, exposure, observation, inspection, testing, replacement, and reconstruction. If the parties are unable to agree as to the amount or extent thereof, Contractor may make a Claim therefor as provided in Paragraph 10.05.

13.05 *Owner May Stop the Work*

A. If the Work is defective, or Contractor fails to supply sufficient skilled workers or suitable materials or equipment, or fails to perform the Work in such a way that the completed Work will conform to the Contract Documents, Owner may order Contractor to stop the Work, or any portion thereof, until the cause for such order has been eliminated; however, this right of Owner to stop the Work shall not give rise to any duty on the part of Owner to exercise this right for the benefit of Contractor, any Subcontractor, any Supplier, any other individual or entity, or any surety for, or employee or agent of any of them.

13.06 *Correction or Removal of Defective Work*

A. Promptly after receipt of written notice, Contractor shall correct all defective Work, whether or not fabricated, installed, or completed, or, if the Work has been rejected by Engineer, remove it from the Project and replace it with Work that is not defective. Contractor shall pay all claims, costs, losses, and damages (including but not limited to all fees and charges of engineers, architects, attorneys, and other professionals and all court or arbitration or other dispute resolution costs) arising out of or relating to such correction or removal (including but not limited to all costs of repair or replacement of work of others).

B. When correcting defective Work under the terms of this Paragraph 13.06 or Paragraph 13.07, Contractor shall take no action that would void or otherwise impair Owner's special warranty and guarantee, if any, on said Work.

Copyright © 2007 National Society of Professional Engineers for EJCDC. All rights reserved.

13.07 *Correction Period*

A. If within one year after the date of Substantial Completion (or such longer period of time as may be prescribed by the terms of any applicable special guarantee required by the Contract Documents) or by any specific provision of the Contract Documents (such as partial utilization in Paragraph 14.05), any Work is found to be defective, or if the repair of any damages to the land or areas made available for Contractor's use by Owner or permitted by Laws and Regulations as contemplated in Paragraph 6.11.A is found to be defective, Contractor shall promptly, without cost to Owner and in accordance with Owner's written instructions:

1. repair such defective land or areas; or

2. correct such defective Work; or

3. if the defective Work has been rejected by Owner, remove it from the Project and replace it with Work that is not defective, and

4. satisfactorily correct or repair or remove and replace any damage to other Work, to the work of others or other land or areas resulting therefrom.

B. If Contractor does not promptly comply with the terms of Owner's written instructions, or in an emergency where delay would cause serious risk of loss or damage, Owner may have the defective Work corrected or repaired or may have the rejected Work removed and replaced. All claims, costs, losses, and damages (including but not limited to all fees and charges of engineers, architects, attorneys, and other professionals and all court or arbitration or other dispute resolution costs) arising out of or relating to such correction or repair or such removal and replacement (including but not limited to all costs of repair or replacement of work of others) will be paid by Contractor and may be deducted from amounts otherwise due the Contractor.

C. In special circumstances where a particular item of equipment is placed in continuous service before Substantial Completion of all the Work, the correction period for that item may start to run from an earlier date if so provided in the Specifications.

D. Where defective Work, including materials, equipment and supplies or as defined in manufacturers' and Suppliers' warranties (and damage to other Work resulting therefrom) has been corrected or removed and replaced under this Paragraph 13.07, the correction period hereunder with respect to such Work will be extended for an additional period of one year after such correction or removal and replacement has been satisfactorily completed and the terms of this Paragraph 13.07 will continue to apply.

E. Contractor's obligations under this Paragraph 13.07 are in addition to any other obligation or warranty. The provisions of this Paragraph 13.07 shall not be construed as a substitute for, or a waiver of, the provisions of any applicable statute of limitation or repose.

Copyright © 2007 National Society of Professional Engineers for EJCDC. All rights reserved.
Revisions highlighted within the text have been prepared by Woodard & Curran on behalf of and are as approved by Owner (LOWELL)

13.08 *Acceptance of Defective Work*

A. If, instead of requiring correction or removal and replacement of defective Work, Owner (and, prior to Engineer's recommendation of final payment, Engineer) prefers to accept it, Owner may do so. Contractor shall pay all claims, costs, losses, and damages (including but not limited to all fees and charges of engineers, architects, attorneys, and other professionals and all court or arbitration or other dispute resolution costs) attributable to Owner's evaluation of and determination to accept such defective Work (such costs to be approved by Engineer as to reasonableness) and for the diminished value of the Work to the extent not otherwise paid by Contractor pursuant to this sentence. If any such acceptance occurs prior to Engineer's recommendation of final payment, a Change Order will be issued incorporating the necessary revisions in the Contract Documents with respect to the Work, and Owner shall be entitled to an appropriate decrease in the Contract Price, reflecting the diminished value of Work so accepted. If the parties are unable to agree as to the amount thereof, Owner may make a Claim therefor as provided in Paragraph 10.05. If the acceptance occurs after such recommendation, an appropriate amount will be paid by Contractor to Owner.

13.09 *Owner May Correct Defective Work*

A. If Contractor fails within a reasonable time after written notice from Engineer to correct defective Work, or to remove and replace rejected Work as required by Engineer in accordance with Paragraph 13.06.A, or if Contractor fails to perform the Work in accordance with the Contract Documents, or if Contractor fails to comply with any other provision of the Contract Documents, Owner may, after seven days written notice to Contractor, or immediately in the case of an emergency, correct, or remedy any such deficiency.

B. In exercising the rights and remedies under this Paragraph 13.09, Owner shall proceed expeditiously. In connection with such corrective or remedial action, Owner may exclude Contractor from all or part of the Site, take possession of all or part of the Work and suspend Contractor's services related thereto, take possession of Contractor's tools, appliances, construction equipment and machinery at the Site, and incorporate in the Work all materials and equipment stored at the Site or for which Owner has paid Contractor but which are stored elsewhere. Contractor shall allow Owner, Owner's representatives, agents and employees, Owner's other contractors, and Engineer and Engineer's consultants access to the Site to enable Owner to exercise the rights and remedies under this Paragraph.

C. All claims, costs, losses, and damages (including but not limited to all fees and charges of engineers, architects, attorneys, and other professionals and all court or arbitration or other dispute resolution costs) incurred or sustained by Owner in exercising the rights and remedies under this Paragraph 13.09 will be charged against Contractor, and a Change Order will be issued incorporating the necessary revisions in the Contract Documents with respect to the Work; and Owner shall be entitled to an appropriate decrease in the Contract Price. If the parties are unable to agree as to the amount of the adjustment, Owner may make a Claim therefor as provided in Paragraph 10.05. Such claims, costs, losses and damages will include but not be limited to all costs of repair, or replacement of work of others destroyed or damaged by correction, removal, or replacement of Contractor's defective Work.

Copyright © 2007 National Society of Professional Engineers for EJCDC. All rights reserved.

D. Contractor shall not be allowed an extension of the Contract Times because of any delay in the performance of the Work attributable to the exercise by Owner of Owner's rights and remedies under this Paragraph 13.09.

ARTICLE 14 – PAYMENTS TO CONTRACTOR AND COMPLETION

14.01 *Schedule of Values*

A. The Schedule of Values established as provided in Paragraph 2.07.A will serve as the basis for progress payments and will be incorporated into a form of Application for Payment acceptable to Engineer. Progress payments on account of Unit Price Work will be based on the number of units completed.

14.02 *Progress Payments*

A. Applications for Payments:

1. At least 20 days before the date established in the Agreement for each progress payment (but not more often than once a month), Contractor shall submit to Engineer for review an Application for Payment filled out and signed by Contractor covering the Work completed as of the date of the Application and accompanied by such supporting documentation as is required by the Contract Documents. If payment is requested on the basis of materials and equipment not incorporated in the Work but delivered and suitably stored at the Site or at another location agreed to in writing, the Application for Payment shall also be accompanied by a bill of sale, invoice, or other documentation warranting that Owner has received the materials and equipment free and clear of all Liens and evidence that the materials and equipment are covered by appropriate property insurance or other arrangements to protect Owner's interest therein, all of which must be satisfactory to Owner.

2. Beginning with the second Application for Payment, each Application shall include an affidavit of Contractor stating that all previous progress payments received on account of the Work have been applied on account to discharge Contractor's legitimate obligations associated with prior Applications for Payment.

3. The amount of retainage with respect to progress payments will be as stipulated in the Agreement.

B. Review of Applications:

1. Engineer will, within 10 days after receipt of each Application for Payment, either indicate in writing a recommendation of payment and present the Application to Owner or return the Application to Contractor indicating in writing Engineer's reasons for refusing to recommend payment. In the latter case, Contractor may make the necessary corrections and resubmit the Application.

Copyright © 2007 National Society of Professional Engineers for EJCDC. All rights reserved.
Revisions highlighted within the text have been prepared by Woodard & Curran on behalf of and are as approved by Owner (LOWELL)

2. Engineer's recommendation of any payment requested in an Application for Payment will constitute a representation by Engineer to Owner, based on Engineer's observations of the executed Work as an experienced and qualified design professional, and on Engineer's review of the Application for Payment and the accompanying data and schedules, that to the best of Engineer's knowledge, information and belief:

   a. the Work has progressed to the point indicated;

   b. the quality of the Work is generally in accordance with the Contract Documents (subject to an evaluation of the Work as a functioning whole prior to or upon Substantial Completion, the results of any subsequent tests called for in the Contract Documents, a final determination of quantities and classifications for Unit Price Work under Paragraph 9.07, and any other qualifications stated in the recommendation); and

   c. the conditions precedent to Contractor's being entitled to such payment appear to have been fulfilled in so far as it is Engineer's responsibility to observe the Work.

3. By recommending any such payment Engineer will not thereby be deemed to have represented that:

   a. inspections made to check the quality or the quantity of the Work as it has been performed have been exhaustive, extended to every aspect of the Work in progress, or involved detailed inspections of the Work beyond the responsibilities specifically assigned to Engineer in the Contract Documents; or

   b. there may not be other matters or issues between the parties that might entitle Contractor to be paid additionally by Owner or entitle Owner to withhold payment to Contractor.

4. Neither Engineer's review of Contractor's Work for the purposes of recommending payments nor Engineer's recommendation of any payment, including final payment, will impose responsibility on Engineer:

   a. to supervise, direct, or control the Work, or

   b. for the means, methods, techniques, sequences, or procedures of construction, or the safety precautions and programs incident thereto, or

   c. for Contractor's failure to comply with Laws and Regulations applicable to Contractor's performance of the Work, or

   d. to make any examination to ascertain how or for what purposes Contractor has used the moneys paid on account of the Contract Price, or

   e. to determine that title to any of the Work, materials, or equipment has passed to Owner free and clear of any Liens.

Copyright © 2007 National Society of Professional Engineers for EJCDC. All rights reserved.

5. Engineer may refuse to recommend the whole or any part of any payment if, in Engineer's opinion, it would be incorrect to make the representations to Owner stated in Paragraph 14.02.B.2. Engineer may also refuse to recommend any such payment or, because of subsequently discovered evidence or the results of subsequent inspections or tests, revise or revoke any such payment recommendation previously made, to such extent as may be necessary in Engineer's opinion to protect Owner from loss because:

   a. the Work is defective, or completed Work has been damaged, requiring correction or replacement;

   b. the Contract Price has been reduced by Change Orders;

   c. Owner has been required to correct defective Work or complete Work in accordance with Paragraph 13.09; or

   d. Engineer has actual knowledge of the occurrence of any of the events enumerated in Paragraph 15.02.A.

C. Payment Becomes Due:

1. Ten days after presentation of the Application for Payment to Owner with Engineer's recommendation, the amount recommended will (subject to the provisions of Paragraph 14.02.D) become due, and when due will be paid by Owner to Contractor.

D. Reduction in Payment:

1. Owner may refuse to make payment of the full amount recommended by Engineer because:

   a. claims have been made against Owner on account of Contractor's performance or furnishing of the Work;

   b. Liens have been filed in connection with the Work, except where Contractor has delivered a specific bond satisfactory to Owner to secure the satisfaction and discharge of such Liens and provides an indemnity satisfactory to Owner for all claims, costs, losses and damages arising out of such Liens;

   c. there are other items entitling Owner to a set-off against the amount recommended including liability for liquidated damages and correction of defective work by Owner or others; or

   d. Owner has actual knowledge of the occurrence of any of the events enumerated in Paragraphs 14.02.B.5.a through 14.02.B.5.c or Paragraph 15.02.A.

2. If Owner refuses to make payment of the full amount recommended by Engineer, Owner will give Contractor immediate written notice (with a copy to Engineer) stating the reasons for such action and promptly pay Contractor any amount remaining after deduction of the amount so withheld. Owner shall promptly pay Contractor the amount so withheld, or any adjustment thereto agreed to by Owner and Contractor, when Contractor remedies the reasons for such action.

Copyright © 2007 National Society of Professional Engineers for EJCDC. All rights reserved.

3. Upon a subsequent determination that Owner's refusal of payment was not justified, the amount wrongfully withheld shall be treated as an amount due as determined by Paragraph 14.02.C.1 and subject to interest as provided in the Agreement.

14.03 *Contractor's Warranty of Title*

A. Contractor warrants and guarantees that title to all Work, materials, and equipment covered by any Application for Payment, whether incorporated in the Project or not, will pass to Owner no later than the time of payment free and clear of all Liens.

14.04 *Substantial Completion*

A. When Contractor considers the entire Work ready for its intended use and final testing has been completed in accordance with the General Requirements, Contractor shall notify Owner and Engineer in writing that the entire Work is substantially complete (except for items specifically listed by Contractor as incomplete) using the Notice of Substantial Completion form included in the Contract Documents, submit the Contractor's written general warranty and guarantee per Paragraph 6.19.D., and request that Engineer issue a certificate of Substantial Completion.

B. Promptly after Contractor's notification, Owner, Contractor, and Engineer shall make an inspection of the Work to determine the status of completion. If Engineer does not consider the Work substantially complete, Engineer will notify Contractor in writing giving the reasons therefor.

C. If Engineer considers the Work substantially complete, Engineer will deliver to Owner a tentative certificate of Substantial Completion which shall fix the date of Substantial Completion using the Certificate of Substantial Completion included in the Contract Documents. There shall be attached to the certificate a tentative list of items to be completed or corrected before final payment (Punch List). Owner shall have seven days after receipt of the tentative certificate during which to make written objection to Engineer as to any provisions of the certificate or attached list. If, after considering such objections, Engineer concludes that the Work is not substantially complete, Engineer will, within 14 days after submission of the tentative certificate to Owner, notify Contractor in writing, stating the reasons therefor. If, after consideration of Owner's objections, Engineer considers the Work substantially complete, Engineer will, within said 14 days, execute and deliver to Owner and Contractor a definitive certificate of Substantial Completion (with a revised tentative list of items to be completed or corrected) reflecting such changes from the tentative certificate as Engineer believes justified after consideration of any objections from Owner.

D. At the time of delivery of the tentative certificate of Substantial Completion, Engineer will deliver to Owner and Contractor a written recommendation as to division of responsibilities pending final payment between Owner and Contractor with respect to security, operation, safety, and protection of the Work, maintenance, heat, utilities, insurance, and warranties and guarantees. Unless Owner and Contractor agree otherwise in writing and so inform Engineer in writing prior to Engineer's issuing the definitive certificate of Substantial Completion, Engineer's aforesaid recommendation will be binding on Owner and Contractor until final payment.

Copyright © 2007 National Society of Professional Engineers for EJCDC. All rights reserved.

E. Owner shall have the right to exclude Contractor from the Site after the date of Substantial Completion subject to allowing Contractor reasonable access to remove its property and complete or correct items on the tentative list.

14.05 *Partial Utilization*

A. Prior to Substantial Completion of all the Work, Owner may use or occupy any substantially completed part of the Work which has specifically been identified in the Contract Documents, or which Owner, Engineer, and Contractor agree constitutes a separately functioning and usable part of the Work that can be used by Owner for its intended purpose without significant interference with Contractor's performance of the remainder of the Work, subject to the following conditions:

1. Owner at any time may request Contractor in writing to permit Owner to use or occupy any such part of the Work which Owner believes to be ready for its intended use and substantially complete. If and when Contractor agrees that such part of the Work is substantially complete, Contractor, Owner, and Engineer will follow the procedures of Paragraph 14.04.A through D for that part of the Work.

2. Contractor at any time may notify Owner and Engineer in writing that Contractor considers any such part of the Work ready for its intended use and substantially complete and request Engineer to issue a certificate of Substantial Completion for that part of the Work.

3. Within a reasonable time after either such request, Owner, Contractor, and Engineer shall make an inspection of that part of the Work to determine its status of completion. If Engineer does not consider that part of the Work to be substantially complete, Engineer will notify Owner and Contractor in writing giving the reasons therefor. If Engineer considers that part of the Work to be substantially complete, the provisions of Paragraph 14.04 will apply with respect to certification of Substantial Completion of that part of the Work and the division of responsibility in respect thereof and access thereto.

4. No use or occupancy or separate operation of part of the Work may occur prior to compliance with the requirements of Paragraph 5.10 regarding property insurance.

B. Owner may request in writing that Contractor permit Owner to separately operate any part of the Work although it is not substantially complete subject to the following conditions.

1. A copy of such request will be sent to Engineer and, within a reasonable time thereafter, Owner, Contractor and Engineer shall make an inspection of that part of the Work not substantially complete to determine the status of completion and will prepare a Punch List before final payment.

2. If Contractor does not indicate in writing to Owner and Engineer that such part of the Work is not ready for separate operation by Owner, Engineer will finalize the Punch List and will deliver such list to Owner and Contractor, together with a written recommendation as to the division of responsibilities between Owner and Contractor with respect to security, operation, safety, maintenance, utilities, insurance, warranties and guarantees for that part of the Work pending final payment.

Copyright © 2007 National Society of Professional Engineers for EJCDC. All rights reserved.
Revisions highlighted within the text have been prepared by Woodard & Curran on behalf of and are as approved by Owner (LOWELL)

3. The Engineer's recommendation and Punch List will become binding upon Owner and Contractor at the time the Owner takes over and separately operates such part of the Work unless otherwise agreed in writing and so informed Engineer.

4. During such separate operation by Owner and prior to Substantial Completion of such part of the Work, Owner shall allow Contractor reasonable access to complete or correct Punch List and to complete other related Work.

14.06 *Final Inspection*

A. Upon written notice from Contractor that the entire Work or an agreed portion thereof is complete, Engineer will promptly make a final inspection with Owner and Contractor and will notify Contractor in writing of all particulars in which this inspection reveals that the Work is incomplete or defective. Contractor shall immediately take such measures as are necessary to complete such Work or remedy such deficiencies.

14.07 *Final Payment*

A. Application for Payment:

1. After Contractor has, in the opinion of Engineer, satisfactorily completed all corrections identified during the final inspection and has delivered, in accordance with the Contract Documents, all maintenance and operating instructions, schedules, guarantees, warranties, updated Contractor's written general warranty and guarantee per Paragraph 6.19.D if modified., bonds, certificates or other evidence of insurance, certificates of inspection, marked-up record documents (as provided in Paragraph 6.12), and other documents, and Engineer has indicated that the Work is acceptable (subject to the provisions of Paragraph 14.09), Contractor may make application for final payment following the procedure for progress payments.

2. The final Application for Payment shall be accompanied (except as previously delivered) by:

   a. all documentation called for in the Contract Documents, including but not limited to the evidence of insurance required by Paragraph 5.04.B.6;

   b. consent of the surety, if any, to final payment;

   c. a list of all Claims against Owner that Contractor believes are unsettled; and

   d. complete and legally effective releases or waivers (satisfactory to Owner) of all Lien rights arising out of or Liens filed in connection with the Work.

3. In lieu of the releases or waivers of Liens specified in Paragraph 14.07.A.2 and as approved by Owner, Contractor may furnish receipts or releases in full and an affidavit of Contractor that: (i) the releases and receipts include all labor, services, material, and equipment for which a Lien could be filed; and (ii) all payrolls, material and equipment bills, and other indebtedness connected with the Work for which Owner might in any way be responsible, or which might in any way result in liens or other burdens on Owner's property, have been

Copyright © 2007 National Society of Professional Engineers for EJCDC. All rights reserved.

paid or otherwise satisfied. If any Subcontractor or Supplier fails to furnish such a release or receipt in full, Contractor may furnish a bond or other collateral satisfactory to Owner to indemnify Owner against any Lien.

B. Engineer's Review of Application and Acceptance:

1. If, on the basis of Engineer's observation of the Work during construction and final inspection, and Engineer's review of the final Application for Payment and accompanying documentation as required by the Contract Documents, Engineer is satisfied that the Work has been completed and Contractor's other obligations under the Contract Documents have been fulfilled, Engineer will, within ten days after receipt of the final Application for Payment, indicate in writing Engineer's recommendation of payment and present the Application for Payment to Owner for payment. At the same time Engineer will also give written notice to Owner and Contractor that the Work is acceptable using the Certificate of Completion form included in the Contract Documents, subject to the provisions of Paragraph 14.09. Otherwise, Engineer will return the Application for Payment to Contractor, indicating in writing the reasons for refusing to recommend final payment, in which case Contractor shall make the necessary corrections and resubmit the Application for Payment.

C. Payment Becomes Due:

1. Thirty days after the presentation to Owner of the Application for Payment and accompanying documentation, the amount recommended by Engineer, less any sum Owner is entitled to set off against Engineer's recommendation, including but not limited to liquidated damages, will become due and will be paid by Owner to Contractor.

14.08 *Final Completion Delayed*

A. If, through no fault of Contractor, final completion of the Work is significantly delayed, and if Engineer so confirms, Owner shall, upon receipt of Contractor's final Application for Payment (for Work fully completed and accepted) and recommendation of Engineer, and without terminating the Contract, make payment of the balance due for that portion of the Work fully completed and accepted as detailed on the Certificate of Completion. If the remaining balance to be held by Owner for Work not fully completed or corrected is less than the retainage stipulated in the Agreement, and if bonds have been furnished as required in Paragraph 5.01, the written consent of the surety to the payment of the balance due for that portion of the Work fully completed and accepted shall be submitted by Contractor to Engineer with the Application for such payment. Such payment shall be made under the terms and conditions governing final payment, except that it shall not constitute a waiver of Claims.

14.09 *Waiver of Claims*

A. The making and acceptance of final payment will constitute:

1. a waiver of all Claims by Owner against Contractor, except Claims arising from unsettled Liens, from defective Work appearing after final inspection pursuant to Paragraph 14.06, from failure to comply with the Contract Documents or the terms of any special guarantees

Copyright © 2007 National Society of Professional Engineers for EJCDC. All rights reserved.
Revisions highlighted within the text have been prepared by Woodard & Curran on behalf of and are as approved by Owner (LOWELL)

specified therein, or from Contractor's continuing obligations under the Contract Documents; and

2. a waiver of all Claims by Contractor against Owner other than those previously made in accordance with the requirements herein and expressly acknowledged by Owner in writing as still unsettled.

ARTICLE 15 – SUSPENSION OF WORK AND TERMINATION

15.01 *Owner May Suspend Work*

A. At any time and without cause, Owner may suspend the Work or any portion thereof for a period of not more than 90 consecutive days by notice in writing to Contractor and Engineer which will fix the date on which Work will be resumed. Contractor shall resume the Work on the date so fixed. Contractor shall be granted an adjustment in the Contract Price or an extension of the Contract Times, or both, directly attributable to any such suspension if Contractor makes a Claim therefor as provided in Paragraph 10.05.

B. If the performance of all or any part of the Work is suspended, delayed, or interrupted due to an order of a court of competent jurisdiction as a result of environmental litigation, as defined below, the Owner, at the request of the Contractor, shall determine whether the order is due in any part to the acts or omissions of the Contractor or a Subcontractor at any tier not required by the terms of this Contract. If it is determined that the order is not due in any part to acts or omissions of the Contractor or a Subcontractor at any tier other than as required by the terms of this Contract, such suspension, delay, or interruption shall be considered as if ordered by the Owner in the administration of this Contract under the terms of Article 15 except that it will not be possible for the Owner to fix the date for resumption of the Work.

1. The term "environmental litigation", as used herein, means a claim or lawsuit alleging that the Work has or will have an adverse effect on the environment or that the Owner has not duly considered, either substantively or procedurally, the effect of the Work on the environment.

15.02 *Owner May Terminate for Cause*

A. The occurrence of any one or more of the following events will justify termination for cause:

1. Contractor's ~~persistent~~ failure to perform the Work in accordance with the Contract Documents (including, but not limited to, failure to supply sufficient skilled workers or suitable materials or equipment or failure to adhere to the Progress Schedule established under Paragraph 2.07 as adjusted from time to time pursuant to Paragraph 6.04);

2. Contractor's disregard of Laws or Regulations of any public body having jurisdiction;

3. Contractor's repeated disregard of the authority of Engineer; or

4. Contractor's violation in any substantial way of any provisions of the Contract Documents; or~~.~~

Copyright © 2007 National Society of Professional Engineers for EJCDC. All rights reserved.

5. Contractor commences a voluntary case under any chapter of the Bankruptcy Code (Title 11, United States Code), as now or hereafter in effect, or if Contractor takes any equivalent or similar action by filing a petition or otherwise under any Laws and Regulations in effect at such time relating to the bankruptcy or insolvency; or

6. a petition is filed against Contractor under any chapter of the Bankruptcy Code as now or hereafter in effect at the time of filing, or if a petition is filed seeking any such equivalent or similar relief against Contractor under any Laws and Regulations in effect at the time relating to bankruptcy or insolvency; or

7. Contractor makes a general assignment for the benefit of creditors; or

8. a trustee, receiver, custodian or agent of Contractor is appointed under applicable law or under contract, whose appointment or authority to take charge of property of Contractor is for the purpose of enforcing a Lien against such property or for the purpose of general administration of such property for the benefit of Contractor's creditors; or

9. Contractor admits in writing its inability to pay its debts generally as they become due.

B. If one or more of the events identified in Paragraph 15.02.A occur, Owner may, after giving Contractor (and surety) seven days written notice of its intent to terminate the services of Contractor:

1. exclude Contractor from the Site, and take possession of the Work and of all Contractor's tools, appliances, construction equipment, and machinery at the Site, and use the same to the full extent they could be used by Contractor (without liability to Contractor for trespass or conversion);

2. incorporate in the Work all materials and equipment stored at the Site or for which Owner has paid Contractor but which are stored elsewhere; and

3. complete the Work as Owner may deem expedient.

C. If Owner proceeds as provided in Paragraph 15.02.B, Contractor shall not be entitled to receive any further payment until the Work is completed. If the unpaid balance of the Contract Price exceeds all claims, costs, losses, and damages (including but not limited to all fees and charges of engineers, architects, attorneys, and other professionals and all court or arbitration or other dispute resolution costs) sustained by Owner arising out of or relating to completing the Work, such excess will be paid to Contractor. If such claims, costs, losses, and damages exceed such unpaid balance, Contractor shall pay the difference to Owner. Such claims, costs, losses, and damages incurred by Owner will be reviewed by Engineer as to their reasonableness and, when so approved by Engineer, incorporated in a Change Order. When exercising any rights or remedies under this Paragraph, Owner shall not be required to obtain the lowest price for the Work performed.

Copyright © 2007 National Society of Professional Engineers for EJCDC. All rights reserved.
Revisions highlighted within the text have been prepared by Woodard & Curran on behalf of and are as approved by Owner (LOWELL)

D. Notwithstanding Paragraphs 15.02.B and 15.02.C, Contractor's services will not be terminated if Contractor begins within seven days of receipt of notice of intent to terminate to correct its failure to perform and proceeds diligently to cure such failure within no more than 30 days of receipt of said notice.

E. Where Contractor's services have been so terminated by Owner, the termination will not affect any rights or remedies of Owner against Contractor then existing or which may thereafter accrue. Any retention or payment of moneys due Contractor by Owner will not release Contractor from liability.

F. If and to the extent that Contractor has provided a performance bond under the provisions of Paragraph 5.01.A, the termination procedures of that bond shall supersede the provisions of Paragraphs 15.02.B and 15.02.C.

15.03 *Owner May Terminate For Convenience*

A. Upon seven days written notice to Contractor and Engineer, Owner may, without cause and without prejudice to any other right or remedy of Owner, terminate the Contract. In such case, Contractor shall be paid for (without duplication of any items):

1. completed and acceptable Work executed in accordance with the Contract Documents prior to the effective date of termination, including fair and reasonable sums for overhead and profit on such Work;

2. expenses sustained prior to the effective date of termination in performing services and furnishing labor, materials, or equipment as required by the Contract Documents in connection with uncompleted Work, plus fair and reasonable sums for overhead and profit on such expenses;

3. ~~all~~ reasonable claims, costs, losses, and damages (including but not limited to ~~all~~ reasonable fees and charges of engineers, architects, attorneys, and other professionals and ~~all~~ reasonable court or arbitration or other dispute resolution costs) incurred in settlement of terminated contracts with Subcontractors, Suppliers, and others; and

4. reasonable expenses directly attributable to termination.

B. Contractor shall not be paid on account of loss of anticipated profits or revenue or other economic loss arising out of or resulting from such termination.

15.04 *Contractor May Stop Work or Terminate*

A. If, through no act or fault of Contractor, (i) the Work is suspended for more than 90 consecutive days by Owner or under an order of court or other public authority, or (ii) Engineer fails to act on any Application for Payment within 30 days after it is submitted, or (iii) Owner fails for 30 days to pay Contractor any sum finally determined to be due, then Contractor may, upon seven days written notice to Owner and Engineer, and provided Owner or Engineer do not remedy such suspension or failure within that time, terminate the Contract and recover from Owner payment on the same terms as provided in Paragraph 15.03.

Copyright © 2007 National Society of Professional Engineers for EJCDC. All rights reserved.

B. In lieu of terminating the Contract and without prejudice to any other right or remedy, if Engineer has failed to act on an Application for Payment within 30 days after it is submitted, or Owner has failed for 30 days to pay Contractor any sum finally determined to be due, Contractor may, seven days after written notice to Owner and Engineer, stop the Work until payment is made of all such amounts due Contractor, including interest thereon. The provisions of this Paragraph 15.04 are not intended to preclude Contractor from making a Claim under Paragraph 10.05 for an adjustment in Contract Price or Contract Times or otherwise for expenses or damage directly attributable to Contractor's stopping the Work as permitted by this Paragraph.

ARTICLE 16 – DISPUTE RESOLUTION

16.01 *Methods and Procedures*

A. Either Owner or Contractor may request mediation of any Claim submitted to Engineer for a decision under Paragraph 10.05 before such decision becomes final and binding. The mediation will be governed by the Construction Industry Mediation Rules of the American Arbitration Association in effect as of the Effective Date of the Agreement. The request for mediation shall be submitted in writing to the American Arbitration Association and the other party to the Contract. Timely submission of the request shall stay the effect of Paragraph 10.05.E.

B. Owner and Contractor shall participate in the mediation process in good faith. The process shall be concluded within 60 days of filing of the request. The date of termination of the mediation shall be determined by application of the mediation rules referenced above.

C. If the Claim is not resolved by mediation, Engineer's action under Paragraph 10.05.C or a denial pursuant to Paragraphs 10.05.C.3 or 10.05.D shall become final and binding 30 days after termination of the mediation unless, within that time period, Owner or Contractor:

1. elects in writing to invoke any dispute resolution process provided for in the Supplementary Conditions; or

2. agrees with the other party to submit the Claim to another dispute resolution process.~~; or~~

3. gives written notice to the other party of the intent to submit the Claim to a court of competent jurisdiction.

ARTICLE 17 – MISCELLANEOUS

17.01 *Giving Notice*

A. Whenever any provision of the Contract Documents requires the giving of written notice, it will be deemed to have been validly given if:

1. delivered in person to the individual or to a member of the firm or to an officer of the corporation for whom it is intended; or

2. delivered at or sent by registered or certified mail, postage prepaid, to the last business address known to the giver of the notice.

Copyright © 2007 National Society of Professional Engineers for EJCDC. All rights reserved.
Revisions highlighted within the text have been prepared by Woodard & Curran on behalf of and are as approved by Owner (LOWELL)

17.02 *Computation of Times*

A. When any period of time is referred to in the Contract Documents by days, it will be computed to exclude the first and include the last day of such period. If the last day of any such period falls on a Saturday or Sunday or on a day made a legal holiday by the law of the applicable jurisdiction, such day will be omitted from the computation.

17.03 *Cumulative Remedies*

A. The duties and obligations imposed by these General Conditions and the rights and remedies available hereunder to the parties hereto are in addition to, and are not to be construed in any way as a limitation of, any rights and remedies available to any or all of them which are otherwise imposed or available by Laws or Regulations, by special warranty or guarantee, or by other provisions of the Contract Documents. The provisions of this Paragraph will be as effective as if repeated specifically in the Contract Documents in connection with each particular duty, obligation, right, and remedy to which they apply.

17.04 *Survival of Obligations*

A. All representations, indemnifications, warranties, and guarantees made in, required by, or given in accordance with the Contract Documents, as well as all continuing obligations indicated in the Contract Documents, will survive final payment, completion, and acceptance of the Work or termination or completion of the Contract or termination of the services of Contractor.

17.05 *Controlling Law*

A. This Contract is to be governed by the law of the state in which the Project is located. See Supplementary Conditions for specific requirements.

17.06 *Headings*

A. Article and paragraph headings are inserted for convenience only and do not constitute parts of these General Conditions.

17.07 *Professional Fees and Court Costs Included*

A. In any action or proceeding to enforce or interpret any contractual provision or to resolve any conflict or dispute relating to or arising from this Contract, the prevailing party shall be entitled to recover, as part of its claim, award or judgment, reasonable attorneys; fees and associated costs and expenses, including expenses of engineering, claims and other consultants.

END OF SECTION

Copyright © 2007 National Society of Professional Engineers for EJCDC. All rights reserved.

SECTION 00 73 05

SUPPLEMENTARY CONDITIONS

The following sections modify or supplement the Standard General Conditions of the Construction Contract ("General Conditions") included in Section 00 72 05 and are in addition to the modifications highlighted within the text thereof. All provisions which are not so modified or supplemented remain in full force and effect. The Supplementary Conditions may include certain provisions required by Laws and Regulations. Contractor is responsible to determine and obtain applicable Laws and Regulations and to review and interpret the full text of such Laws and Regulations.

The terms used in these Supplementary Conditions have the meanings stated in the Standard General Conditions and as may be included within the Sections listed below.

00 73 10 Specific Project Requirements
00 73 19 Health and Safety Requirements
00 73 36 Equal Employment Opportunity Requirements
00 73 43 Wage Rate Requirements
00 73 46 Wage Determination Schedule
00 73 73 Statutory Requirements

This page intentionally left blank

SECTION 00 73 10

PROJECT SPECIFIC REQUIREMENTS

GENERAL

The address system used herein is the same as the address system used in the General Conditions, with the prefix "SC" added thereto. Additional terms used in this Section have the meanings stated below, which are applicable to both the singular and plural thereof.

This Section may include certain provisions required by Laws and Regulations, but does not represent or reflect all applicable provisions and policies or Laws and Regulations, and may only include excerpts and portions thereof. Other required provisions and policies, and Laws and Regulations, shall be deemed to be so included and incorporated herein. Contractor is solely responsible to determine, obtain, review and interpret the full text of applicable provisions and policies, Regulations, and Laws.

SC-1.01.B ***Additional Terms:*** Add the following new definition.

6. *Installer* -- The entity engaged by Contractor or a Subcontractor for installation, erection, application and similar required operations of a particular portion of the Work at the Site, including who has specialty experience in the Work they are engaged to perform.

Add the following after Paragraph 2.05.B.

C. Additionally, within 10 days after the Effective Date of the Agreement, Contractor shall submit a Construction Operations Plan incorporating the schedules submitted pursuant to Paragraph 2.05.A and covering the following.

1. Construction methods and sequence of operations

2. Proposed Site access

3. Proposed erosion control measures and proposed measures to minimize impacts to existing vegetation and impacts to water quality in compliance with the General Requirements.

SC-2.07 ***Initial Acceptance of Schedules***

Add the following immediately after subparagraph 2.07.A.3.

4. Contractor's Construction Operations Plan submitted pursuant to Paragraph 2.05.C. will be acceptable to Engineer if it accurately and reasonably addresses all aspects of the Work.

SC 4.01 ***Availability of Lands***

Pursuant to Paragraph 4.01.A, the following easements and rights-of-way exist for the Project:

1. NONE

SC-4.02 ***Subsurface and Physical Conditions***

A. Pursuant to Paragraph 4.02.A,

1. the following reports of explorations and tests of subsurface conditions at or contiguous to the Site are known to Owner:

a. NONE

2. The following drawings of physical conditions relating to existing surface or subsurface structures at the Site (except Underground Facilities) are known to Owner:

a. NONE

SC 4.05 ***Reference Points***

Pursuant to Paragraph 4.05.A, surveys exist for the Project and are reflected on the Drawings. Documentation is on file with Owner and available upon request.

SC-4.06 ***Hazardous Environmental Conditions at Site***

A. Pursuant to Paragraph 4.06.A,

1. the following reports regarding Hazardous Environmental Conditions at the Site are known to Owner:

a. NONE

2. The following drawings regarding Hazardous Environmental Conditions at the Site are known to Owner:

a. NONE

SC-5.04 ***Contractor's Insurance***

Pursuant to subparagraph 5.04.B.1, certificates of insurance and additional insured endorsements naming the Owner and Engineer shall read exactly as follows.

"City of Lowell and Woodard & Curran are named as additionally insured".

Pursuant to subparagraph 5.04.C.5, also provide Owner's Protective Liability in the amount of $3,000,000 (per occurrence for bodily injury & property damage combined single limit)

SC-6.02 ***Labor; Working Hours***

Pursuant to Paragraph 6.02.B, regular working hours for this Project are 7 a.m. to 3 p.m., Monday through Friday.

SC-6.08 ***Permits***

Pursuant to subparagraph 6.08.A.1, Contractor shall comply with the following licenses and permits Owner has obtained for the Project.

- MassDEP Beneficial Use Determination, included in Section 01 15 00
- Massachusetts Department of Environmental Protection (MassDEP) BRP WS 25 Treatment Plant Modifications Design Permit Approval for Activity No. X262578 dated September 8, 2014, included in Section 01 15 00

SC-6.09 ***Laws and Regulations***

Pursuant to Paragraph 6.09, the Contractor shall comply with additional requirements included in Section 00 73 73

SC-7.01 ***Related Work at Site***

Pursuant to Paragraph 7.01, Owner has not and does not intend to separately contract for other work on the Project at the Site.

END OF SECTION

This page intentionally left blank

SECTION 00 73 19

HEALTH AND SAFETY REQUIREMENTS

Contractor shall comply with the following minimum requirements and is solely responsible to determine, obtain, review and interpret the full text of applicable Laws and Regulations.

A. Code of Federal Regulations, Chapter XVII-Occupational Safety and Health Administration (OSHA), Department of Labor, Title 29, Part 1926, Safety and Health Regulations for Construction

1. Contractor shall strictly comply with the Hazard Communication Standard 1910.1200 regulated by OSHA, including providing and maintaining Safety Data Sheets, labeling of hazardous substances, and providing required protective equipment and training and instruction to personnel on the Site including Owner and Engineer's personnel.

B. ANSI/ASSE A10 series of safety construction standards including the "Manual of Accident Prevention In Construction" published by The Associated General Contractors of America

C. Protection of personnel and equipment under electric lines: comply with the AASHTO Guide on Occupational Safety on Highway Construction Projects, Subpart N, 1926.550, relating to construction equipment clearances at overhead electric lines especially during operations using large vehicles.

D. Pursuant to *MGL Chapter 30, Section 39M and 39S*, all employees to be employed at the Work Site will have successfully completed a course in construction safety and health approved by the United States Occupational Safety and Health Administration that is at least 10 hours in duration at the time the employee begins Work, and who shall furnish documentation of successful completion of said course with the first certified payroll report for each employee. Any employee found on a Work Site subject to this section without documentation of successful completion of a course in construction safety and health approved by the United States Occupational Safety and Health Administration that is at least 10 hours in duration shall be subject to immediate removal.

E. This Project is also subject to the following.

- MGL Chapter 82, *The Laying Out, Alteration, Relocation and Discontinuance Of Public Ways, And Specific Repairs Thereon, Section 40:*

  Section 40 Definitions
  Section 40A Excavations; notice
  Section 40B Designation of location of underground facilities
  Section 40C Excavator's responsibility to maintain designation markings; damage caused by excavator
  Section 40D Local laws requiring excavation permits; public ways

- MGL Chapter 82A, *Excavation and Trench Safety*

  Section 1 Unattended open trenches; safety hazards; rules and regulations; fines
  Section 2 Trench excavating permits; permits issued by board or officer; certificate of insurance; fees
  Section 3 Form of trench excavation permits; required statements
  Section 4 Definitions
  Section 5 Additional requirements

- MGL Chapter 149

  Section 6C Health and safety of general public and asbestos workers; rules and regulations
  Section 18A Sanitary and safety conditions; tools
  Section 18B Confined spaces; ventilation
  Section 18C Power transmission equipment
  Section 18D Ropes, hooks and cranes; use and operation
  Section 18E Safety precautions in dangerous undertakings
  Section 18F Explosives
  Section 18G Industrial truck and internal combustion equipment
  Section 129A Shoring Trenches for local governments

- Massachusetts Department of Labor and Industries, Division of Occupational Safety (Chapter 454 CMR 10.00 et seq.)

- Massachusetts Department of Public Safety "*Excavation and Trench Safety*" (Chapter 520 CMR 14.00 et seq.)

END OF SECTION

SECTION 00 73 36

EQUAL EMPLOYMENT OPPORTUNITY REQUIREMENTS

A. The Contractor shall not discriminate against any employee or applicant for employment because of race, color, religion, sex, or national origin. The Contractor shall take affirmative action to ensure that applicants are employed, and that employees are treated during employment, without regard to their race, color, religion, sex or national origin. Such action shall include, but not be limited to the following: employment, upgrading, demotion, or transfer; recruitment or recruitment advertising; layoff or termination; rates of pay or other forms of compensation; provision of non-segregated facilities and selection for training, including apprenticeship. The Contractor agrees to post in conspicuous places, available to employees and applicants for employment, notices setting forth the provisions of this nondiscrimination clause.

B. The Contractor shall, in all solicitations or advancements for employees placed by or on behalf of the Contractor, state that all qualified applicants shall receive consideration for employment without regard to race, color, religion, sex or national origin.

C. The Contractor shall comply with all provisions of Executive Order No. 11246 as amended, and of the rules, Regulations, and relevant orders of the Secretary of Labor as applicable.

D. In the event of the Contractor's noncompliance with the nondiscrimination clauses of the Contract or with any of such rules, Regulations, or orders, the Contract may be cancelled, terminated, or suspended in whole or in part and the Contractor may be declared ineligible for further contracts in accordance with procedures authorized in Executive Order No. 11246 as amended, and such other sanctions may be imposed and remedies invoked as provided in Executive Order No. 11246 as amended, or by rule, Regulation, or order of the Secretary of Labor, or as otherwise provided by Law.

E. The Contractor shall include the applicable provisions of the above paragraphs in every subcontract or purchase order unless exempted by rules, Regulations, or orders of the Secretary of Labor issued pursuant to Section 204 of Executive Order No. 11246 as amended, so that such provisions shall be binding upon each Subcontractor or vendor or Supplier.

END OF SECTION

This page intentionally left blank

SECTION 00 73 43

WAGE RATE REQUIREMENTS

The content of this Section does not represent or reflect all applicable Laws and Regulations and may only include excerpts and portions of certain Laws and Regulations. Other provisions required by statute shall be deemed to be so included and incorporated herein. Contractor is solely responsible to determine, obtain, review and interpret the full text of applicable Laws and Regulations.

The Project is subject to minimum wage rates as issued by the Executive Office of Labor and Workforce Development, Department of Labor Standards and the requirements of MGL Chapter 149, Sections 26, 27 and 27A to 27H. Wage Determination Schedules are included in Section 00 73 46. In addition, pursuant to MGL Chapter 149, Section 34B, wages paid to reserve police officers shall be the same prevailing rate of wage paid to regular police officers at the location of the Project.

Submit required records and statements of compliance in accordance with MGL Chapter 149, Section 27B using the latest Weekly Payroll and Compliance forms available on the following website. Copies included in this section are for information only.

http://www.mass.gov/lwd/labor-standards/prevailing-wage-program

The Official Website of the Executive Office of Labor and Workforce Development (EOLWD)

Labor and Workforce Development

Home > Labor Standards > Prevailing Wage Program > A Guide to the MA Prevailing Wage Law for...

A Guide to the MA Prevailing Wage Law for Awarding Authorities

A Guide to the MA Prevailing Wage Law for Awarding Authorities

Prevailing Wage for Awarding Authorities

What is the Prevailing Wage Law?

The Massachusetts Prevailing Wage Law, G.L. c. 149, §§ 26 - 27; c. 5, § 1; c. 71, § 7A and c. 121B, § 29B ("The Prevailing Wage Law") establishes minimum wage rates for workers on public construction projects, workers engaged in school bus transportation, operators of vehicles and equipment engaged by public entities for public works purposes (including solid waste and recycling), workers engaged by employers which provide janitorial services for state buildings, office moving services, and for certain employees of housing authorities. These different prevailing wage law requirements are discussed below.

The Massachusetts Executive Office of Labor and Workforce Development, Department of Labor Standards (DLS) is the agency responsible for issuing prevailing wage rate sheets and administering the Prevailing Wage Law. The Massachusetts Attorney General's Fair Labor Practices Division is responsible for enforcing the law. If contractors fail to comply with any provision of the Prevailing Wage Law or if you believe a contractor is not paying prevailing wages, you should contact the Attorney General's Fair Labor Division at (617) 727-3465.

What are the types of activities to which the Prevailing Wage Law applies?

Following is a list of the different Prevailing Wage Law requirements and links to a more detailed discussion of each of them.

- Public construction work, including additions and alterations to public buildings, soil explorations, test borings, and demolition. Public Construction, G.L. c. 149, §§26-27D.
- Use of trucks, vehicles, and other equipment to perform public works functions. Trucks, Vehicles, and Other Equipment Performing Public Works Functions (Non-Construction), G.L. c. 149, §27F.
- Moving office furniture and fixtures. Moving Office Furniture and Fixtures, G.L. c. 149, §27G.
- Cleaning state office buildings or buildings leased by the state. State Cleaning Contracts, G.L. c.149, §27H.
- Transportation of students to public schools, including charter schools, in towns with a population greater than 16,000. School Bus Transportation G.L. c. 71, §7A.
- Prevailing wages are also set for certain housing authority employees such as maintenance workers, laborers, and mechanics. G.L. c. 121B, §29B.

PUBLIC CONSTRUCTION
G.L. c. 149, §§27-27D

Before soliciting bids for any public construction project, an awarding authority must obtain a prevailing wage rate sheet from DLS. DLS has standardized forms that awarding authorities must use to request prevailing wage rates. Awarding authorities must complete an online prevailing wage request at www.mass.gov/dols/pw. In the rare instance where an awarding authority does not have access to the internet, the awarding authority must call DLS at 617-626-6953 to receive instructions on mailing a hard copy request form.

Once the awarding authority receives the prevailing wage schedule for a particular project, it must include the rate sheet in its invitation for bids. If the project does not require an invitation for bids (for example, if the project will cost less than $10,000) the awarding authority must make sure that anyone who is providing a price or estimate for the construction project has a copy of the prevailing wage rate sheet for that project. Once a contractor has been selected, the prevailing wage rate sheet is made a part of the contract for that project.

Each prevailing wage rate sheet applies only to the public construction project for which it is issued. The prevailing wage rates for each construction project are in effect for 90 days from the date of issue. Projects not bid within 90 days of the issued rates will require the awarding authority to request new prevailing wage rates. Once a project has been bid, the prevailing wage rate will apply for the duration of any contracts which result from that bid, except in the case of multi-year projects. For projects lasting more than one year, the awarding authority must request annual updates to the wage schedules (see FAQs below for more information on annual updates).

New rates must be obtained from the Department of Labor Standards each time an invitation for bids is issued for a construction project. An awarding authority must obtain prevailing wage rates for every public construction project, regardless of the dollar amount of the contract or whether it must actually be bid.

During the construction project, it is the awarding authority's responsibility to monitor contractors' compliance with the prevailing wage law. Weekly payroll records must be collected from all contractors and kept on file. Weekly payroll report forms are available on DLS' website. These weekly payroll records must be maintained by the awarding authority for three years following final payment on the construction project. Contractors and subcontractors are required to submit weekly payroll records to the awarding authority by first class or electronic mail. A statement of compliance must accompany each weekly payroll submittal. A sample certified payroll report form and statement of compliance are available from DLS at www.mass.gov/dols/pw.

WEEKLY PAYROLL RECORDS REPORT & STATEMENT OF COMPLIANCE

In accordance with Massachusetts General Law c. 149, §27B, a true and accurate record must be kept of all persons employed on the public works project for which the enclosed rates have been provided. A Payroll Form is available from the Department of Labor Standards (DLS) at www.mass.gov/dols/pw and includes all the information required to be kept by law. Every contractor or subcontractor is required to keep these records and preserve them for a period of three years from the date of completion of the contract.

On a weekly basis, every contractor and subcontractor is required to submit a certified copy of their weekly payroll records to the awarding authority; this includes the payroll forms and the Statement of Compliance form. The certified payroll records must be submitted either by regular mail or by e-mail to the awarding authority. Once collected, the awarding authority is required to preserve those records for three years from the date of completion of the project.

Each such contractor and subcontractor shall furnish weekly **and** within 15 days after completion of its portion of the work, to the awarding authority directly by first-class mail or e-mail, a statement, executed by the contractor, subcontractor or by any authorized officer thereof who supervised the payment of wages, this form, accompanied by their payroll:

STATEMENT OF COMPLIANCE

_____, 20_____

I,_____,_____
(Name of signatory party) (Title)

do hereby state:

That I pay or supervise the payment of the persons employed by

_____ on the _____
(Contractor, subcontractor or public body) (Building or project)

and that all mechanics and apprentices, teamsters, chauffeurs and laborers employed on said project have been paid in accordance with wages determined under the provisions of sections twenty-six and twenty-seven of chapter one hundred and forty nine of the General Laws.

Signature _____

Title _____

05/14

MASSACHUSETTS WEEKLY CERTIFIED PAYROLL REPORT FORM

Company's Name:	Address:	Phone No.:	Payroll No.:

Employer's Signature:	Title:	Contract No:	Tax Payer ID Number	Work Week Ending:

Awarding Authority's Name:	Public Works Project Name:	Public Works Project Location:	Min. Wage Rate Sheet Number

General / Prime Contractor's Name:	Subcontractor's Name:		"Employer" Hourly Fringe Benefit Contributions				
						(B+C+D+E)	(A x F)

Employee Name & Complete Address	Work Classification:	Employee is OSHA 10 certified (?)	Appr. Rate (%)	Hours Worked Su.	Mo.	Tu.	We.	Th.	Fr.	Sa.	Project Hours (A) / All Other Hours	Hourly Base Wage (B)	Health & Welfare Insurance (C)	ERISA Pension Plan (D)	Supp. Unemp. (E)	Total Hourly Prev. Wage (F)	Project Gross Wages / Total Gross Wages	Check No. (H)

Are all apprentice employees identified above currently registered with the MA DLS's Division of Apprentice Standards? YES ☐ NO ☐

For all apprentices performing work during the reporting period, attach a copy of the apprentice identification card issued by the Massachusetts Department of Labor Standards / Division of Apprentice Standards. No apprentices are identified above ☐

NOTE: Pursuant to MGL c. 149, s. 27B, every contractor and subcontractor is required to submit a **true and accurate** copy of their certified weekly payroll records to the awarding authority by first-class mail or e-mail. In addition, each weekly payroll must be accompanied by a statement of compliance signed by the employer. Failure to comply may result in the commencement of a criminal action or the issuance of a civil citation.

Page _____ of _____

Date Received by Awarding Authority
/ /

This page intentionally left blank

SECTION 00 73 46

WAGE DETERMINATION SCHEDULE

The Project is subject to the following wage rates (included in this section) in accordance with the requirements included in Section 00 73 43.

- Minimum wage rates as issued by the Executive Office of Labor and Workforce Development, Department of Labor Standards pursuant to MGL Chapter 149, Sections 26, 27 and 27A to 27H

END OF SECTION

This page intentionally left blank

DEVAL L. PATRICK
Governor

THE COMMONWEALTH OF MASSACHUSETTS
EXECUTIVE OFFICE OF LABOR AND WORKFORCE DEVELOPMENT
DEPARTMENT OF LABOR STANDARDS

Prevailing Wage Rates

As determined by the Director under the provisions of the Massachusetts General Laws, Chapter 149, Sections 26 to 27H

RACHEL KAPRIELIAN
Secretary
HEATHER E. ROWE
Director

Awarding Authority: City of Lowell

Contract Number: **City/Town:** LOWELL

Description of Work: Residuals Handling Facilities Upgrade - Install an underdrain system & decant weirs in the existing residual lagoons, replace pumps & controls in the recycle pump station & associated electrical work.

Job Location: 820 Pawtucket Blvd

Information about Prevailing Wage Schedules for Awarding Authorities and Contractors

- This wage schedule applies only to the specific project referenced at the top of this page and uniquely identified by the "Wage Request Number" on all pages of this schedule.
- An Awarding Authority must request an updated wage schedule from the Department of Labor Standards ("DLS") if it has not opened bids or selected a contractor within 90 days of the date of issuance of the wage schedule. For CM AT RISK projects (bid pursuant to G.L. c.149A), the earlier of: (a) the execution date of the GMP Amendment, or (b) the bid for the first construction scope of work must be within 90-days of the wage schedule issuance date.
- The wage schedule shall be incorporated in any advertisement or call for bids for the project as required by M.G.L. c. 149, § 27. The wage schedule shall be made a part of the contract awarded for the project. The wage schedule must be posted in a conspicuous place at the work site for the life of the project in accordance with M.G.L. c. 149 § 27. The wages listed on the wage schedule must be paid to employees performing construction work on the project whether they are employed by the prime contractor, a filed sub-bidder, or any sub-contractor.
- All apprentices working on the project are required to be registered with the Massachusetts Division of Apprentice Standards (DAS). Apprentice must keep his/her apprentice identification card on his/her person during all work hours on the project. An apprentice registered with DAS may be paid the lower apprentice wage rate at the applicable step as provided on the prevailing wage schedule. **If an apprentice rate is not listed on the prevailing wage schedule for the trade in which an apprentice is registered with the DAS, the apprentice must be paid the journeyworker's rate for the trade.**
- The wage rates will remain in effect for the duration of the project, except in the case of multi-year public construction projects. For construction projects lasting longer than one year, awarding authorities must request an updated wage schedule. Awarding authorities are required to request these updates no later than two weeks before the anniversary of the date the contract was executed by the awarding authority and the general contractor. For multi-year CM AT RISK projects, awarding authority must request an annual update no later than two weeks before the anniversary date, determined as the earlier of: (a) the execution date of the GMP Amendment, or (b) the execution date of the first amendment to permit procurement of construction services. Contractors are required to obtain the wage schedules from awarding authorities, and to pay no less than these rates to covered workers. The annual update requirement is not applicable to 27F "rental of equipment" contracts.
- Every contractor or subcontractor which performs construction work on the project is required to submit weekly payroll reports and a Statement of Compliance directly to the awarding authority by mail or email and keep them on file for three years. Each weekly payroll report must contain: the employee's name, address, occupational classification, hours worked, and wages paid. Do not submit weekly payroll reports to DLS. A sample of a payroll reporting form may be obtained at http://www.mass.gov/dols/pw.
- Contractors with questions about the wage rates or classifications included on the wage schedule have an affirmative obligation to inquire with DLS at (617) 626-6953.
- Employees not receiving the prevailing wage rate set forth on the wage schedule may report the violation to the Fair Labor Division of the office of the Attorney General at (617) 727-3465.
- Failure of a contractor or subcontractor to pay the prevailing wage rates listed on the wage schedule to all employees who perform construction work on the project is a violation of the law and subjects the contractor or subcontractor to civil and criminal penalties.

Issue Date: 09/05/2014 **Wage Request Number:** 20140905-030

Classification	Effective Date	Base Wage	Health	Pension	Supplemental Unemployment	Total Rate
Construction						
(2 AXLE) DRIVER - EQUIPMENT	08/01/2014	$31.30	$9.91	$8.80	$0.00	$50.01
TEAMSTERS JOINT COUNCIL NO. 10 ZONE B	12/01/2014	$31.30	$9.91	$9.33	$0.00	$50.54
	06/01/2015	$31.65	$9.91	$9.33	$0.00	$50.89
	08/01/2015	$31.65	$10.41	$9.33	$0.00	$51.39
	12/01/2015	$31.65	$10.41	$10.08	$0.00	$52.14
	06/01/2016	$32.15	$10.41	$10.08	$0.00	$52.64
	08/01/2016	$32.15	$10.91	$10.08	$0.00	$53.14
	12/01/2016	$32.15	$10.91	$10.89	$0.00	$53.95
(3 AXLE) DRIVER - EQUIPMENT	08/01/2014	$31.37	$9.91	$8.80	$0.00	$50.08
TEAMSTERS JOINT COUNCIL NO. 10 ZONE B	12/01/2014	$31.37	$9.91	$9.33	$0.00	$50.61
	06/01/2015	$31.72	$9.91	$9.33	$0.00	$50.96
	08/01/2015	$31.72	$10.41	$9.33	$0.00	$51.46
	12/01/2015	$31.72	$10.41	$10.08	$0.00	$52.21
	06/01/2016	$32.22	$10.41	$10.08	$0.00	$52.71
	08/01/2016	$32.22	$10.91	$10.08	$0.00	$53.21
	12/01/2016	$32.22	$10.91	$10.89	$0.00	$54.02
(4 & 5 AXLE) DRIVER - EQUIPMENT	08/01/2014	$31.49	$9.91	$8.80	$0.00	$50.20
TEAMSTERS JOINT COUNCIL NO. 10 ZONE B	12/01/2014	$31.49	$9.91	$9.33	$0.00	$50.73
	06/01/2015	$31.84	$9.91	$9.33	$0.00	$51.08
	08/01/2015	$31.84	$10.41	$9.33	$0.00	$51.58
	12/01/2015	$31.84	$10.41	$10.08	$0.00	$52.33
	06/01/2016	$32.34	$10.41	$10.08	$0.00	$52.83
	08/01/2016	$32.34	$10.91	$10.08	$0.00	$53.33
	12/01/2016	$32.34	$10.91	$10.89	$0.00	$54.14
ADS/SUBMERSIBLE PILOT	08/01/2014	$87.36	$9.80	$18.17	$0.00	$115.33
PILE DRIVER LOCAL 56 (ZONE 1)	08/01/2015	$90.51	$9.80	$18.17	$0.00	$118.48
AIR TRACK OPERATOR	06/01/2014	$31.10	$7.30	$12.10	$0.00	$50.50
LABORERS - ZONE 2	12/01/2014	$31.60	$7.30	$12.10	$0.00	$51.00
	06/01/2015	$32.10	$7.30	$12.10	$0.00	$51.50
	12/01/2015	$32.60	$7.30	$12.10	$0.00	$52.00
	06/01/2016	$33.10	$7.30	$12.10	$0.00	$52.50
	12/01/2016	$33.85	$7.30	$12.10	$0.00	$53.25
For apprentice rates see "Apprentice- LABORER"						
ASBESTOS REMOVER - PIPE / MECH. EQUIPT.	06/01/2014	$31.58	$10.40	$5.95	$0.00	$47.93
HEAT & FROST INSULATORS LOCAL 6 (BOSTON)	12/01/2014	$32.48	$10.40	$5.95	$0.00	$48.83
	06/01/2015	$33.43	$10.40	$5.95	$0.00	$49.78
	12/01/2015	$34.38	$10.40	$5.95	$0.00	$50.73
ASPHALT RAKER	06/01/2014	$30.60	$7.30	$12.10	$0.00	$50.00
LABORERS - ZONE 2	12/01/2014	$31.10	$7.30	$12.10	$0.00	$50.50
	06/01/2015	$31.60	$7.30	$12.10	$0.00	$51.00
	12/01/2015	$32.10	$7.30	$12.10	$0.00	$51.50
	06/01/2016	$32.60	$7.30	$12.10	$0.00	$52.00
	12/01/2016	$33.35	$7.30	$12.10	$0.00	$52.75
For apprentice rates see "Apprentice- LABORER"						

Classification	Effective Date	Base Wage	Health	Pension	Supplemental Unemployment	Total Rate
ASPHALT/CONCRETE/CRUSHER PLANT-ON SITE *OPERATING ENGINEERS LOCAL 4*	06/01/2014	$41.49	$10.00	$14.20	$0.00	$65.69
	12/01/2014	$42.49	$10.00	$14.20	$0.00	$66.69
	06/01/2015	$43.24	$10.00	$14.20	$0.00	$67.44
	12/01/2015	$44.49	$10.00	$14.20	$0.00	$68.69
	06/01/2016	$45.24	$10.00	$14.20	$0.00	$69.44
	12/01/2016	$46.49	$10.00	$14.20	$0.00	$70.69
	06/01/2017	$47.49	$10.00	$14.20	$0.00	$71.69
	12/01/2017	$48.49	$10.00	$14.20	$0.00	$72.69
For apprentice rates see "Apprentice- OPERATING ENGINEERS"						
BACKHOE/FRONT-END LOADER *OPERATING ENGINEERS LOCAL 4*	06/01/2014	$41.49	$10.00	$14.20	$0.00	$65.69
	12/01/2014	$42.49	$10.00	$14.20	$0.00	$66.69
	06/01/2015	$43.24	$10.00	$14.20	$0.00	$67.44
	12/01/2015	$44.49	$10.00	$14.20	$0.00	$68.69
	06/01/2016	$45.24	$10.00	$14.20	$0.00	$69.44
	12/01/2016	$46.49	$10.00	$14.20	$0.00	$70.69
	06/01/2017	$47.49	$10.00	$14.20	$0.00	$71.69
	12/01/2017	$48.49	$10.00	$14.20	$0.00	$72.69
For apprentice rates see "Apprentice- OPERATING ENGINEERS"						
BARCO-TYPE JUMPING TAMPER *LABORERS - ZONE 2*	06/01/2014	$30.60	$7.30	$12.10	$0.00	$50.00
	12/01/2014	$31.10	$7.30	$12.10	$0.00	$50.50
	06/01/2015	$31.60	$7.30	$12.10	$0.00	$51.00
	12/01/2015	$32.10	$7.30	$12.10	$0.00	$51.50
	06/01/2016	$32.60	$7.30	$12.10	$0.00	$52.00
	12/01/2016	$33.35	$7.30	$12.10	$0.00	$52.75
For apprentice rates see "Apprentice- LABORER"						
BLOCK PAVER, RAMMER / CURB SETTER *LABORERS - ZONE 2*	06/01/2014	$31.10	$7.30	$12.10	$0.00	$50.50
	12/01/2014	$31.60	$7.30	$12.10	$0.00	$51.00
	06/01/2015	$32.10	$7.30	$12.10	$0.00	$51.50
	12/01/2015	$32.60	$7.30	$12.10	$0.00	$52.00
	06/01/2016	$33.10	$7.30	$12.10	$0.00	$52.50
	12/01/2016	$33.85	$7.30	$12.10	$0.00	$53.25
For apprentice rates see "Apprentice- LABORER"						
BOILER MAKER *BOILERMAKERS LOCAL 29*	01/01/2010	$37.70	$6.97	$11.18	$0.00	$55.85

Classification	Effective Date	Base Wage	Health	Pension	Supplemental Unemployment	Total Rate

Apprentice - *BOILERMAKER - Local 29*

Effective Date - 01/01/2010

Step	percent	Apprentice Base Wage	Health	Pension	Supplemental Unemployment	Total Rate
1	65	$24.51	$6.97	$11.18	$0.00	$42.66
2	65	$24.51	$6.97	$11.18	$0.00	$42.66
3	70	$26.39	$6.97	$11.18	$0.00	$44.54
4	75	$28.28	$6.97	$11.18	$0.00	$46.43
5	80	$30.16	$6.97	$11.18	$0.00	$48.31
6	85	$32.05	$6.97	$11.18	$0.00	$50.20
7	90	$33.93	$6.97	$11.18	$0.00	$52.08
8	95	$35.82	$6.97	$11.18	$0.00	$53.97

Notes:

Apprentice to Journeyworker Ratio:1:5

BRICK/STONE/ARTIFICIAL MASONRY (INCL. MASONRY WATERPROOFING) *BRICKLAYERS LOCAL 3 (LOWELL)*	09/01/2014	$46.86	$10.18	$17.62	$0.00	$74.66
	03/01/2015	$47.42	$10.18	$17.62	$0.00	$75.22
	09/01/2015	$48.32	$10.18	$17.69	$0.00	$76.19
	03/01/2016	$48.89	$10.18	$17.69	$0.00	$76.76
	09/01/2016	$49.79	$10.18	$17.77	$0.00	$77.74
	03/01/2017	$50.36	$10.18	$17.77	$0.00	$78.31

Apprentice - *BRICK/PLASTER/CEMENT MASON - Local 3 Lowell*

Effective Date - 09/01/2014

Step	percent	Apprentice Base Wage	Health	Pension	Supplemental Unemployment	Total Rate
1	50	$23.43	$10.18	$17.62	$0.00	$51.23
2	60	$28.12	$10.18	$17.62	$0.00	$55.92
3	70	$32.80	$10.18	$17.62	$0.00	$60.60
4	80	$37.49	$10.18	$17.62	$0.00	$65.29
5	90	$42.17	$10.18	$17.62	$0.00	$69.97

Effective Date - 03/01/2015

Step	percent	Apprentice Base Wage	Health	Pension	Supplemental Unemployment	Total Rate
1	50	$23.71	$10.18	$17.62	$0.00	$51.51
2	60	$28.45	$10.18	$17.62	$0.00	$56.25
3	70	$33.19	$10.18	$17.62	$0.00	$60.99
4	80	$37.94	$10.18	$17.62	$0.00	$65.74
5	90	$42.68	$10.18	$17.62	$0.00	$70.48

Notes:

Apprentice to Journeyworker Ratio:1:5

Classification	Effective Date	Base Wage	Health	Pension	Supplemental Unemployment	Total Rate
BULLDOZER/GRADER/SCRAPER	06/01/2014	$41.10	$10.00	$14.20	$0.00	$65.30
OPERATING ENGINEERS LOCAL 4	12/01/2014	$42.09	$10.00	$14.20	$0.00	$66.29
	06/01/2015	$42.83	$10.00	$14.20	$0.00	$67.03
	12/01/2015	$44.07	$10.00	$14.20	$0.00	$68.27
	06/01/2016	$44.82	$10.00	$14.20	$0.00	$69.02
	12/01/2016	$46.05	$10.00	$14.20	$0.00	$70.25
	06/01/2017	$47.04	$10.00	$14.20	$0.00	$71.24
	12/01/2017	$48.03	$10.00	$14.20	$0.00	$72.23
For apprentice rates see "Apprentice- OPERATING ENGINEERS"						
CAISSON & UNDERPINNING BOTTOM MAN	06/01/2014	$35.20	$7.30	$12.90	$0.00	$55.40
LABORERS - FOUNDATION AND MARINE	12/01/2014	$35.95	$7.30	$12.90	$0.00	$56.15
	06/01/2015	$36.70	$7.30	$12.90	$0.00	$56.90
	12/01/2015	$37.45	$7.30	$12.90	$0.00	$57.65
	06/01/2016	$38.20	$7.30	$12.90	$0.00	$58.40
	12/01/2016	$39.20	$7.30	$12.90	$0.00	$59.40
For apprentice rates see "Apprentice- LABORER"						
CAISSON & UNDERPINNING LABORER	06/01/2014	$34.05	$7.30	$12.90	$0.00	$54.25
LABORERS - FOUNDATION AND MARINE	12/01/2014	$34.80	$7.30	$12.90	$0.00	$55.00
	06/01/2015	$35.55	$7.30	$12.90	$0.00	$55.75
	12/01/2015	$36.30	$7.30	$12.90	$0.00	$56.50
	06/01/2016	$37.05	$7.30	$12.90	$0.00	$57.25
	12/01/2016	$38.05	$7.30	$12.90	$0.00	$58.25
For apprentice rates see "Apprentice- LABORER"						
CAISSON & UNDERPINNING TOP MAN	06/01/2014	$34.05	$7.30	$12.90	$0.00	$54.25
LABORERS - FOUNDATION AND MARINE	12/01/2014	$34.80	$7.30	$12.90	$0.00	$55.00
	06/01/2015	$35.55	$7.30	$12.90	$0.00	$55.75
	12/01/2015	$36.30	$7.30	$12.90	$0.00	$56.50
	06/01/2016	$37.05	$7.30	$12.90	$0.00	$57.25
	12/01/2016	$38.05	$7.30	$12.90	$0.00	$58.25
For apprentice rates see "Apprentice- LABORER"						
CARBIDE CORE DRILL OPERATOR	06/01/2014	$30.60	$7.30	$12.10	$0.00	$50.00
LABORERS - ZONE 2	12/01/2014	$31.10	$7.30	$12.10	$0.00	$50.50
	06/01/2015	$31.60	$7.30	$12.10	$0.00	$51.00
	12/01/2015	$32.10	$7.30	$12.10	$0.00	$51.50
	06/01/2016	$32.60	$7.30	$12.10	$0.00	$52.00
	12/01/2016	$33.35	$7.30	$12.10	$0.00	$52.75
For apprentice rates see "Apprentice- LABORER"						
CARPENTER	09/01/2014	$35.35	$9.80	$16.11	$0.00	$61.26
CARPENTERS -ZONE 2 (Eastern Massachusetts)	03/01/2015	$36.12	$9.80	$16.11	$0.00	$62.03

Classification	Effective Date	Base Wage	Health	Pension	Supplemental Unemployment	Total Rate

Apprentice - *CARPENTER - Zone 2 Eastern MA*

Effective Date - 09/01/2014

Step	percent	Apprentice Base Wage	Health	Pension	Supplemental Unemployment	Total Rate
1	50	$17.68	$9.80	$1.57	$0.00	$29.05
2	60	$21.21	$9.80	$1.57	$0.00	$32.58
3	70	$24.75	$9.80	$11.40	$0.00	$45.95
4	75	$26.51	$9.80	$11.40	$0.00	$47.71
5	80	$28.28	$9.80	$12.97	$0.00	$51.05
6	80	$28.28	$9.80	$12.97	$0.00	$51.05
7	90	$31.82	$9.80	$14.54	$0.00	$56.16
8	90	$31.82	$9.80	$14.54	$0.00	$56.16

Effective Date - 03/01/2015

Step	percent	Apprentice Base Wage	Health	Pension	Supplemental Unemployment	Total Rate
1	50	$18.06	$9.80	$1.57	$0.00	$29.43
2	60	$21.67	$9.80	$1.57	$0.00	$33.04
3	70	$25.28	$9.80	$11.40	$0.00	$46.48
4	75	$27.09	$9.80	$11.40	$0.00	$48.29
5	80	$28.90	$9.80	$12.97	$0.00	$51.67
6	80	$28.90	$9.80	$12.97	$0.00	$51.67
7	90	$32.51	$9.80	$14.54	$0.00	$56.85
8	90	$32.51	$9.80	$14.54	$0.00	$56.85

Notes:

Apprentice to Journeyworker Ratio:1:5

CEMENT MASONRY/PLASTERING	07/01/2014	$40.12	$10.90	$18.71	$1.30	$71.03
BRICKLAYERS LOCAL 3 (LOWELL)	01/01/2015	$40.80	$10.90	$18.71	$1.30	$71.71
	07/01/2015	$41.63	$10.90	$18.71	$1.30	$72.54
	01/01/2016	$42.32	$10.90	$18.71	$1.30	$73.23

Classification	Effective Date	Base Wage	Health	Pension	Supplemental Unemployment	Total Rate

Apprentice - *CEMENT MASONRY/PLASTERING - Lowell*

Effective Date - 07/01/2014

Step	percent	Apprentice Base Wage	Health	Pension	Supplemental Unemployment	Total Rate
1	50	$20.06	$10.90	$12.21	$1.30	$44.47
2	60	$24.07	$10.90	$13.71	$1.30	$49.98
3	65	$26.08	$10.90	$14.71	$1.30	$52.99
4	70	$28.08	$10.90	$15.71	$1.30	$55.99
5	75	$30.09	$10.90	$16.71	$1.30	$59.00
6	80	$32.10	$10.90	$17.71	$1.30	$62.01
7	90	$36.11	$10.90	$18.71	$1.30	$67.02

Effective Date - 01/01/2015

Step	percent	Apprentice Base Wage	Health	Pension	Supplemental Unemployment	Total Rate
1	50	$20.40	$10.90	$12.21	$1.30	$44.81
2	60	$24.48	$10.90	$13.71	$1.30	$50.39
3	65	$26.52	$10.90	$14.71	$1.30	$53.43
4	70	$28.56	$10.90	$15.71	$1.30	$56.47
5	75	$30.60	$10.90	$16.71	$1.30	$59.51
6	80	$32.64	$10.90	$17.71	$1.30	$62.55
7	90	$36.72	$10.90	$18.71	$1.30	$67.63

Notes:

Steps 3,4 are 500 hrs. All other steps are 1,000 hrs.

Apprentice to Journeyworker Ratio:1:3

CHAIN SAW OPERATOR *LABORERS - ZONE 2*	06/01/2014	$30.60	$7.30	$12.10	$0.00	$50.00
	12/01/2014	$31.10	$7.30	$12.10	$0.00	$50.50
	06/01/2015	$31.60	$7.30	$12.10	$0.00	$51.00
	12/01/2015	$32.10	$7.30	$12.10	$0.00	$51.50
	06/01/2016	$32.60	$7.30	$12.10	$0.00	$52.00
	12/01/2016	$33.35	$7.30	$12.10	$0.00	$52.75

For apprentice rates see "Apprentice- LABORER"

CLAM SHELLS/SLURRY BUCKETS/HEADING MACHINES *OPERATING ENGINEERS LOCAL 4*	06/01/2014	$42.49	$10.00	$14.20	$0.00	$66.69
	12/01/2014	$43.49	$10.00	$14.20	$0.00	$67.69
	06/01/2015	$44.24	$10.00	$14.20	$0.00	$68.44
	12/01/2015	$45.49	$10.00	$14.20	$0.00	$69.69
	06/01/2016	$46.24	$10.00	$14.20	$0.00	$70.44
	12/01/2016	$47.49	$10.00	$14.20	$0.00	$71.69
	06/01/2017	$48.49	$10.00	$14.20	$0.00	$72.69
	12/01/2017	$49.49	$10.00	$14.20	$0.00	$73.69

For apprentice rates see "Apprentice- OPERATING ENGINEERS"

Classification	Effective Date	Base Wage	Health	Pension	Supplemental Unemployment	Total Rate
COMPRESSOR OPERATOR	06/01/2014	$28.80	$10.00	$14.20	$0.00	$53.00
OPERATING ENGINEERS LOCAL 4	12/01/2014	$29.50	$10.00	$14.20	$0.00	$53.70
	06/01/2015	$30.02	$10.00	$14.20	$0.00	$54.22
	12/01/2015	$30.89	$10.00	$14.20	$0.00	$55.09
	06/01/2016	$31.41	$10.00	$14.20	$0.00	$55.61
	12/01/2016	$32.28	$10.00	$14.20	$0.00	$56.48
	06/01/2017	$32.97	$10.00	$14.20	$0.00	$57.17
	12/01/2017	$33.66	$10.00	$14.20	$0.00	$57.86
For apprentice rates see "Apprentice- OPERATING ENGINEERS"						
DELEADER (BRIDGE)	07/01/2014	$46.76	$7.85	$16.10	$0.00	$70.71
PAINTERS LOCAL 35 - ZONE 2	01/01/2015	$47.66	$7.85	$16.10	$0.00	$71.61
	07/01/2015	$48.56	$7.85	$16.10	$0.00	$72.51
	01/01/2016	$49.51	$7.85	$16.10	$0.00	$73.46
	07/01/2016	$50.46	$7.85	$16.10	$0.00	$74.41
	01/01/2017	$51.41	$7.85	$16.10	$0.00	$75.36

Apprentice - *PAINTER Local 35 - BRIDGES/TANKS*

Effective Date - 07/01/2014

Step	percent	Apprentice Base Wage	Health	Pension	Supplemental Unemployment	Total Rate
1	50	$23.38	$7.85	$0.00	$0.00	$31.23
2	55	$25.72	$7.85	$3.66	$0.00	$37.23
3	60	$28.06	$7.85	$3.99	$0.00	$39.90
4	65	$30.39	$7.85	$4.32	$0.00	$42.56
5	70	$32.73	$7.85	$14.11	$0.00	$54.69
6	75	$35.07	$7.85	$14.44	$0.00	$57.36
7	80	$37.41	$7.85	$14.77	$0.00	$60.03
8	90	$42.08	$7.85	$15.44	$0.00	$65.37

Effective Date - 01/01/2015

Step	percent	Apprentice Base Wage	Health	Pension	Supplemental Unemployment	Total Rate
1	50	$23.83	$7.85	$0.00	$0.00	$31.68
2	55	$26.21	$7.85	$3.66	$0.00	$37.72
3	60	$28.60	$7.85	$3.99	$0.00	$40.44
4	65	$30.98	$7.85	$4.32	$0.00	$43.15
5	70	$33.36	$7.85	$14.11	$0.00	$55.32
6	75	$35.75	$7.85	$14.44	$0.00	$58.04
7	80	$38.13	$7.85	$14.77	$0.00	$60.75
8	90	$42.89	$7.85	$15.44	$0.00	$66.18

Notes:

Steps are 750 hrs.

Apprentice to Journeyworker Ratio:1:1

Classification	Effective Date	Base Wage	Health	Pension	Supplemental Unemployment	Total Rate
DEMO: ADZEMAN	06/01/2014	$34.25	$7.30	$12.70	$0.00	$54.25
LABORERS - ZONE 2	12/01/2014	$35.00	$7.30	$12.70	$0.00	$55.00
	06/01/2015	$35.75	$7.30	$12.70	$0.00	$55.75
	12/01/2015	$36.50	$7.30	$12.70	$0.00	$56.50
For apprentice rates see "Apprentice- LABORER"						
DEMO: BACKHOE/LOADER/HAMMER OPERATOR	06/01/2014	$35.25	$7.30	$12.70	$0.00	$55.25
LABORERS - ZONE 2	12/01/2014	$36.00	$7.30	$12.70	$0.00	$56.00
	06/01/2015	$36.75	$7.30	$12.70	$0.00	$56.75
	12/01/2015	$37.50	$7.30	$12.70	$0.00	$57.50
For apprentice rates see "Apprentice- LABORER"						
DEMO: BURNERS	06/01/2014	$35.00	$7.30	$12.70	$0.00	$55.00
LABORERS - ZONE 2	12/01/2014	$35.75	$7.30	$12.70	$0.00	$55.75
	06/01/2015	$36.50	$7.30	$12.70	$0.00	$56.50
	12/01/2015	$37.25	$7.30	$12.70	$0.00	$57.25
For apprentice rates see "Apprentice- LABORER"						
DEMO: CONCRETE CUTTER/SAWYER	06/01/2014	$35.25	$7.30	$12.70	$0.00	$55.25
LABORERS - ZONE 2	12/01/2014	$36.00	$7.30	$12.70	$0.00	$56.00
	06/01/2015	$36.75	$7.30	$12.70	$0.00	$56.75
	12/01/2015	$37.50	$7.30	$12.70	$0.00	$57.50
For apprentice rates see "Apprentice- LABORER"						
DEMO: JACKHAMMER OPERATOR	06/01/2014	$35.00	$7.30	$12.70	$0.00	$55.00
LABORERS - ZONE 2	12/01/2014	$35.75	$7.30	$12.70	$0.00	$55.75
	06/01/2015	$36.50	$7.30	$12.70	$0.00	$56.50
	12/01/2015	$37.25	$7.30	$12.70	$0.00	$57.25
For apprentice rates see "Apprentice- LABORER"						
DEMO: WRECKING LABORER	06/01/2014	$34.25	$7.30	$12.70	$0.00	$54.25
LABORERS - ZONE 2	12/01/2014	$35.00	$7.30	$12.70	$0.00	$55.00
	06/01/2015	$35.75	$7.30	$12.70	$0.00	$55.75
	12/01/2015	$36.50	$7.30	$12.70	$0.00	$56.50
For apprentice rates see "Apprentice- LABORER"						
DIRECTIONAL DRILL MACHINE OPERATOR	06/01/2014	$41.10	$10.00	$14.20	$0.00	$65.30
OPERATING ENGINEERS LOCAL 4	12/01/2014	$42.09	$10.00	$14.20	$0.00	$66.29
	06/01/2015	$42.83	$10.00	$14.20	$0.00	$67.03
	12/01/2015	$44.07	$10.00	$14.20	$0.00	$68.27
	06/01/2016	$44.82	$10.00	$14.20	$0.00	$69.02
	12/01/2016	$46.05	$10.00	$14.20	$0.00	$70.25
	06/01/2017	$47.04	$10.00	$14.20	$0.00	$71.24
	12/01/2017	$48.03	$10.00	$14.20	$0.00	$72.23
For apprentice rates see "Apprentice- OPERATING ENGINEERS"						
DIVER	08/01/2014	$58.24	$9.80	$18.17	$0.00	$86.21
PILE DRIVER LOCAL 56 (ZONE 1)	08/01/2015	$60.34	$9.80	$18.17	$0.00	$88.31
DIVER TENDER	08/01/2014	$41.60	$9.80	$18.17	$0.00	$69.57
PILE DRIVER LOCAL 56 (ZONE 1)	08/01/2015	$43.10	$9.80	$18.17	$0.00	$71.07
DIVER TENDER (EFFLUENT)	08/01/2014	$62.40	$9.80	$18.17	$0.00	$90.37
PILE DRIVER LOCAL 56 (ZONE 1)	08/01/2015	$64.65	$9.80	$18.17	$0.00	$92.62
DIVER/SLURRY (EFFLUENT)	08/01/2014	$87.36	$9.80	$18.17	$0.00	$115.33
PILE DRIVER LOCAL 56 (ZONE 1)	08/01/2015	$90.51	$9.80	$18.17	$0.00	$118.48

Classification	Effective Date	Base Wage	Health	Pension	Supplemental Unemployment	Total Rate
DRAWBRIDGE OPERATOR (Construction) *ELECTRICIANS LOCAL 103*	09/01/2014	$44.79	$13.00	$15.04	$0.00	$72.83
	03/01/2015	$45.17	$13.00	$15.40	$0.00	$73.57
	09/01/2015	$46.13	$13.00	$15.43	$0.00	$74.56
	03/01/2016	$47.08	$13.00	$15.46	$0.00	$75.54
For apprentice rates see "Apprentice- ELECTRICIAN"						
ELECTRICIAN *ELECTRICIANS LOCAL 103*	09/01/2014	$44.79	$13.00	$15.04	$0.00	$72.83
	03/01/2015	$45.17	$13.00	$15.40	$0.00	$73.57
	09/01/2015	$46.13	$13.00	$15.43	$0.00	$74.56
	03/01/2016	$47.08	$13.00	$15.46	$0.00	$75.54

Apprentice - *ELECTRICIAN - Local 103*

Effective Date - 09/01/2014

Step	percent	Apprentice Base Wage	Health	Pension	Supplemental Unemployment	Total Rate
1	40	$17.92	$13.00	$0.54	$0.00	$31.46
2	40	$17.92	$13.00	$0.54	$0.00	$31.46
3	45	$20.16	$13.00	$11.33	$0.00	$44.49
4	45	$20.16	$13.00	$11.33	$0.00	$44.49
5	50	$22.40	$13.00	$11.67	$0.00	$47.07
6	55	$24.63	$13.00	$12.01	$0.00	$49.64
7	60	$26.87	$13.00	$12.35	$0.00	$52.22
8	65	$29.11	$13.00	$12.68	$0.00	$54.79
9	70	$31.35	$13.00	$13.02	$0.00	$57.37
10	75	$33.59	$13.00	$13.36	$0.00	$59.95

Effective Date - 03/01/2015

Step	percent	Apprentice Base Wage	Health	Pension	Supplemental Unemployment	Total Rate
1	40	$18.07	$13.00	$0.54	$0.00	$31.61
2	40	$18.07	$13.00	$0.54	$0.00	$31.61
3	45	$20.33	$13.00	$11.63	$0.00	$44.96
4	45	$20.33	$13.00	$11.63	$0.00	$44.96
5	50	$22.59	$13.00	$11.97	$0.00	$47.56
6	55	$24.84	$13.00	$12.32	$0.00	$50.16
7	60	$27.10	$13.00	$12.66	$0.00	$52.76
8	65	$29.36	$13.00	$13.00	$0.00	$55.36
9	70	$31.62	$13.00	$13.34	$0.00	$57.96
10	75	$33.88	$13.00	$13.69	$0.00	$60.57

Notes: :

App Prior 1/1/03; 30/35/40/45/50/55/65/70/75/80

Apprentice to Journeyworker Ratio:2:3***

ELEVATOR CONSTRUCTOR *ELEVATOR CONSTRUCTORS LOCAL 4*	01/01/2012	$52.45	$8.78	$6.96	$0.00	$68.19

Classification	Effective Date	Base Wage	Health	Pension	Supplemental Unemployment	Total Rate

Apprentice - *ELEVATOR CONSTRUCTOR - Local 4*

Effective Date - 01/01/2012

Step	percent	Apprentice Base Wage	Health	Pension	Supplemental Unemployment	Total Rate
1	50	$26.23	$8.78	$0.00	$0.00	$35.01
2	55	$28.85	$8.78	$6.96	$0.00	$44.59
3	65	$34.09	$8.78	$6.96	$0.00	$49.83
4	70	$36.72	$8.78	$6.96	$0.00	$52.46
5	80	$41.96	$8.78	$6.96	$0.00	$57.70

Notes:
Steps 1-2 are 6 mos.; Steps 3-5 are 1 year

Apprentice to Journeyworker Ratio:1:1

ELEVATOR CONSTRUCTOR HELPER *ELEVATOR CONSTRUCTORS LOCAL 4*	01/01/2012	$38.59	$8.78	$6.96	$0.00	$54.33
For apprentice rates see "Apprentice - ELEVATOR CONSTRUCTOR"						
FENCE & GUARD RAIL ERECTOR *LABORERS - ZONE 2*	06/01/2014	$30.60	$7.30	$12.10	$0.00	$50.00
	12/01/2014	$31.10	$7.30	$12.10	$0.00	$50.50
	06/01/2015	$31.60	$7.30	$12.10	$0.00	$51.00
	12/01/2015	$32.10	$7.30	$12.10	$0.00	$51.50
	06/01/2016	$32.60	$7.30	$12.10	$0.00	$52.00
	12/01/2016	$33.35	$7.30	$12.10	$0.00	$52.75
For apprentice rates see "Apprentice- LABORER"						
FIELD ENG.INST.PERSON-BLDG,SITE,HVY/HWY *OPERATING ENGINEERS LOCAL 4*	05/01/2014	$38.87	$10.00	$14.18	$0.00	$63.05
For apprentice rates see "Apprentice- OPERATING ENGINEERS"						
FIELD ENG.PARTY CHIEF-BLDG,SITE,HVY/HWY *OPERATING ENGINEERS LOCAL 4*	05/01/2014	$40.29	$10.00	$14.18	$0.00	$64.47
For apprentice rates see "Apprentice- OPERATING ENGINEERS"						
FIELD ENG.ROD PERSON-BLDG,SITE,HVY/HWY *OPERATING ENGINEERS LOCAL 4*	05/01/2014	$20.92	$10.00	$14.18	$0.00	$45.10
For apprentice rates see "Apprentice- OPERATING ENGINEERS"						
FIRE ALARM INSTALLER *ELECTRICIANS LOCAL 103*	09/01/2014	$44.79	$13.00	$15.04	$0.00	$72.83
	03/01/2015	$45.17	$13.00	$15.40	$0.00	$73.57
	09/01/2015	$46.13	$13.00	$15.43	$0.00	$74.56
	03/01/2016	$47.08	$13.00	$15.46	$0.00	$75.54
For apprentice rates see "Apprentice- ELECTRICIAN"						
FIRE ALARM REPAIR / MAINTENANCE / COMMISSIONING *ELECTRICIANS LOCAL 103*	09/01/2014	$33.59	$13.00	$13.36	$0.00	$59.95
	03/01/2015	$33.88	$13.00	$13.70	$0.00	$60.58
	09/01/2015	$34.60	$13.00	$13.72	$0.00	$61.32
	03/01/2016	$35.31	$13.00	$13.74	$0.00	$62.05
For apprentice rates see "Apprentice- TELECOMMUNICATIONS TECHNICIAN"						

Classification	Effective Date	Base Wage	Health	Pension	Supplemental Unemployment	Total Rate
FIREMAN (ASST. ENGINEER) *OPERATING ENGINEERS LOCAL 4*	06/01/2014	$34.59	$10.00	$14.20	$0.00	$58.79
	12/01/2014	$35.43	$10.00	$14.20	$0.00	$59.63
	06/01/2015	$36.05	$10.00	$14.20	$0.00	$60.25
	12/01/2015	$37.10	$10.00	$14.20	$0.00	$61.30
	06/01/2016	$37.72	$10.00	$14.20	$0.00	$61.92
	12/01/2016	$38.76	$10.00	$14.20	$0.00	$62.96
	06/01/2017	$39.60	$10.00	$14.20	$0.00	$63.80
	12/01/2017	$40.43	$10.00	$14.20	$0.00	$64.63
For apprentice rates see "Apprentice- OPERATING ENGINEERS"						
FLAGGER & SIGNALER *LABORERS - ZONE 2*	06/01/2014	$20.50	$7.30	$12.10	$0.00	$39.90
	12/01/2014	$20.50	$7.30	$12.10	$0.00	$39.90
	06/01/2015	$20.50	$7.30	$12.10	$0.00	$39.90
	12/01/2015	$20.50	$7.30	$12.10	$0.00	$39.90
	06/01/2016	$20.50	$7.30	$12.10	$0.00	$39.90
	12/01/2016	$20.50	$7.30	$12.10	$0.00	$39.90
For apprentice rates see "Apprentice- LABORER"						
FLOORCOVERER *FLOORCOVERERS LOCAL 2168 ZONE I*	09/01/2014	$40.40	$9.80	$17.21	$0.00	$67.41

Apprentice - *FLOORCOVERER - Local 2168 Zone I*

Effective Date - 09/01/2014

Step	percent	Apprentice Base Wage	Health	Pension	Supplemental Unemployment	Total Rate
1	50	$20.20	$9.80	$1.79	$0.00	$31.79
2	55	$22.22	$9.80	$1.79	$0.00	$33.81
3	60	$24.24	$9.80	$11.84	$0.00	$45.88
4	65	$26.26	$9.80	$11.84	$0.00	$47.90
5	70	$28.28	$9.80	$13.63	$0.00	$51.71
6	75	$30.30	$9.80	$13.63	$0.00	$53.73
7	80	$32.32	$9.80	$15.42	$0.00	$57.54
8	85	$34.34	$9.80	$15.42	$0.00	$59.56

Notes:
Steps are 750 hrs.

Apprentice to Journeyworker Ratio:1:1

FORK LIFT/CHERRY PICKER *OPERATING ENGINEERS LOCAL 4*	06/01/2014	$41.49	$10.00	$14.20	$0.00	$65.69
	12/01/2014	$42.49	$10.00	$14.20	$0.00	$66.69
	06/01/2015	$43.24	$10.00	$14.20	$0.00	$67.44
	12/01/2015	$44.49	$10.00	$14.20	$0.00	$68.69
	06/01/2016	$45.24	$10.00	$14.20	$0.00	$69.44
	12/01/2016	$46.49	$10.00	$14.20	$0.00	$70.69
	06/01/2017	$47.49	$10.00	$14.20	$0.00	$71.69
	12/01/2017	$48.49	$10.00	$14.20	$0.00	$72.69
For apprentice rates see "Apprentice- OPERATING ENGINEERS"						

Classification	Effective Date	Base Wage	Health	Pension	Supplemental Unemployment	Total Rate
GENERATOR/LIGHTING PLANT/HEATERS *OPERATING ENGINEERS LOCAL 4*	06/01/2014	$28.80	$10.00	$14.20	$0.00	$53.00
	12/01/2014	$29.50	$10.00	$14.20	$0.00	$53.70
	06/01/2015	$30.02	$10.00	$14.20	$0.00	$54.22
	12/01/2015	$30.89	$10.00	$14.20	$0.00	$55.09
	06/01/2016	$31.41	$10.00	$14.20	$0.00	$55.61
	12/01/2016	$32.28	$10.00	$14.20	$0.00	$56.48
	06/01/2017	$32.97	$10.00	$14.20	$0.00	$57.17
	12/01/2017	$33.66	$10.00	$14.20	$0.00	$57.86
For apprentice rates see "Apprentice- OPERATING ENGINEERS"						
GLAZIER (GLASS PLANK/AIR BARRIER/INTERIOR SYSTEMS) *GLAZIERS LOCAL 35 (ZONE 2)*	07/01/2014	$36.26	$7.85	$16.10	$0.00	$60.21
	01/01/2015	$37.16	$7.85	$16.10	$0.00	$61.11
	07/01/2015	$38.06	$7.85	$16.10	$0.00	$62.01
	01/01/2016	$39.01	$7.85	$16.10	$0.00	$62.96
	07/01/2016	$39.96	$7.85	$16.10	$0.00	$63.91
	01/01/2017	$40.91	$7.85	$16.10	$0.00	$64.86

Apprentice - *GLAZIER - Local 35 Zone 2*

Effective Date - 07/01/2014

Step	percent	Apprentice Base Wage	Health	Pension	Snpplemental Unemployment	Total Rate
1	50	$18.13	$7.85	$0.00	$0.00	$25.98
2	55	$19.94	$7.85	$3.66	$0.00	$31.45
3	60	$21.76	$7.85	$3.99	$0.00	$33.60
4	65	$23.57	$7.85	$4.32	$0.00	$35.74
5	70	$25.38	$7.85	$14.11	$0.00	$47.34
6	75	$27.20	$7.85	$14.44	$0.00	$49.49
7	80	$29.01	$7.85	$14.77	$0.00	$51.63
8	90	$32.63	$7.85	$15.44	$0.00	$55.92

Effective Date - 01/01/2015

Step	percent	Apprentice Base Wage	Health	Pension	Supplemental Unemployment	Total Rate
1	50	$18.58	$7.85	$0.00	$0.00	$26.43
2	55	$20.44	$7.85	$3.66	$0.00	$31.95
3	60	$22.30	$7.85	$3.99	$0.00	$34.14
4	65	$24.15	$7.85	$4.32	$0.00	$36.32
5	70	$26.01	$7.85	$14.11	$0.00	$47.97
6	75	$27.87	$7.85	$14.44	$0.00	$50.16
7	80	$29.73	$7.85	$14.77	$0.00	$52.35
8	90	$33.44	$7.85	$15.44	$0.00	$56.73

Notes:

Steps are 750 hrs.

Apprentice to Journeyworker Ratio:1:1

Classification	Effective Date	Base Wage	Health	Pension	Supplemental Unemployment	Total Rate
HOISTING ENGINEER/CRANES/GRADALLS	06/01/2014	$41.49	$10.00	$14.20	$0.00	$65.69
OPERATING ENGINEERS LOCAL 4	12/01/2014	$42.49	$10.00	$14.20	$0.00	$66.69
	06/01/2015	$43.24	$10.00	$14.20	$0.00	$67.44
	12/01/2015	$44.49	$10.00	$14.20	$0.00	$68.69
	06/01/2016	$45.24	$10.00	$14.20	$0.00	$69.44
	12/01/2016	$46.49	$10.00	$14.20	$0.00	$70.69
	06/01/2017	$47.49	$10.00	$14.20	$0.00	$71.69
	12/01/2017	$48.49	$10.00	$14.20	$0.00	$72.69

Apprentice - *OPERATING ENGINEERS - Local 4*

Effective Date - 06/01/2014

Step	percent	Apprentice Base Wage	Health	Pension	Supplemental Unemployment	Total Rate
1	55	$22.82	$10.00	$0.00	$0.00	$32.82
2	60	$24.89	$10.00	$14.18	$0.00	$49.07
3	65	$26.97	$10.00	$14.18	$0.00	$51.15
4	70	$29.04	$10.00	$14.18	$0.00	$53.22
5	75	$31.12	$10.00	$14.18	$0.00	$55.30
6	80	$33.19	$10.00	$14.18	$0.00	$57.37
7	85	$35.27	$10.00	$14.18	$0.00	$59.45
8	90	$37.34	$10.00	$14.18	$0.00	$61.52

Effective Date - 12/01/2014

Step	percent	Apprentice Base Wage	Health	Pension	Supplemental Unemployment	Total Rate
1	55	$23.37	$10.00	$0.00	$0.00	$33.37
2	60	$25.49	$10.00	$14.18	$0.00	$49.67
3	65	$27.62	$10.00	$14.18	$0.00	$51.80
4	70	$29.74	$10.00	$14.18	$0.00	$53.92
5	75	$31.87	$10.00	$14.18	$0.00	$56.05
6	80	$33.99	$10.00	$14.18	$0.00	$58.17
7	85	$36.12	$10.00	$14.18	$0.00	$60.30
8	90	$38.24	$10.00	$14.18	$0.00	$62.42

Notes:

Apprentice to Journeyworker Ratio:1:6

HVAC (DUCTWORK)	08/01/2014	$42.79	$9.82	$20.54	$2.19	$75.34
SHEETMETAL WORKERS LOCAL 17 - A	02/01/2015	$43.69	$9.82	$20.54	$2.19	$76.24
	08/01/2015	$44.69	$9.82	$20.54	$2.19	$77.24
	02/01/2016	$45.69	$9.82	$20.54	$2.19	$78.24
	08/01/2016	$46.84	$9.82	$20.54	$2.19	$79.39
	02/01/2017	$47.94	$9.82	$20.54	$2.19	$80.49
	08/01/2017	$49.04	$9.82	$20.54	$2.19	$81.59
	02/01/2018	$50.19	$9.82	$20.54	$2.19	$82.74

For apprentice rates see "Apprentice- SHEET METAL WORKER"

Classification	Effective Date	Base Wage	Health	Pension	Supplemental Unemployment	Total Rate
HVAC (ELECTRICAL CONTROLS) *ELECTRICIANS LOCAL 103*	09/01/2014	$44.79	$13.00	$15.04	$0.00	$72.83
	03/01/2015	$45.17	$13.00	$15.40	$0.00	$73.57
	09/01/2015	$46.13	$13.00	$15.43	$0.00	$74.56
	03/01/2016	$47.08	$13.00	$15.46	$0.00	$75.54
For apprentice rates see "Apprentice- ELECTRICIAN"						
HVAC (TESTING AND BALANCING - AIR) *SHEETMETAL WORKERS LOCAL 17 - A*	08/01/2014	$42.79	$9.82	$20.54	$2.19	$75.34
	02/01/2015	$43.69	$9.82	$20.54	$2.19	$76.24
	08/01/2015	$44.69	$9.82	$20.54	$2.19	$77.24
	02/01/2016	$45.69	$9.82	$20.54	$2.19	$78.24
	08/01/2016	$46.84	$9.82	$20.54	$2.19	$79.39
	02/01/2017	$47.94	$9.82	$20.54	$2.19	$80.49
	08/01/2017	$49.04	$9.82	$20.54	$2.19	$81.59
	02/01/2018	$50.19	$9.82	$20.54	$2.19	$82.74
For apprentice rates see "Apprentice- SHEET METAL WORKER"						
HVAC (TESTING AND BALANCING -WATER) *PIPEFITTERS LOCAL 537*	09/01/2014	$48.69	$9.20	$16.64	$0.00	$74.53
	03/01/2015	$49.69	$9.20	$16.64	$0.00	$75.53
	09/01/2015	$50.69	$9.20	$16.64	$0.00	$76.53
	03/01/2016	$51.69	$9.20	$16.64	$0.00	$77.53
	09/01/2016	$52.69	$9.20	$16.64	$0.00	$78.53
	03/01/2017	$53.69	$9.20	$16.64	$0.00	$79.53
For apprentice rates see "Apprentice- PIPEFITTER" or "PLUMBER/PIPEFITTER"						
HVAC MECHANIC *PIPEFITTERS LOCAL 537*	09/01/2014	$48.69	$9.20	$16.64	$0.00	$74.53
	03/01/2015	$49.69	$9.20	$16.64	$0.00	$75.53
	09/01/2015	$50.69	$9.20	$16.64	$0.00	$76.53
	03/01/2016	$51.69	$9.20	$16.64	$0.00	$77.53
	09/01/2016	$52.69	$9.20	$16.64	$0.00	$78.53
	03/01/2017	$53.69	$9.20	$16.64	$0.00	$79.53
For apprentice rates see "Apprentice- PIPEFITTER" or "PLUMBER/PIPEFITTER"						
HYDRAULIC DRILLS *LABORERS - ZONE 2*	06/01/2014	$31.10	$7.30	$12.10	$0.00	$50.50
	12/01/2014	$31.60	$7.30	$12.10	$0.00	$51.00
	06/01/2015	$32.10	$7.30	$12.10	$0.00	$51.50
	12/01/2015	$32.60	$7.30	$12.10	$0.00	$52.00
	06/01/2016	$33.10	$7.30	$12.10	$0.00	$52.50
	12/01/2016	$33.85	$7.30	$12.10	$0.00	$53.25
For apprentice rates see "Apprentice- LABORER"						
INSULATOR (PIPES & TANKS) *HEAT & FROST INSULATORS LOCAL 6 (BOSTON)*	09/01/2014	$44.11	$10.95	$12.10	$0.00	$67.16

Classification	Effective Date	Base Wage	Health	Pension	Supplemental Unemployment	Total Rate

Apprentice - *ASBESTOS INSULATOR (Pipes & Tanks) - Local 6 Boston*

Effective Date - 09/01/2014

Step	percent	Apprentice Base Wage	Health	Pension	Supplemental Unemployment	Total Rate
1	50	$22.06	$10.95	$9.00	$0.00	$42.01
2	60	$26.47	$10.95	$9.62	$0.00	$47.04
3	70	$30.88	$10.95	$10.24	$0.00	$52.07
4	80	$35.29	$10.95	$10.86	$0.00	$57.10

Notes:
Steps are 1 year

Apprentice to Journeyworker Ratio:1:4

IRONWORKER/WELDER *IRONWORKERS LOCAL 7 (LAWRENCE AREA)*	03/16/2014	$36.78	$7.70	$19.25	$0.00	$63.73

Apprentice - *IRONWORKER - Local 7 Lawrence*

Effective Date - 03/16/2014

Step	percent	Apprentice Base Wage	Health	Pension	Supplemental Unemployment	Total Rate
1	60	$22.07	$7.70	$19.25	$0.00	$49.02
2	70	$25.75	$7.70	$19.25	$0.00	$52.70
3	75	$27.59	$7.70	$19.25	$0.00	$54.54
4	80	$29.42	$7.70	$19.25	$0.00	$56.37
5	85	$31.26	$7.70	$19.25	$0.00	$58.21
6	90	$33.10	$7.70	$19.25	$0.00	$60.05

Notes:
Structural 1:6; Ornamental 1:4

Apprentice to Journeyworker Ratio:

JACKHAMMER & PAVING BREAKER OPERATOR *LABORERS - ZONE 2*	06/01/2014	$30.60	$7.30	$12.10	$0.00	$50.00
	12/01/2014	$31.10	$7.30	$12.10	$0.00	$50.50
	06/01/2015	$31.60	$7.30	$12.10	$0.00	$51.00
	12/01/2015	$32.10	$7.30	$12.10	$0.00	$51.50
	06/01/2016	$32.60	$7.30	$12.10	$0.00	$52.00
	12/01/2016	$33.35	$7.30	$12.10	$0.00	$52.75
For apprentice rates see "Apprentice- LABORER"						
LABORER *LABORERS - ZONE 2*	06/01/2014	$30.35	$7.30	$12.10	$0.00	$49.75
	12/01/2014	$30.85	$7.30	$12.10	$0.00	$50.25
	06/01/2015	$31.35	$7.30	$12.10	$0.00	$50.75
	12/01/2015	$31.85	$7.30	$12.10	$0.00	$51.25
	06/01/2016	$32.35	$7.30	$12.10	$0.00	$51.75
	12/01/2016	$33.10	$7.30	$12.10	$0.00	$52.50

Classification	Effective Date	Base Wage	Health	Pension	Supplemental Unemployment	Total Rate

Apprentice - *LABORER - Zone 2*

Effective Date - 06/01/2014

Step	percent	Apprentice Base Wage	Health	Pension	Supplemental Unemployment	Total Rate
1	60	$18.21	$7.30	$12.10	$0.00	$37.61
2	70	$21.25	$7.30	$12.10	$0.00	$40.65
3	80	$24.28	$7.30	$12.10	$0.00	$43.68
4	90	$27.32	$7.30	$12.10	$0.00	$46.72

Effective Date - 12/01/2014

Step	percent	Apprentice Base Wage	Health	Pension	Supplemental Unemployment	Total Rate
1	60	$18.51	$7.30	$12.10	$0.00	$37.91
2	70	$21.60	$7.30	$12.10	$0.00	$41.00
3	80	$24.68	$7.30	$12.10	$0.00	$44.08
4	90	$27.77	$7.30	$12.10	$0.00	$47.17

Notes:

Apprentice to Journeyworker Ratio:1:5

LABORER: CARPENTER TENDER *LABORERS - ZONE 2*	06/01/2014	$30.35	$7.30	$12.10	$0.00	$49.75
	12/01/2014	$30.85	$7.30	$12.10	$0.00	$50.25
	06/01/2015	$31.35	$7.30	$12.10	$0.00	$50.75
	12/01/2015	$31.85	$7.30	$12.10	$0.00	$51.25
	06/01/2016	$32.35	$7.30	$12.10	$0.00	$51.75
	12/01/2016	$33.10	$7.30	$12.10	$0.00	$52.50
For apprentice rates see "Apprentice- LABORER"						
LABORER: CEMENT FINISHER TENDER *LABORERS - ZONE 2*	06/01/2014	$30.35	$7.30	$12.10	$0.00	$49.75
	12/01/2014	$30.85	$7.30	$12.10	$0.00	$50.25
	06/01/2015	$31.35	$7.30	$12.10	$0.00	$50.75
	12/01/2015	$31.85	$7.30	$12.10	$0.00	$51.25
	06/01/2016	$32.35	$7.30	$12.10	$0.00	$51.75
	12/01/2016	$33.10	$7.30	$12.10	$0.00	$52.50
For apprentice rates see "Apprentice- LABORER"						
LABORER: HAZARDOUS WASTE/ASBESTOS REMOVER *LABORERS - ZONE 2*	06/01/2014	$30.55	$7.30	$12.05	$0.00	$49.90
	12/01/2014	$31.05	$7.30	$12.05	$0.00	$50.40
	06/01/2015	$31.55	$7.30	$12.05	$0.00	$50.90
	12/01/2015	$32.05	$7.30	$12.05	$0.00	$51.40
For apprentice rates see "Apprentice- LABORER"						
LABORER: MASON TENDER *LABORERS - ZONE 2*	06/01/2014	$30.60	$7.30	$12.10	$0.00	$50.00
	12/01/2014	$31.10	$7.30	$12.10	$0.00	$50.50
	06/01/2015	$31.60	$7.30	$12.10	$0.00	$51.00
	12/01/2015	$32.10	$7.30	$12.10	$0.00	$51.50
	06/01/2016	$32.60	$7.30	$12.10	$0.00	$52.00
	12/01/2016	$33.35	$7.30	$12.10	$0.00	$52.75
For apprentice rates see "Apprentice- LABORER"						

Classification	Effective Date	Base Wage	Health	Pension	Supplemental Unemployment	Total Rate
LABORER: MULTI-TRADE TENDER *LABORERS - ZONE 2*	06/01/2014	$30.35	$7.30	$12.10	$0.00	$49.75
	12/01/2014	$30.85	$7.30	$12.10	$0.00	$50.25
	06/01/2015	$31.35	$7.30	$12.10	$0.00	$50.75
	12/01/2015	$31.85	$7.30	$12.10	$0.00	$51.25
	06/01/2016	$32.35	$7.30	$12.10	$0.00	$51.75
	12/01/2016	$33.10	$7.30	$12.10	$0.00	$52.50
For apprentice rates see "Apprentice- LABORER"						
LABORER: TREE REMOVER *LABORERS - ZONE 2*	06/01/2014	$30.35	$7.30	$12.10	$0.00	$49.75
	12/01/2014	$30.85	$7.30	$12.10	$0.00	$50.25
	06/01/2015	$31.35	$7.30	$12.10	$0.00	$50.75
	12/01/2015	$31.85	$7.30	$12.10	$0.00	$51.25
	06/01/2016	$32.35	$7.30	$12.10	$0.00	$51.75
	12/01/2016	$33.10	$7.30	$12.10	$0.00	$52.50
This classification applies to all tree work associated with the removal of standing trees, and trimming and removal of branches and limbs when the work is not done for a utility company for the purpose of operation, maintenance or repair of utility company equipment. For apprentice rates see "Apprentice- LABORER"						
LASER BEAM OPERATOR *LABORERS - ZONE 2*	06/01/2014	$30.60	$7.30	$12.10	$0.00	$50.00
	12/01/2014	$31.10	$7.30	$12.10	$0.00	$50.50
	06/01/2015	$31.60	$7.30	$12.10	$0.00	$51.00
	12/01/2015	$32.10	$7.30	$12.10	$0.00	$51.50
	06/01/2016	$32.60	$7.30	$12.10	$0.00	$52.00
	12/01/2016	$33.35	$7.30	$12.10	$0.00	$52.75
For apprentice rates see "Apprentice- LABORER"						
MARBLE & TILE FINISHERS *BRICKLAYERS LOCAL 3 - MARBLE & TILE*	08/01/2014	$37.37	$10.18	$16.90	$0.00	$64.45
	02/01/2015	$37.82	$10.18	$16.90	$0.00	$64.90
	08/01/2015	$38.53	$10.18	$16.97	$0.00	$65.68
	02/01/2016	$38.98	$10.18	$16.97	$0.00	$66.13
	08/01/2016	$39.68	$10.18	$17.05	$0.00	$66.91
	02/01/2017	$40.14	$10.18	$17.05	$0.00	$67.37

Classification	Effective Date	Base Wage	Health	Pension	Supplemental Unemployment	Total Rate

Apprentice - *MARBLE & TILE FINISHER - Local 3 Marble & Tile*

Effective Date - 08/01/2014

Step	percent	Apprentice Base Wage	Health	Pension	Supplemental Unemployment	Total Rate
1	50	$18.69	$10.18	$16.90	$0.00	$45.77
2	60	$22.42	$10.18	$16.90	$0.00	$49.50
3	70	$26.16	$10.18	$16.90	$0.00	$53.24
4	80	$29.90	$10.18	$16.90	$0.00	$56.98
5	90	$33.63	$10.18	$16.90	$0.00	$60.71

Effective Date - 02/01/2015

Step	percent	Apprentice Base Wage	Health	Pension	Supplemental Unemployment	Total Rate
1	50	$18.91	$10.18	$16.90	$0.00	$45.99
2	60	$22.69	$10.18	$16.90	$0.00	$49.77
3	70	$26.47	$10.18	$16.90	$0.00	$53.55
4	80	$30.26	$10.18	$16.90	$0.00	$57.34
5	90	$34.04	$10.18	$16.90	$0.00	$61.12

Notes:

Apprentice to Journeyworker Ratio:1:3

MARBLE MASONS,TILELAYERS & TERRAZZO MECH *BRICKLAYERS LOCAL 3 - MARBLE & TILE*	08/01/2014	$49.00	$10.18	$18.22	$0.00	$77.40
	02/01/2015	$49.56	$10.18	$18.22	$0.00	$77.96
	08/01/2015	$50.46	$10.18	$18.29	$0.00	$78.93
	02/01/2016	$51.03	$10.18	$18.29	$0.00	$79.50
	08/01/2016	$51.93	$10.18	$18.37	$0.00	$80.48
	02/01/2017	$52.50	$10.18	$18.37	$0.00	$81.05

Classification	Effective Date	Base Wage	Health	Pension	Supplemental Unemployment	Total Rate

Apprentice - *MARBLE-TILE-TERRAZZO MECHANIC - Local 3 Marble & Tile*

Effective Date - 08/01/2014

Step	percent	Apprentice Base Wage	Health	Pension	Supplemental Unemployment	Total Rate
1	50	$24.50	$10.18	$18.22	$0.00	$52.90
2	60	$29.40	$10.18	$18.22	$0.00	$57.80
3	70	$34.30	$10.18	$18.22	$0.00	$62.70
4	80	$39.20	$10.18	$18.22	$0.00	$67.60
5	90	$44.10	$10.18	$18.22	$0.00	$72.50

Effective Date - 02/01/2015

Step	percent	Apprentice Base Wage	Health	Pension	Supplemental Unemployment	Total Rate
1	50	$24.78	$10.18	$18.22	$0.00	$53.18
2	60	$29.74	$10.18	$18.22	$0.00	$58.14
3	70	$34.69	$10.18	$18.22	$0.00	$63.09
4	80	$39.65	$10.18	$18.22	$0.00	$68.05
5	90	$44.60	$10.18	$18.22	$0.00	$73.00

Notes:

Apprentice to Journeyworker Ratio:1:5

MECH. SWEEPER OPERATOR (ON CONST. SITES) *OPERATING ENGINEERS LOCAL 4*	06/01/2014	$41.10	$10.00	$14.20	$0.00	$65.30
	12/01/2014	$42.09	$10.00	$14.20	$0.00	$66.29
	06/01/2015	$42.83	$10.00	$14.20	$0.00	$67.03
	12/01/2015	$44.07	$10.00	$14.20	$0.00	$68.27
	06/01/2016	$44.82	$10.00	$14.20	$0.00	$69.02
	12/01/2016	$46.05	$10.00	$14.20	$0.00	$70.25
	06/01/2017	$47.04	$10.00	$14.20	$0.00	$71.24
	12/01/2017	$48.03	$10.00	$14.20	$0.00	$72.23
For apprentice rates see "Apprentice- OPERATING ENGINEERS"						
MECHANICS MAINTENANCE *OPERATING ENGINEERS LOCAL 4*	06/01/2014	$41.10	$10.00	$14.20	$0.00	$65.30
	12/01/2014	$42.09	$10.00	$14.20	$0.00	$66.29
	06/01/2015	$42.83	$10.00	$14.20	$0.00	$67.03
	12/01/2015	$44.07	$10.00	$14.20	$0.00	$68.27
	06/01/2016	$44.82	$10.00	$14.20	$0.00	$69.02
	12/01/2016	$46.05	$10.00	$14.20	$0.00	$70.25
	06/01/2017	$47.04	$10.00	$14.20	$0.00	$71.24
	12/01/2017	$48.03	$10.00	$14.20	$0.00	$72.23
For apprentice rates see "Apprentice- OPERATING ENGINEERS"						
MILLWRIGHT (Zone 2) *MILLWRIGHTS LOCAL 1121 - Zone 2*	04/01/2014	$33.16	$9.80	$16.21	$0.00	$59.17
	10/01/2014	$33.92	$9.80	$16.21	$0.00	$59.93
	04/01/2015	$34.69	$9.80	$16.21	$0.00	$60.70

Classification	Effective Date	Base Wage	Health	Pension	Supplemental Unemployment	Total Rate

Apprentice - *MILLWRIGHT - Local 1121 Zone 2*

Effective Date - 04/01/2014

Step	percent	Apprentice Base Wage	Health	Pension	Supplemental Unemployment	Total Rate
1	55	$18.24	$9.80	$4.48	$0.00	$32.52
2	65	$21.55	$9.80	$13.36	$0.00	$44.71
3	75	$24.87	$9.80	$14.18	$0.00	$48.85
4	85	$28.19	$9.80	$14.99	$0.00	$52.98

Effective Date - 10/01/2014

Step	percent	Apprentice Base Wage	Health	Pension	Supplemental Unemployment	Total Rate
1	55	$18.66	$9.80	$4.48	$0.00	$32.94
2	65	$22.05	$9.80	$13.36	$0.00	$45.21
3	75	$25.44	$9.80	$14.18	$0.00	$49.42
4	85	$28.83	$9.80	$14.99	$0.00	$53.62

Notes:

Steps are 2,000 hours

Apprentice to Journeyworker Ratio:1:5

MORTAR MIXER *LABORERS - ZONE 2*	06/01/2014	$30.60	$7.30	$12.10	$0.00	$50.00
	12/01/2014	$31.10	$7.30	$12.10	$0.00	$50.50
	06/01/2015	$31.60	$7.30	$12.10	$0.00	$51.00
	12/01/2015	$32.10	$7.30	$12.10	$0.00	$51.50
	06/01/2016	$32.60	$7.30	$12.10	$0.00	$52.00
	12/01/2016	$33.35	$7.30	$12.10	$0.00	$52.75
For apprentice rates see "Apprentice- LABORER"						
OILER (OTHER THAN TRUCK CRANES,GRADALLS) *OPERATING ENGINEERS LOCAL 4*	06/01/2014	$21.48	$10.00	$14.20	$0.00	$45.68
	12/01/2014	$22.00	$10.00	$14.20	$0.00	$46.20
	06/01/2015	$22.38	$10.00	$14.20	$0.00	$46.58
	12/01/2015	$23.03	$10.00	$14.20	$0.00	$47.23
	06/01/2016	$23.42	$10.00	$14.20	$0.00	$47.62
	12/01/2016	$24.07	$10.00	$14.20	$0.00	$48.27
	06/01/2017	$24.58	$10.00	$14.20	$0.00	$48.78
	12/01/2017	$25.10	$10.00	$14.20	$0.00	$49.30
For apprentice rates see "Apprentice- OPERATING ENGINEERS"						
OILER (TRUCK CRANES, GRADALLS) *OPERATING ENGINEERS LOCAL 4*	06/01/2014	$25.03	$10.00	$14.20	$0.00	$49.23
	12/01/2014	$25.64	$10.00	$14.20	$0.00	$49.84
	06/01/2015	$26.09	$10.00	$14.20	$0.00	$50.29
	12/01/2015	$26.84	$10.00	$14.20	$0.00	$51.04
	06/01/2016	$27.30	$10.00	$14.20	$0.00	$51.50
	12/01/2016	$28.05	$10.00	$14.20	$0.00	$52.25
	06/01/2017	$28.65	$10.00	$14.20	$0.00	$52.85
	12/01/2017	$29.26	$10.00	$14.20	$0.00	$53.46
For apprentice rates see "Apprentice- OPERATING ENGINEERS"						

Classification	Effective Date	Base Wage	Health	Pension	Supplemental Unemployment	Total Rate
OTHER POWER DRIVEN EQUIPMENT - CLASS II *OPERATING ENGINEERS LOCAL 4*	06/01/2014	$41.10	$10.00	$14.20	$0.00	$65.30
	12/01/2014	$42.09	$10.00	$14.20	$0.00	$66.29
	06/01/2015	$42.83	$10.00	$14.20	$0.00	$67.03
	12/01/2015	$44.07	$10.00	$14.20	$0.00	$68.27
	06/01/2016	$44.82	$10.00	$14.20	$0.00	$69.02
	12/01/2016	$46.05	$10.00	$14.20	$0.00	$70.25
	06/01/2017	$47.04	$10.00	$14.20	$0.00	$71.24
	12/01/2017	$48.03	$10.00	$14.20	$0.00	$72.23
For apprentice rates see "Apprentice- OPERATING ENGINEERS"						
PAINTER (BRIDGES/TANKS) *PAINTERS LOCAL 35 - ZONE 2*	07/01/2014	$46.76	$7.85	$16.10	$0.00	$70.71
	01/01/2015	$47.66	$7.85	$16.10	$0.00	$71.61
	07/01/2015	$48.56	$7.85	$16.10	$0.00	$72.51
	01/01/2016	$49.51	$7.85	$16.10	$0.00	$73.46
	07/01/2016	$50.46	$7.85	$16.10	$0.00	$74.41
	01/01/2017	$51.41	$7.85	$16.10	$0.00	$75.36

Apprentice - *PAINTER Local 35 - BRIDGES/TANKS*

Effective Date - 07/01/2014

Step	percent	Apprentice Base Wage	Health	Pension	Supplemental Unemployment	Total Rate
1	50	$23.38	$7.85	$0.00	$0.00	$31.23
2	55	$25.72	$7.85	$3.66	$0.00	$37.23
3	60	$28.06	$7.85	$3.99	$0.00	$39.90
4	65	$30.39	$7.85	$4.32	$0.00	$42.56
5	70	$32.73	$7.85	$14.11	$0.00	$54.69
6	75	$35.07	$7.85	$14.44	$0.00	$57.36
7	80	$37.41	$7.85	$14.77	$0.00	$60.03
8	90	$42.08	$7.85	$15.44	$0.00	$65.37

Effective Date - 01/01/2015

Step	percent	Apprentice Base Wage	Health	Pension	Supplemental Unemployment	Total Rate
1	50	$23.83	$7.85	$0.00	$0.00	$31.68
2	55	$26.21	$7.85	$3.66	$0.00	$37.72
3	60	$28.60	$7.85	$3.99	$0.00	$40.44
4	65	$30.98	$7.85	$4.32	$0.00	$43.15
5	70	$33.36	$7.85	$14.11	$0.00	$55.32
6	75	$35.75	$7.85	$14.44	$0.00	$58.04
7	80	$38.13	$7.85	$14.77	$0.00	$60.75
8	90	$42.89	$7.85	$15.44	$0.00	$66.18

Notes:

Steps are 750 hrs.

Apprentice to Journeyworker Ratio:1:1

Classification	Effective Date	Base Wage	Health	Pension	Supplemental Unemployment	Total Rate
PAINTER (SPRAY OR SANDBLAST, NEW) *	07/01/2014	$37.66	$7.85	$16.10	$0.00	$61.61
* If 30% or more of surfaces to be painted are new construction, NEW paint rate shall be used. *PAINTERS LOCAL 35 - ZONE 2*	01/01/2015	$38.56	$7.85	$16.10	$0.00	$62.51
	07/01/2015	$39.46	$7.85	$16.10	$0.00	$63.41
	01/01/2016	$40.41	$7.85	$16.10	$0.00	$64.36
	07/01/2016	$41.36	$7.85	$16.10	$0.00	$65.31
	01/01/2017	$42.31	$7.85	$16.10	$0.00	$66.26

Apprentice - *PAINTER Local 35 Zone 2 - Spray/Sandblast - New*

Effective Date - 07/01/2014

Step	percent	Apprentice Base Wage	Health	Pension	Supplemental Unemployment	Total Rate
1	50	$18.83	$7.85	$0.00	$0.00	$26.68
2	55	$20.71	$7.85	$3.66	$0.00	$32.22
3	60	$22.60	$7.85	$3.99	$0.00	$34.44
4	65	$24.48	$7.85	$4.32	$0.00	$36.65
5	70	$26.36	$7.85	$14.11	$0.00	$48.32
6	75	$28.25	$7.85	$14.44	$0.00	$50.54
7	80	$30.13	$7.85	$14.77	$0.00	$52.75
8	90	$33.89	$7.85	$15.44	$0.00	$57.18

Effective Date - 01/01/2015

Step	percent	Apprentice Base Wage	Health	Pension	Supplemental Unemployment	Total Rate
1	50	$19.28	$7.85	$0.00	$0.00	$27.13
2	55	$21.21	$7.85	$3.66	$0.00	$32.72
3	60	$23.14	$7.85	$3.99	$0.00	$34.98
4	65	$25.06	$7.85	$4.32	$0.00	$37.23
5	70	$26.99	$7.85	$14.11	$0.00	$48.95
6	75	$28.92	$7.85	$14.44	$0.00	$51.21
7	80	$30.85	$7.85	$14.77	$0.00	$53.47
8	90	$34.70	$7.85	$15.44	$0.00	$57.99

Notes:

Steps are 750 hrs.

Apprentice to Journeyworker Ratio:1:1

PAINTER (SPRAY OR SANDBLAST, REPAINT) *PAINTERS LOCAL 35 - ZONE 2*	07/01/2014	$35.72	$7.85	$16.10	$0.00	$59.67
	01/01/2015	$36.62	$7.85	$16.10	$0.00	$60.57
	07/01/2015	$37.52	$7.85	$16.10	$0.00	$61.47
	01/01/2016	$38.47	$7.85	$16.10	$0.00	$62.42
	07/01/2016	$39.42	$7.85	$16.10	$0.00	$63.37
	01/01/2017	$40.37	$7.85	$16.10	$0.00	$64.32

Classification	Effective Date	Base Wage	Health	Pension	Supplemental Unemployment	Total Rate

Apprentice - *PAINTER Local 35 Zone 2 - Spray/Sandblast - Repaint*

Effective Date - 07/01/2014

Step	percent	Apprentice Base Wage	Health	Pension	Supplemental Unemployment	Total Rate
1	50	$17.86	$7.85	$0.00	$0.00	$25.71
2	55	$19.65	$7.85	$3.66	$0.00	$31.16
3	60	$21.43	$7.85	$3.99	$0.00	$33.27
4	65	$23.22	$7.85	$4.32	$0.00	$35.39
5	70	$25.00	$7.85	$14.11	$0.00	$46.96
6	75	$26.79	$7.85	$14.44	$0.00	$49.08
7	80	$28.58	$7.85	$14.77	$0.00	$51.20
8	90	$32.15	$7.85	$15.44	$0.00	$55.44

Effective Date - 01/01/2015

Step	percent	Apprentice Base Wage	Health	Pension	Supplemental Unemployment	Total Rate
1	50	$18.31	$7.85	$0.00	$0.00	$26.16
2	55	$20.14	$7.85	$3.66	$0.00	$31.65
3	60	$21.97	$7.85	$3.99	$0.00	$33.81
4	65	$23.80	$7.85	$4.32	$0.00	$35.97
5	70	$25.63	$7.85	$14.11	$0.00	$47.59
6	75	$27.47	$7.85	$14.44	$0.00	$49.76
7	80	$29.30	$7.85	$14.77	$0.00	$51.92
8	90	$32.96	$7.85	$15.44	$0.00	$56.25

Notes:
Steps are 750 hrs.

Apprentice to Journeyworker Ratio:1:1

PAINTER (TRAFFIC MARKINGS) *LABORERS - ZONE 2*	06/01/2014	$30.35	$7.30	$12.10	$0.00	$49.75
	12/01/2014	$30.85	$7.30	$12.10	$0.00	$50.25
	06/01/2015	$31.35	$7.30	$12.10	$0.00	$50.75
	12/01/2015	$31.85	$7.30	$12.10	$0.00	$51.25
	06/01/2016	$32.35	$7.30	$12.10	$0.00	$51.75
	12/01/2016	$33.10	$7.30	$12.10	$0.00	$52.50
For Apprentice rates see "Apprentice- LABORER"						
PAINTER / TAPER (BRUSH, NEW) * * If 30% or more of surfaces to be painted are new construction, NEW paint rate shall be used.*PAINTERS LOCAL 35 - ZONE 2*	07/01/2014	$36.26	$7.85	$16.10	$0.00	$60.21
	01/01/2015	$37.16	$7.85	$16.10	$0.00	$61.11
	07/01/2015	$38.06	$7.85	$16.10	$0.00	$62.01
	01/01/2016	$39.01	$7.85	$16.10	$0.00	$62.96
	07/01/2016	$39.96	$7.85	$16.10	$0.00	$63.91
	01/01/2017	$40.91	$7.85	$16.10	$0.00	$64.86

Classification	Effective Date	Base Wage	Health	Pension	Supplemental Unemployment	Total Rate

Apprentice - *PAINTER - Local 35 Zone 2 - BRUSH NEW*

Effective Date - 07/01/2014

Step	percent	Apprentice Base Wage	Health	Pension	Supplemental Unemployment	Total Rate
1	50	$18.13	$7.85	$0.00	$0.00	$25.98
2	55	$19.94	$7.85	$3.66	$0.00	$31.45
3	60	$21.76	$7.85	$3.99	$0.00	$33.60
4	65	$23.57	$7.85	$4.32	$0.00	$35.74
5	70	$25.38	$7.85	$14.11	$0.00	$47.34
6	75	$27.20	$7.85	$14.44	$0.00	$49.49
7	80	$29.01	$7.85	$14.77	$0.00	$51.63
8	90	$32.63	$7.85	$15.44	$0.00	$55.92

Effective Date - 01/01/2015

Step	percent	Apprentice Base Wage	Health	Pension	Supplemental Unemployment	Total Rate
1	50	$18.58	$7.85	$0.00	$0.00	$26.43
2	55	$20.44	$7.85	$3.66	$0.00	$31.95
3	60	$22.30	$7.85	$3.99	$0.00	$34.14
4	65	$24.15	$7.85	$4.32	$0.00	$36.32
5	70	$26.01	$7.85	$14.11	$0.00	$47.97
6	75	$27.87	$7.85	$14.44	$0.00	$50.16
7	80	$29.73	$7.85	$14.77	$0.00	$52.35
8	90	$33.44	$7.85	$15.44	$0.00	$56.73

Notes:
Steps are 750 hrs.

Apprentice to Journeyworker Ratio:1:1

PAINTER / TAPER (BRUSH, REPAINT) *PAINTERS LOCAL 35 - ZONE 2*	07/01/2014	$34.32	$7.85	$16.10	$0.00	$58.27
	01/01/2015	$35.22	$7.85	$16.10	$0.00	$59.17
	07/01/2015	$36.12	$7.85	$16.10	$0.00	$60.07
	01/01/2016	$37.07	$7.85	$16.10	$0.00	$61.02
	07/01/2016	$38.02	$7.85	$16.10	$0.00	$61.97
	01/01/2017	$38.97	$7.85	$16.10	$0.00	$62.92

Classification	Effective Date	Base Wage	Health	Pension	Supplemental Unemployment	Total Rate

Apprentice - *PAINTER Local 35 Zone 2 - BRUSH REPAINT*

Effective Date - 07/01/2014

Step	percent	Apprentice Base Wage	Health	Pension	Supplemental Unemployment	Total Rate
1	50	$17.16	$7.85	$0.00	$0.00	$25.01
2	55	$18.88	$7.85	$3.66	$0.00	$30.39
3	60	$20.59	$7.85	$3.99	$0.00	$32.43
4	65	$22.31	$7.85	$4.32	$0.00	$34.48
5	70	$24.02	$7.85	$14.11	$0.00	$45.98
6	75	$25.74	$7.85	$14.44	$0.00	$48.03
7	80	$27.46	$7.85	$14.77	$0.00	$50.08
8	90	$30.89	$7.85	$15.44	$0.00	$54.18

Effective Date - 01/01/2015

Step	percent	Apprentice Base Wage	Health	Pension	Supplemental Unemployment	Total Rate
1	50	$17.61	$7.85	$0.00	$0.00	$25.46
2	55	$19.37	$7.85	$3.66	$0.00	$30.88
3	60	$21.13	$7.85	$3.99	$0.00	$32.97
4	65	$22.89	$7.85	$4.32	$0.00	$35.06
5	70	$24.65	$7.85	$14.11	$0.00	$46.61
6	75	$26.42	$7.85	$14.44	$0.00	$48.71
7	80	$28.18	$7.85	$14.77	$0.00	$50.80
8	90	$31.70	$7.85	$15.44	$0.00	$54.99

Notes:
Steps are 750 hrs.

Apprentice to Journeyworker Ratio:1:1

PANEL & PICKUP TRUCKS DRIVER *TEAMSTERS JOINT COUNCIL NO. 10 ZONE B*	12/01/2012	$30.28	$9.07	$8.00	$0.00	$47.35
PIER AND DOCK CONSTRUCTOR (UNDERPINNING AND DECK) *PILE DRIVER LOCAL 56 (ZONE 1)*	08/01/2014	$41.60	$9.80	$18.17	$0.00	$69.57
	08/01/2015	$43.10	$9.80	$18.17	$0.00	$71.07
PILE DRIVER *PILE DRIVER LOCAL 56 (ZONE 1)*	08/01/2014	$41.60	$9.80	$18.17	$0.00	$69.57
	08/01/2015	$43.10	$9.80	$18.17	$0.00	$71.07

Classification	Effective Date	Base Wage	Health	Pension	Supplemental Unemployment	Total Rate

Apprentice - *PILE DRIVER - Local 56 Zone 1*

Effective Date - 08/01/2014

Step	percent	Apprentice Base Wage	Health	Pension	Supplemental Unemployment	Total Rate
1	50	$20.80	$9.80	$18.17	$0.00	$48.77
2	60	$24.96	$9.80	$18.17	$0.00	$52.93
3	70	$29.12	$9.80	$18.17	$0.00	$57.09
4	75	$31.20	$9.80	$18.17	$0.00	$59.17
5	80	$33.28	$9.80	$18.17	$0.00	$61.25
6	80	$33.28	$9.80	$18.17	$0.00	$61.25
7	90	$37.44	$9.80	$18.17	$0.00	$65.41
8	90	$37.44	$9.80	$18.17	$0.00	$65.41

Effective Date - 08/01/2015

Step	percent	Apprentice Base Wage	Health	Pension	Supplemental Unemployment	Total Rate
1	50	$21.55	$9.80	$18.17	$0.00	$49.52
2	60	$25.86	$9.80	$18.17	$0.00	$53.83
3	70	$30.17	$9.80	$18.17	$0.00	$58.14
4	75	$32.33	$9.80	$18.17	$0.00	$60.30
5	80	$34.48	$9.80	$18.17	$0.00	$62.45
6	80	$34.48	$9.80	$18.17	$0.00	$62.45
7	90	$38.79	$9.80	$18.17	$0.00	$66.76
8	90	$38.79	$9.80	$18.17	$0.00	$66.76

Notes:

Apprentice to Journeyworker Ratio:1:3

PIPEFITTER & STEAMFITTER *PIPEFITTERS LOCAL 537*	09/01/2014	$48.69	$9.20	$16.64	$0.00	$74.53
	03/01/2015	$49.69	$9.20	$16.64	$0.00	$75.53
	09/01/2015	$50.69	$9.20	$16.64	$0.00	$76.53
	03/01/2016	$51.69	$9.20	$16.64	$0.00	$77.53
	09/01/2016	$52.69	$9.20	$16.64	$0.00	$78.53
	03/01/2017	$53.69	$9.20	$16.64	$0.00	$79.53

Classification	Effective Date	Base Wage	Health	Pension	Supplemental Unemployment	Total Rate

Apprentice - *PIPEFITTER - Local 537*

Effective Date - 09/01/2014

Step	percent	Apprentice Base Wage	Health	Pension	Supplemental Unemployment	Total Rate
1	40	$19.48	$9.20	$7.50	$0.00	$36.18
2	45	$21.91	$9.20	$16.64	$0.00	$47.75
3	60	$29.21	$9.20	$16.64	$0.00	$55.05
4	70	$34.08	$9.20	$16.64	$0.00	$59.92
5	80	$38.95	$9.20	$16.64	$0.00	$64.79

Effective Date - 03/01/2015

Step	percent	Apprentice Base Wage	Health	Pension	Supplemental Unemployment	Total Rate
1	40	$19.88	$9.20	$7.50	$0.00	$36.58
2	45	$22.36	$9.20	$16.64	$0.00	$48.20
3	60	$29.81	$9.20	$16.64	$0.00	$55.65
4	70	$34.78	$9.20	$16.64	$0.00	$60.62
5	80	$39.75	$9.20	$16.64	$0.00	$65.59

Notes:

** 1:3; 3:15; 1:10 thereafter / Steps are 1 yr.

Refrig/AC Mechanic **1:1;1:2;2:4;3:6;4:8;5:10;6:12;7:14;8:17;9:20;10:23(Max)

Apprentice to Journeyworker Ratio:**

PIPELAYER *LABORERS - ZONE 2*	06/01/2014	$30.60	$7.30	$12.10	$0.00	$50.00
	12/01/2014	$31.10	$7.30	$12.10	$0.00	$50.50
	06/01/2015	$31.60	$7.30	$12.10	$0.00	$51.00
	12/01/2015	$32.10	$7.30	$12.10	$0.00	$51.50
	06/01/2016	$32.60	$7.30	$12.10	$0.00	$52.00
	12/01/2016	$33.35	$7.30	$12.10	$0.00	$52.75
For apprentice rates see "Apprentice- LABORER"						
PLUMBERS & GASFITTERS *PLUMBERS & GASFITTERS LOCAL 12*	09/01/2014	$49.66	$10.32	$14.54	$0.00	$74.52
	03/01/2015	$50.66	$10.32	$14.54	$0.00	$75.52
	09/01/2015	$51.66	$10.32	$14.54	$0.00	$76.52
	03/01/2016	$52.81	$10.32	$14.54	$0.00	$77.67
	09/01/2016	$53.86	$10.32	$14.54	$0.00	$78.72
	03/01/2017	$54.86	$10.32	$14.54	$0.00	$79.72

Classification	Effective Date	Base Wage	Health	Pension	Supplemental Unemployment	Total Rate

Apprentice - *PLUMBER/GASFITTER - Local 12*

Effective Date - 09/01/2014

Step	percent	Apprentice Base Wage	Health	Pension	Supplemental Unemployment	Total Rate
1	35	$17.38	$10.32	$5.42	$0.00	$33.12
2	40	$19.86	$10.32	$6.13	$0.00	$36.31
3	55	$27.31	$10.32	$8.23	$0.00	$45.86
4	65	$32.28	$10.32	$9.64	$0.00	$52.24
5	75	$37.25	$10.32	$11.04	$0.00	$58.61

Effective Date - 03/01/2015

Step	percent	Apprentice Base Wage	Health	Pension	Supplemental Unemployment	Total Rate
1	35	$17.73	$10.32	$5.42	$0.00	$33.47
2	40	$20.26	$10.32	$6.11	$0.00	$36.69
3	55	$27.86	$10.32	$8.22	$0.00	$46.40
4	65	$32.93	$10.32	$9.62	$0.00	$52.87
5	75	$38.00	$10.32	$11.03	$0.00	$59.35

Notes:
** 1:2; 2:6; 3:10; 4:14; 5:19/Steps are 1 yr
Step4 with lic$55.42 Step5 with lic$61.79

Apprentice to Journeyworker Ratio:**

PNEUMATIC CONTROLS (TEMP.) *PIPEFITTERS LOCAL 537*	09/01/2014	$48.69	$9.20	$16.64	$0.00	$74.53
	03/01/2015	$49.69	$9.20	$16.64	$0.00	$75.53
	09/01/2015	$50.69	$9.20	$16.64	$0.00	$76.53
	03/01/2016	$51.69	$9.20	$16.64	$0.00	$77.53
	09/01/2016	$52.69	$9.20	$16.64	$0.00	$78.53
	03/01/2017	$53.69	$9.20	$16.64	$0.00	$79.53
For apprentice rates see "Apprentice- PIPEFITTER" or "PLUMBER/PIPEFITTER"						
PNEUMATIC DRILL/TOOL OPERATOR *LABORERS - ZONE 2*	06/01/2014	$30.60	$7.30	$12.10	$0.00	$50.00
	12/01/2014	$31.10	$7.30	$12.10	$0.00	$50.50
	06/01/2015	$31.60	$7.30	$12.10	$0.00	$51.00
	12/01/2015	$32.10	$7.30	$12.10	$0.00	$51.50
	06/01/2016	$32.60	$7.30	$12.10	$0.00	$52.00
	12/01/2016	$33.35	$7.30	$12.10	$0.00	$52.75
For apprentice rates see "Apprentice- LABORER"						
POWDERMAN & BLASTER *LABORERS - ZONE 2*	06/01/2014	$31.35	$7.30	$12.10	$0.00	$50.75
	12/01/2014	$31.85	$7.30	$12.10	$0.00	$51.25
	06/01/2015	$32.35	$7.30	$12.10	$0.00	$51.75
	12/01/2015	$32.85	$7.30	$12.10	$0.00	$52.25
	06/01/2016	$33.35	$7.30	$12.10	$0.00	$52.75
	12/01/2016	$34.10	$7.30	$12.10	$0.00	$53.50
For apprentice rates see "Apprentice- LABORER"						

Classification	Effective Date	Base Wage	Health	Pension	Supplemental Unemployment	Total Rate
POWER SHOVEL/DERRICK/TRENCHING MACHINE *OPERATING ENGINEERS LOCAL 4*	06/01/2014	$41.49	$10.00	$14.20	$0.00	$65.69
	12/01/2014	$42.49	$10.00	$14.20	$0.00	$66.69
	06/01/2015	$43.24	$10.00	$14.20	$0.00	$67.44
	12/01/2015	$44.49	$10.00	$14.20	$0.00	$68.69
	06/01/2016	$45.24	$10.00	$14.20	$0.00	$69.44
	12/01/2016	$46.49	$10.00	$14.20	$0.00	$70.69
	06/01/2017	$47.49	$10.00	$14.20	$0.00	$71.69
	12/01/2017	$48.49	$10.00	$14.20	$0.00	$72.69
For apprentice rates see "Apprentice- OPERATING ENGINEERS"						
PUMP OPERATOR (CONCRETE) *OPERATING ENGINEERS LOCAL 4*	06/01/2014	$41.49	$10.00	$14.20	$0.00	$65.69
	12/01/2014	$42.49	$10.00	$14.20	$0.00	$66.69
	06/01/2015	$43.24	$10.00	$14.20	$0.00	$67.44
	12/01/2015	$44.49	$10.00	$14.20	$0.00	$68.69
	06/01/2016	$45.24	$10.00	$14.20	$0.00	$69.44
	12/01/2016	$46.49	$10.00	$14.20	$0.00	$70.69
	06/01/2017	$47.49	$10.00	$14.20	$0.00	$71.69
	12/01/2017	$48.49	$10.00	$14.20	$0.00	$72.69
For apprentice rates see "Apprentice- OPERATING ENGINEERS"						
PUMP OPERATOR (DEWATERING, OTHER) *OPERATING ENGINEERS LOCAL 4*	06/01/2014	$28.80	$10.00	$14.20	$0.00	$53.00
	12/01/2014	$29.50	$10.00	$14.20	$0.00	$53.70
	06/01/2015	$30.02	$10.00	$14.20	$0.00	$54.22
	12/01/2015	$30.89	$10.00	$14.20	$0.00	$55.09
	06/01/2016	$31.41	$10.00	$14.20	$0.00	$55.61
	12/01/2016	$32.28	$10.00	$14.20	$0.00	$56.48
	06/01/2017	$32.97	$10.00	$14.20	$0.00	$57.17
	12/01/2017	$33.66	$10.00	$14.20	$0.00	$57.86
For apprentice rates see "Apprentice- OPERATING ENGINEERS"						
READY-MIX CONCRETE DRIVER *TEAMSTERS LOCAL 49*	05/01/2010	$22.88	$6.97	$3.94	$0.00	$33.79
RECLAIMERS *OPERATING ENGINEERS LOCAL 4*	06/01/2014	$41.10	$10.00	$14.20	$0.00	$65.30
	12/01/2014	$42.09	$10.00	$14.20	$0.00	$66.29
	06/01/2015	$42.83	$10.00	$14.20	$0.00	$67.03
	12/01/2015	$44.07	$10.00	$14.20	$0.00	$68.27
	06/01/2016	$44.82	$10.00	$14.20	$0.00	$69.02
	12/01/2016	$46.05	$10.00	$14.20	$0.00	$70.25
	06/01/2017	$47.04	$10.00	$14.20	$0.00	$71.24
	12/01/2017	$48.03	$10.00	$14.20	$0.00	$72.23
For apprentice rates see "Apprentice- OPERATING ENGINEERS"						
RESIDENTIAL WOOD FRAME (All Other Work) *CARPENTERS -ZONE 2 (Residentiol Wood)*	04/01/2011	$24.24	$8.67	$15.51	$0.00	$48.42
RESIDENTIAL WOOD FRAME CARPENTER ** ** The Residential Wood Frame Carpenter classification applies only to the construction of new, wood frame residences that do not exceed four stories including the basement. *CARPENTERS -ZONE 2 (Residential Wood)*	05/01/2011	$24.24	$6.34	$6.23	$0.00	$36.81

As of 9/1/09 Carpentry work on wood-frame residential WEATHERIZATION projects shall be paid the RESIDENTIAL WOOD FRAME CARPENTER rate.

Classification	Effective Date	Base Wage	Health	Pension	Supplemental Unemployment	Total Rate

Apprentice - *CARPENTER (Residential Wood Frame) - Zone 2*

Effective Date - 05/01/2011

Step	percent	Apprentice Base Wage	Health	Pension	Supplemental Unemployment	Total Rate
1	60	$14.54	$6.34	$0.00	$0.00	$20.88
2	60	$14.54	$6.34	$6.23	$0.00	$27.11
3	65	$15.76	$6.34	$6.23	$0.00	$28.33
4	70	$16.97	$6.34	$6.23	$0.00	$29.54
5	75	$18.18	$6.34	$6.23	$0.00	$30.75
6	80	$19.39	$6.34	$6.23	$0.00	$31.96
7	85	$20.60	$6.34	$6.23	$0.00	$33.17
8	90	$21.82	$6.34	$6.23	$0.00	$34.39

Notes:

Apprentice to Journeyworker Ratio:1:5

RIDE-ON MOTORIZED BUGGY OPERATOR *LABORERS - ZONE 2*	06/01/2014	$30.60	$7.30	$12.10	$0.00	$50.00
	12/01/2014	$31.10	$7.30	$12.10	$0.00	$50.50
	06/01/2015	$31.60	$7.30	$12.10	$0.00	$51.00
	12/01/2015	$32.10	$7.30	$12.10	$0.00	$51.50
	06/01/2016	$32.60	$7.30	$12.10	$0.00	$52.00
	12/01/2016	$33.35	$7.30	$12.10	$0.00	$52.75
For apprentice rates see "Appreutice- LABORER"						
ROLLER/SPREADER/MULCHING MACHINE *OPERATING ENGINEERS LOCAL 4*	06/01/2014	$41.10	$10.00	$14.20	$0.00	$65.30
	12/01/2014	$42.09	$10.00	$14.20	$0.00	$66.29
	06/01/2015	$42.83	$10.00	$14.20	$0.00	$67.03
	12/01/2015	$44.07	$10.00	$14.20	$0.00	$68.27
	06/01/2016	$44.82	$10.00	$14.20	$0.00	$69.02
	12/01/2016	$46.05	$10.00	$14.20	$0.00	$70.25
	06/01/2017	$47.04	$10.00	$14.20	$0.00	$71.24
	12/01/2017	$48.03	$10.00	$14.20	$0.00	$72.23
For apprentice rates see "Apprentice- OPERATING ENGINEERS"						
ROOFER (Inc.Roofer Waterproofng &Roofer Damproofg) *ROOFERS LOCAL 33*	08/01/2014	$39.21	$10.50	$11.60	$0.00	$61.31
	02/01/2015	$40.11	$10.50	$11.60	$0.00	$62.21
	08/01/2015	$41.01	$10.50	$11.60	$0.00	$63.11
	02/01/2016	$41.91	$10.50	$11.60	$0.00	$64.01

Classification	Effective Date	Base Wage	Health	Pension	Supplemental Unemployment	Total Rate

Apprentice - *ROOFER - Local 33*

Effective Date - 08/01/2014

Step	percent	Apprentice Base Wage	Health	Pension	Supplemental Unemployment	Total Rate
1	50	$19.61	$10.50	$3.38	$0.00	$33.49
2	60	$23.53	$10.50	$11.60	$0.00	$45.63
3	65	$25.49	$10.50	$11.60	$0.00	$47.59
4	75	$29.41	$10.50	$11.60	$0.00	$51.51
5	85	$33.33	$10.50	$11.60	$0.00	$55.43

Effective Date - 02/01/2015

Step	percent	Apprentice Base Wage	Health	Pension	Supplemental Unemployment	Total Rate
1	50	$20.06	$10.50	$3.38	$0.00	$33.94
2	60	$24.07	$10.50	$11.60	$0.00	$46.17
3	65	$26.07	$10.50	$11.60	$0.00	$48.17
4	75	$30.08	$10.50	$11.60	$0.00	$52.18
5	85	$34.09	$10.50	$11.60	$0.00	$56.19

Notes: ** 1:5, 2:6-10, the 1:10; Reroofing: 1:4, then 1:1
Step 1 is 2000 hrs.; Steps 2-5 are 1000 hrs.

Apprentice to Journeyworker Ratio:**

ROOFER SLATE / TILE / PRECAST CONCRETE *ROOFERS LOCAL 33*	08/01/2014	$39.46	$10.50	$11.60	$0.00	$61.56
	02/01/2015	$40.36	$10.50	$11.60	$0.00	$62.46
	08/01/2015	$41.26	$10.50	$11.60	$0.00	$63.36
	02/01/2016	$42.16	$10.50	$11.60	$0.00	$64.26
For apprentice rates see "Apprentice- ROOFER"						
SHEETMETAL WORKER *SHEETMETAL WORKERS LOCAL 17 - A*	08/01/2014	$42.79	$9.82	$20.54	$2.19	$75.34
	02/01/2015	$43.69	$9.82	$20.54	$2.19	$76.24
	08/01/2015	$44.69	$9.82	$20.54	$2.19	$77.24
	02/01/2016	$45.69	$9.82	$20.54	$2.19	$78.24
	08/01/2016	$46.84	$9.82	$20.54	$2.19	$79.39
	02/01/2017	$47.94	$9.82	$20.54	$2.19	$80.49
	08/01/2017	$49.04	$9.82	$20.54	$2.19	$81.59
	02/01/2018	$50.19	$9.82	$20.54	$2.19	$82.74

Classification	Effective Date	Base Wage	Health	Pension	Supplemental Unemployment	Total Rate

Apprentice - *SHEET METAL WORKER - Local 17-A*

Effective Date - 08/01/2014

Step	percent	Apprentice Base Wage	Health	Pension	Supplemental Unemployment	Total Rate
1	40	$17.12	$9.82	$4.58	$0.00	$31.52
2	40	$17.12	$9.82	$4.58	$0.00	$31.52
3	45	$19.26	$9.82	$9.09	$1.15	$39.32
4	45	$19.26	$9.82	$9.09	$1.15	$39.32
5	50	$21.40	$9.82	$9.91	$1.23	$42.36
6	50	$21.40	$9.82	$10.16	$1.24	$42.62
7	60	$25.67	$9.82	$11.55	$1.41	$48.45
8	65	$27.81	$9.82	$12.38	$1.50	$51.51
9	75	$32.09	$9.82	$14.02	$1.68	$57.61
10	85	$36.37	$9.82	$15.16	$1.84	$63.19

Effective Date - 02/01/2015

Step	percent	Apprentice Base Wage	Health	Pension	Supplemental Unemployment	Total Rate
1	40	$17.48	$9.82	$4.58	$0.00	$31.88
2	40	$17.48	$9.82	$4.58	$0.00	$31.88
3	45	$19.66	$9.82	$9.09	$1.16	$39.73
4	45	$19.66	$9.82	$9.09	$1.16	$39.73
5	50	$21.85	$9.82	$9.91	$1.25	$42.83
6	50	$21.85	$9.82	$10.16	$1.25	$43.08
7	60	$26.21	$9.82	$11.55	$1.43	$49.01
8	65	$28.40	$9.82	$12.38	$1.52	$52.12
9	75	$32.77	$9.82	$14.02	$1.70	$58.31
10	85	$37.14	$9.82	$15.16	$1.86	$63.98

Notes:
Steps are 6 mos.

Apprentice to Journeyworker Ratio:1:4

SIGN ERECTOR *PAINTERS LOCAL 35 - ZONE 2*	06/01/2013	$25.81	$7.07	$7.05	$0.00	$39.93

Classification	Effective Date	Base Wage	Health	Pension	Supplemental Unemployment	Total Rate

Apprentice - *SIGN ERECTOR - Local 35 Zone 2*

Effective Date - 06/01/2013

Step	percent	Apprentice Base Wage	Health	Pension	Supplemental Unemployment	Total Rate
1	50	$12.91	$7.07	$0.00	$0.00	$19.98
2	55	$14.20	$7.07	$2.45	$0.00	$23.72
3	60	$15.49	$7.07	$2.45	$0.00	$25.01
4	65	$16.78	$7.07	$2.45	$0.00	$26.30
5	70	$18.07	$7.07	$7.05	$0.00	$32.19
6	75	$19.36	$7.07	$7.05	$0.00	$33.48
7	80	$20.65	$7.07	$7.05	$0.00	$34.77
8	85	$21.94	$7.07	$7.05	$0.00	$36.06
9	90	$23.23	$7.07	$7.05	$0.00	$37.35

Notes:
Steps are 4 mos.

Apprentice to Journeyworker Ratio:1:1

SPECIALIZED EARTH MOVING EQUIP < 35 TONS *TEAMSTERS JOINT COUNCIL NO. 10 ZONE B*	08/01/2014	$31.59	$9.91	$8.80	$0.00	$50.30
	12/01/2014	$31.59	$9.91	$9.33	$0.00	$50.83
	06/01/2015	$31.94	$9.91	$9.33	$0.00	$51.18
	08/01/2015	$31.94	$10.41	$9.33	$0.00	$51.68
	12/01/2015	$31.94	$10.41	$10.08	$0.00	$52.43
	06/01/2016	$32.44	$10.41	$10.08	$0.00	$52.93
	08/01/2016	$32.44	$10.91	$10.08	$0.00	$53.43
	12/01/2016	$32.44	$10.91	$10.89	$0.00	$54.24
SPECIALIZED EARTH MOVING EQUIP > 35 TONS *TEAMSTERS JOINT COUNCIL NO. 10 ZONE B*	08/01/2014	$31.88	$9.91	$8.80	$0.00	$50.59
	12/01/2014	$31.88	$9.91	$9.33	$0.00	$51.12
	06/01/2015	$32.23	$9.91	$9.33	$0.00	$51.47
	08/01/2015	$32.23	$10.41	$9.33	$0.00	$51.97
	12/01/2015	$32.23	$10.41	$10.08	$0.00	$52.72
	06/01/2016	$32.73	$10.41	$10.08	$0.00	$53.22
	08/01/2016	$32.73	$10.91	$10.08	$0.00	$53.72
	12/01/2016	$32.73	$10.91	$10.89	$0.00	$54.53
SPRINKLER FITTER *SPRINKLER FITTERS LOCAL 550 - (Section A) Zone 1*	03/01/2014	$53.58	$8.42	$13.60	$0.00	$75.60
	10/01/2014	$54.73	$8.42	$13.60	$0.00	$76.75
	01/01/2015	$54.73	$8.42	$13.75	$0.00	$76.90
	03/01/2015	$55.73	$8.42	$13.75	$0.00	$77.90
	10/01/2015	$56.88	$8.42	$13.75	$0.00	$79.05
	01/01/2016	$56.88	$8.67	$13.90	$0.00	$79.45
	03/01/2016	$57.88	$8.67	$13.90	$0.00	$80.45
	10/01/2016	$59.03	$8.67	$13.90	$0.00	$81.60
	03/01/2017	$60.03	$8.67	$13.90	$0.00	$82.60

Classification	Effective Date	Base Wage	Health	Pension	Supplemental Unemployment	Total Rate

Apprentice - *SPRINKLER FITTER - Local 550 (Section A) Zone 1*

Effective Date - 03/01/2014

Step	percent	Apprentice Base Wage	Health	Pension	Supplemental Unemployment	Total Rate
1	35	$18.75	$8.42	$8.25	$0.00	$35.42
2	40	$21.43	$8.42	$8.25	$0.00	$38.10
3	45	$24.11	$8.42	$8.25	$0.00	$40.78
4	50	$26.79	$8.42	$8.25	$0.00	$43.46
5	55	$29.47	$8.42	$8.25	$0.00	$46.14
6	60	$32.15	$8.42	$8.25	$0.00	$48.82
7	65	$34.83	$8.42	$8.25	$0.00	$51.50
8	70	$37.51	$8.42	$8.25	$0.00	$54.18
9	75	$40.19	$8.42	$8.25	$0.00	$56.86
10	80	$42.86	$8.42	$8.25	$0.00	$59.53

Effective Date - 10/01/2014

Step	percent	Apprentice Base Wage	Health	Pension	Supplemental Unemployment	Total Rate
1	35	$19.16	$8.42	$8.25	$0.00	$35.83
2	40	$21.89	$8.42	$8.25	$0.00	$38.56
3	45	$24.63	$8.42	$8.25	$0.00	$41.30
4	50	$27.37	$8.42	$8.25	$0.00	$44.04
5	55	$30.10	$8.42	$8.25	$0.00	$46.77
6	60	$32.84	$8.42	$8.25	$0.00	$49.51
7	65	$35.57	$8.42	$8.25	$0.00	$52.24
8	70	$38.31	$8.42	$8.25	$0.00	$54.98
9	75	$41.05	$8.42	$8.25	$0.00	$57.72
10	80	$43.78	$8.42	$8.25	$0.00	$60.45

Notes: Apprentice entered prior 9/30/10:
40/45/50/55/60/65/70/75/80/85
Steps are 850 hours

Apprentice to Journeyworker Ratio:1:3

STEAM BOILER OPERATOR *OPERATING ENGINEERS LOCAL 4*	06/01/2014	$41.10	$10.00	$14.20	$0.00	$65.30
	12/01/2014	$42.09	$10.00	$14.20	$0.00	$66.29
	06/01/2015	$42.83	$10.00	$14.20	$0.00	$67.03
	12/01/2015	$44.07	$10.00	$14.20	$0.00	$68.27
	06/01/2016	$44.82	$10.00	$14.20	$0.00	$69.02
	12/01/2016	$46.05	$10.00	$14.20	$0.00	$70.25
	06/01/2017	$47.04	$10.00	$14.20	$0.00	$71.24
	12/01/2017	$48.03	$10.00	$14.20	$0.00	$72.23

For apprentice rates see "Apprentice- OPERATING ENGINEERS"

Classification	Effective Date	Base Wage	Health	Pension	Supplemental Unemployment	Total Rate
TAMPERS, SELF-PROPELLED OR TRACTOR DRAWN	06/01/2014	$41.10	$10.00	$14.20	$0.00	$65.30
OPERATING ENGINEERS LOCAL 4	12/01/2014	$42.09	$10.00	$14.20	$0.00	$66.29
	06/01/2015	$42.83	$10.00	$14.20	$0.00	$67.03
	12/01/2015	$44.07	$10.00	$14.20	$0.00	$68.27
	06/01/2016	$44.82	$10.00	$14.20	$0.00	$69.02
	12/01/2016	$46.05	$10.00	$14.20	$0.00	$70.25
	06/01/2017	$47.04	$10.00	$14.20	$0.00	$71.24
	12/01/2017	$48.03	$10.00	$14.20	$0.00	$72.23
For apprentice rates see "Apprentice- OPERATING ENGINEERS"						
TELECOMMUNICATION TECHNICIAN	09/01/2014	$33.59	$13.00	$13.36	$0.00	$59.95
ELECTRICIANS LOCAL 103	03/01/2015	$33.88	$13.00	$13.70	$0.00	$60.58
	09/01/2015	$34.60	$13.00	$13.72	$0.00	$61.32
	03/01/2016	$35.31	$13.00	$13.74	$0.00	$62.05

Apprentice - *TELECOMMUNICATION TECHNICIAN - Local 103*

Effective Date - 09/01/2014

Step	percent	Apprentice Base Wage	Health	Pension	Supplemental Unemployment	Total Rate
1	40	$13.44	$13.00	$0.40	$0.00	$26.84
2	40	$13.44	$13.00	$0.40	$0.00	$26.84
3	45	$15.12	$13.00	$10.57	$0.00	$38.69
4	45	$15.12	$13.00	$10.57	$0.00	$38.69
5	50	$16.80	$13.00	$10.83	$0.00	$40.63
6	55	$18.47	$13.00	$11.08	$0.00	$42.55
7	60	$20.15	$13.00	$11.33	$0.00	$44.48
8	65	$21.83	$13.00	$11.59	$0.00	$46.42
9	70	$23.51	$13.00	$11.85	$0.00	$48.36
10	75	$25.19	$13.00	$12.10	$0.00	$50.29

Effective Date - 03/01/2015

Step	percent	Apprentice Base Wage	Health	Pension	Supplemental Unemployment	Total Rate
1	40	$13.55	$13.00	$0.41	$0.00	$26.96
2	40	$13.55	$13.00	$0.41	$0.00	$26.96
3	45	$15.25	$13.00	$10.87	$0.00	$39.12
4	45	$15.25	$13.00	$10.87	$0.00	$39.12
5	50	$16.94	$13.00	$11.13	$0.00	$41.07
6	55	$18.63	$13.00	$11.38	$0.00	$43.01
7	60	$20.33	$13.00	$11.64	$0.00	$44.97
8	65	$22.02	$13.00	$11.89	$0.00	$46.91
9	70	$23.72	$13.00	$12.15	$0.00	$48.87
10	75	$25.41	$13.00	$12.41	$0.00	$50.82

Notes:

Apprentice to Journeyworker Ratio:1:1

Classification	Effective Date	Base Wage	Health	Pension	Supplemental Unemployment	Total Rate
TERRAZZO FINISHERS *BRICKLAYERS LOCAL 3 - MARBLE & TILE*	08/01/2014	$47.90	$10.18	$18.22	$0.00	$76.30
	02/01/2015	$48.46	$10.18	$18.22	$0.00	$76.86
	08/01/2015	$49.36	$10.18	$18.29	$0.00	$77.83
	02/01/2016	$49.93	$10.18	$18.29	$0.00	$78.40
	08/01/2016	$50.83	$10.18	$18.37	$0.00	$79.38
	02/01/2017	$51.40	$10.18	$18.37	$0.00	$79.95

Apprentice - *TERRAZZO FINISHER - Local 3 Marble & Tile*

Effective Date - 08/01/2014

Step	percent	Apprentice Base Wage	Health	Pension	Supplemental Unemployment	Total Rate
1	50	$23.95	$10.18	$18.22	$0.00	$52.35
2	60	$28.74	$10.18	$18.22	$0.00	$57.14
3	70	$33.53	$10.18	$18.22	$0.00	$61.93
4	80	$38.32	$10.18	$18.22	$0.00	$66.72
5	90	$43.11	$10.18	$18.22	$0.00	$71.51

Effective Date - 02/01/2015

Step	percent	Apprentice Base Wage	Health	Pension	Supplemental Unemployment	Total Rate
1	50	$24.23	$10.18	$18.22	$0.00	$52.63
2	60	$29.08	$10.18	$18.22	$0.00	$57.48
3	70	$33.92	$10.18	$18.22	$0.00	$62.32
4	80	$38.77	$10.18	$18.22	$0.00	$67.17
5	90	$43.61	$10.18	$18.22	$0.00	$72.01

Notes:

Apprentice to Journeyworker Ratio:1:3

TEST BORING DRILLER *LABORERS - FOUNDATION AND MARINE*	06/01/2014	$35.45	$7.30	$12.90	$0.00	$55.65
	12/01/2014	$36.20	$7.30	$12.90	$0.00	$56.40
	06/01/2015	$36.95	$7.30	$12.90	$0.00	$57.15
	12/01/2015	$37.70	$7.30	$12.90	$0.00	$57.90
	06/01/2016	$38.45	$7.30	$12.90	$0.00	$58.65
	12/01/2016	$39.45	$7.30	$12.90	$0.00	$59.65

For apprentice rates see "Apprentice- LABORER"

TEST BORING DRILLER HELPER *LABORERS - FOUNDATION AND MARINE*	06/01/2014	$34.17	$7.30	$12.90	$0.00	$54.37
	12/01/2014	$34.92	$7.30	$12.90	$0.00	$55.12
	06/01/2015	$35.67	$7.30	$12.90	$0.00	$55.87
	12/01/2015	$36.42	$7.30	$12.90	$0.00	$56.62
	06/01/2016	$37.17	$7.30	$12.90	$0.00	$57.37
	12/01/2016	$38.17	$7.30	$12.90	$0.00	$58.37

For apprentice rates see "Apprentice- LABORER"

Classification	Effective Date	Base Wage	Health	Pension	Supplemental Unemployment	Total Rate
TEST BORING LABORER	06/01/2014	$34.05	$7.30	$12.90	$0.00	$54.25
LABORERS - FOUNDATION AND MARINE	12/01/2014	$34.80	$7.30	$12.90	$0.00	$55.00
	06/01/2015	$35.55	$7.30	$12.90	$0.00	$55.75
	12/01/2015	$36.30	$7.30	$12.90	$0.00	$56.50
	06/01/2016	$37.05	$7.30	$12.90	$0.00	$57.25
	12/01/2016	$38.05	$7.30	$12.90	$0.00	$58.25
For apprentice rates see "Apprentice- LABORER"						
TRACTORS/PORTABLE STEAM GENERATORS	06/01/2014	$41.10	$10.00	$14.20	$0.00	$65.30
OPERATING ENGINEERS LOCAL 4	12/01/2014	$42.09	$10.00	$14.20	$0.00	$66.29
	06/01/2015	$42.83	$10.00	$14.20	$0.00	$67.03
	12/01/2015	$44.07	$10.00	$14.20	$0.00	$68.27
	06/01/2016	$44.82	$10.00	$14.20	$0.00	$69.02
	12/01/2016	$46.05	$10.00	$14.20	$0.00	$70.25
	06/01/2017	$47.04	$10.00	$14.20	$0.00	$71.24
	12/01/2017	$48.03	$10.00	$14.20	$0.00	$72.23
For apprentice rates see "Apprentice- OPERATING ENGINEERS"						
TRAILERS FOR EARTH MOVING EQUIPMENT	08/01/2014	$32.17	$9.91	$8.80	$0.00	$50.88
TEAMSTERS JOINT COUNCIL NO. 10 ZONE B	12/01/2014	$32.17	$9.91	$9.33	$0.00	$51.41
	06/01/2015	$32.52	$9.91	$9.33	$0.00	$51.76
	08/01/2015	$32.52	$10.41	$9.33	$0.00	$52.26
	12/01/2015	$32.52	$10.41	$10.08	$0.00	$53.01
	06/01/2016	$33.02	$10.41	$10.08	$0.00	$53.51
	08/01/2016	$33.02	$10.91	$10.08	$0.00	$54.01
	12/01/2016	$33.02	$10.91	$10.89	$0.00	$54.82
TUNNEL WORK - COMPRESSED AIR	06/01/2014	$46.33	$7.30	$13.30	$0.00	$66.93
LABORERS (COMPRESSED AIR)	12/01/2014	$47.08	$7.30	$13.30	$0.00	$67.68
	06/01/2015	$47.83	$7.30	$13.30	$0.00	$68.43
	12/01/2015	$48.58	$7.30	$13.30	$0.00	$69.18
	06/01/2016	$49.33	$7.30	$13.30	$0.00	$69.93
	12/01/2016	$50.33	$7.30	$13.30	$0.00	$70.93
For apprentice rates see "Apprentice- LABORER"						
TUNNEL WORK - COMPRESSED AIR (HAZ. WASTE)	06/01/2014	$48.33	$7.30	$13.30	$0.00	$68.93
LABORERS (COMPRESSED AIR)	12/01/2014	$49.08	$7.30	$13.30	$0.00	$69.68
	06/01/2015	$49.83	$7.30	$13.30	$0.00	$70.43
	12/01/2015	$50.58	$7.30	$13.30	$0.00	$71.18
	06/01/2016	$51.33	$7.30	$13.30	$0.00	$71.93
	12/01/2016	$52.33	$7.30	$13.30	$0.00	$72.93
For apprentice rates see "Apprentice- LABORER"						
TUNNEL WORK - FREE AIR	06/01/2014	$38.40	$7.30	$13.30	$0.00	$59.00
LABORERS (FREE AIR TUNNEL)	12/01/2014	$39.15	$7.30	$13.30	$0.00	$59.75
	06/01/2015	$39.90	$7.30	$13.30	$0.00	$60.50
	12/01/2015	$40.65	$7.30	$13.30	$0.00	$61.25
	06/01/2016	$41.40	$7.30	$13.30	$0.00	$62.00
	12/01/2016	$42.40	$7.30	$13.30	$0.00	$63.00
For apprentice rates see "Apprentice- LABORER"						

Classification	Effective Date	Base Wage	Health	Pension	Supplemental Unemployment	Total Rate
TUNNEL WORK - FREE AIR (HAZ. WASTE) *LABORERS (FREE AIR TUNNEL)*	06/01/2014	$40.40	$7.30	$13.30	$0.00	$61.00
	12/01/2014	$41.15	$7.30	$13.30	$0.00	$61.75
	06/01/2015	$41.90	$7.30	$13.30	$0.00	$62.50
	12/01/2015	$42.65	$7.30	$13.30	$0.00	$63.25
	06/01/2016	$43.40	$7.30	$13.30	$0.00	$64.00
	12/01/2016	$44.40	$7.30	$13.30	$0.00	$65.00
For apprentice rates see "Apprentice- LABORER"						
VAC-HAUL *TEAMSTERS JOINT COUNCIL NO. 10 ZONE B*	08/01/2014	$31.59	$9.91	$8.80	$0.00	$50.30
	12/01/2014	$31.59	$9.91	$9.33	$0.00	$50.83
	06/01/2015	$31.94	$9.91	$9.33	$0.00	$51.18
	08/01/2015	$31.94	$10.41	$9.33	$0.00	$51.68
	12/01/2015	$31.94	$10.41	$10.08	$0.00	$52.43
	06/01/2016	$32.44	$10.41	$10.08	$0.00	$52.93
	08/01/2016	$32.44	$10.91	$10.08	$0.00	$53.43
	12/01/2016	$32.44	$10.91	$10.89	$0.00	$54.24
WAGON DRILL OPERATOR *LABORERS - ZONE 2*	06/01/2014	$30.60	$7.30	$12.10	$0.00	$50.00
	12/01/2014	$31.10	$7.30	$12.10	$0.00	$50.50
	06/01/2015	$31.60	$7.30	$12.10	$0.00	$51.00
	12/01/2015	$32.10	$7.30	$12.10	$0.00	$51.50
	06/01/2016	$32.60	$7.30	$12.10	$0.00	$52.00
	12/01/2016	$33.35	$7.30	$12.10	$0.00	$52.75
For apprentice rates see "Apprentice- LABORER"						
WASTE WATER PUMP OPERATOR *OPERATING ENGINEERS LOCAL 4*	06/01/2014	$41.49	$10.00	$14.20	$0.00	$65.69
	12/01/2014	$42.49	$10.00	$14.20	$0.00	$66.69
	06/01/2015	$43.24	$10.00	$14.20	$0.00	$67.44
	12/01/2015	$44.49	$10.00	$14.20	$0.00	$68.69
	06/01/2016	$45.24	$10.00	$14.20	$0.00	$69.44
	12/01/2016	$46.49	$10.00	$14.20	$0.00	$70.69
	06/01/2017	$47.49	$10.00	$14.20	$0.00	$71.69
	12/01/2017	$48.49	$10.00	$14.20	$0.00	$72.69
For apprentice rates see "Apprentice- OPERATING ENGINEERS"						
WATER METER INSTALLER *PLUMBERS & GASFITTERS LOCAL 12*	09/01/2014	$49.66	$10.32	$14.54	$0.00	$74.52
	03/01/2015	$50.66	$10.32	$14.54	$0.00	$75.52
	09/01/2015	$51.66	$10.32	$14.54	$0.00	$76.52
	03/01/2016	$52.81	$10.32	$14.54	$0.00	$77.67
	09/01/2016	$53.86	$10.32	$14.54	$0.00	$78.72
	03/01/2017	$54.86	$10.32	$14.54	$0.00	$79.72
For apprentice rates see "Apprentice- PLUMBER/PIPEFITTER" or "PLUMBER/GASFITTER"						
Outside Electrical - East						
CABLE TECHNICIAN (Power Zone) *OUTSIDE ELECTRICAL WORKERS - EAST LOCAL 104*	09/01/2013	$25.66	$8.70	$4.48	$0.00	$38.84
For apprentice rates see "Apprentice- LINEMAN"						
CABLEMAN (Underground Ducts & Cables) *OUTSIDE ELECTRICAL WORKERS - EAST LOCAL 104*	09/01/2013	$36.55	$8.70	$6.58	$0.00	$51.83
For apprentice rates see "Apprentice- LINEMAN"						
DRIVER / GROUNDMAN CDL *OUTSIDE ELECTRICAL WORKERS - EAST LOCAL 104*	09/01/2013	$29.94	$8.70	$6.05	$0.00	$44.69
For apprentice rates see "Apprentice- LINEMAN"						

Classification	Effective Date	Base Wage	Health	Pension	Supplemental Unemployment	Total Rate
DRIVER / GROUNDMAN -Inexperienced (<2000 Hrs) *OUTSIDE ELECTRICAL WORKERS - EAST LOCAL 104* For apprentice rates see "Apprentice- LINEMAN"	09/01/2013	$23.52	$8.70	$5.24	$0.00	$37.46
EQUIPMENT OPERATOR (Class A CDL) *OUTSIDE ELECTRICAL WORKERS - EAST LOCAL 104* For apprentice rates see "Apprentice- LINEMAN"	09/01/2013	$36.35	$8.70	$9.43	$0.00	$54.48
EQUIPMENT OPERATOR (Class B CDL) *OUTSIDE ELECTRICAL WORKERS - EAST LOCAL 104* For apprentice rates see "Apprentice- LINEMAN"	09/01/2013	$32.08	$8.70	$6.59	$0.00	$47.37
GROUNDMAN *OUTSIDE ELECTRICAL WORKERS - EAST LOCAL 104* For apprentice rates see "Apprentice- LINEMAN"	09/01/2013	$23.52	$8.70	$3.72	$0.00	$35.94
GROUNDMAN -Inexperienced (<2000 Hrs.) *OUTSIDE ELECTRICAL WORKERS - EAST LOCAL 104* For apprentice rates see "Apprentice- LINEMAN"	09/01/2013	$19.25	$8.70	$2.85	$0.00	$30.80
JOURNEYMAN LINEMAN *OUTSIDE ELECTRICAL WORKERS - EAST LOCAL 104*	09/01/2013	$42.77	$8.70	$11.78	$0.00	$63.25

Apprentice - *LINEMAN (Outside Electrical) - East Local 104*

Effective Date - 09/01/2013

Step	percent	Apprentice Base Wage	Health	Pension	Supplemental Unemployment	Total Rate
1	60	$25.66	$8.70	$4.24	$0.00	$38.60
2	65	$27.80	$8.70	$4.71	$0.00	$41.21
3	70	$29.94	$8.70	$5.43	$0.00	$44.07
4	75	$32.08	$8.70	$6.16	$0.00	$46.94
5	80	$34.22	$8.70	$6.88	$0.00	$49.80
6	85	$36.35	$8.70	$7.62	$0.00	$52.67
7	90	$38.49	$8.70	$8.83	$0.00	$56.02

Notes:

Apprentice to Journeyworker Ratio:1:2

TELEDATA CABLE SPLICER *OUTSIDE ELECTRICAL WORKERS - EAST LOCAL 104*	07/16/2012	$26.33	$4.18	$2.79	$0.00	$33.30
TELEDATA LINEMAN/EQUIPMENT OPERATOR *OUTSIDE ELECTRICAL WORKERS - EAST LOCAL 104*	07/16/2012	$24.78	$4.18	$2.74	$0.00	$31.70
TELEDATA WIREMAN/INSTALLER/TECHNICIAN *OUTSIDE ELECTRICAL WORKERS - EAST LOCAL 104*	07/16/2012	$24.78	$4.18	$2.74	$0.00	$31.70
TREE TRIMMER *OUTSIDE ELECTRICAL WORKERS - EAST LOCAL 104* This classification applies only to tree work done: (a) for a utility company, R.E.A. cooperative, or railroad or coal mining company, and (b) for the purpose of operating, maintaining, or repairing the utility company's equipment, and (c) by a person who is using hand or mechanical cutting methods and is not on the ground. This classification does not apply to wholesale tree removal.	01/29/2012	$17.18	$3.37	$0.00	$0.00	$20.55
TREE TRIMMER GROUNDMAN *OUTSIDE ELECTRICAL WORKERS - EAST LOCAL 104* This classification applies only to tree work done: (a) for a utility company, R.E.A. cooperative, or railroad or coal mining company, and (b) for the purpose of operating, maintaining, or repairing the utility company's equipment, and (c) by a person who is using hand or mechanical cutting methods and is on the ground. This classification does not apply to wholesale tree removal.	01/29/2012	$15.15	$3.37	$0.00	$0.00	$18.52

Classification	Effective Date	Base Wage	Health	Pension	Supplemental Unemployment	Total Rate

Additional Apprentice Information:

Minimum wage rates for apprentices employed on public works projects are listed above as a percentage of the pre-determined hourly wage rate established by the Commissioner under the provisions of the M.G.L. c. 149, ss. 26-27D. Apprentice ratios are established by the Division of Apprenticeship Training pursuant to M.G.L. c. 23, ss. 11E-11L.

All apprentices must be registered with the Division of Apprenticeship Training in accordance with M.G.L. c. 23, ss. 11E-11L.

All steps are six months (1000 hours) unless otherwise specified.

* Ratios are expressed in allowable number of apprentices to journeymen or fraction thereof.
** Multiple ratios are listed in the comment field.
*** APP to JM; 1:1, 2:2, 2:3, 3:4, 4:4, 4:5, 4:6, 5:7, 6:7, 6:8, 6:9, 7:10, 8:10, 8:11, 8:12, 9:13, 10:13, 10:14, etc.
**** APP to JM; 1:1, 1:2, 2:3, 2:4, 3:5, 4:6, 4:7, 5:8, 6:9, 6:10, 7:11, 8:12, 8:13, 9:14, 10:15, 10:16, etc.

This page intentionally left blank

SECTION 00 73 73

STATUTORY REQUIREMENTS

The address system used herein is the same as the address system used in the General Conditions with the prefix "SC" added thereto. Additional terms used in this Section have the meanings stated below, which are applicable to both the singular and plural thereof.

This Section may include certain provisions required by Laws and Regulations, but does not represent or reflect all applicable provisions and policies or Laws and Regulations, and may only include excerpts and portions thereof. Other required provisions and policies, and Laws and Regulations, shall be deemed to be so included and incorporated herein. Contractor is solely responsible to determine, obtain, review and interpret the full text of applicable provisions and policies, Regulations, and Laws.

The Project is specifically subject to the provisions of the Massachusetts General Laws ("MGL").

SC-1.01.A.15 ***Contractor:*** **Add the following language at the end of the definition.**

Also referred to as "*general Contractor*" in applicable statutory provisions which may be used interchangeably and shall have the same meaning.

SC-1.01.A.29 ***Owner:*** Add the following language at the end of the definition.

Owner may also be referred to as "*Awarding Authority*" or "*contracting authority*" in applicable statutory provisions which may be used interchangeably and shall have the same meaning.

SC-1.01.A.42 ***Specifications:*** Add the following language at the end of the definition.

Specifications are also directed to the designated trade Sub-Bidders or Subcontractors for filed sub-Bid Work pursuant to MGL Chapter 149, Section 44F, *Plans and specifications; sub-bids; form; contents.*

SC-1.01.B ***Additional Terms:*** Add the following new definition.

7. *material or Material* -- As used in MGL Chapter 30, Section 39M *Contracts for construction and materials; manner of awarding*, regarding items equal to those specified, the word "material" shall mean and include any article, assembly, system, included in the Work, or any component part thereof.

SC-4.03 ***Differing Subsurface or Physical Conditions:*** Delete Paragraph 4.03.B in its entirety and insert the following in its place.

B. Pursuant to MGL Chapter 30, Section 39N *Construction contracts; equitable adjustment in contract price for differing subsurface or latent physical conditions*, if, during the progress of the Work, the Contractor or the Awarding Authority discovers that the actual subsurface or latent physical conditions encountered at the Site differ substantially or materially from those shown on the Plans or indicated in the Contract Documents either the Contractor or the contracting authority may request an equitable adjustment in the Contract Price of the Contract applying to Work affected by the differing Site conditions. A request for such an adjustment shall be in writing and shall be delivered by the party making such claim to the other party as soon as possible after such conditions are discovered. Upon receipt of such a claim from a Contractor, or upon its own initiative, the contracting authority shall make an investigation of such physical conditions, and, if they differ substantially or materially from those shown on the Plans or indicated in the Contract Documents or from those ordinarily encountered and generally recognized as inherent in work of the character provided for in the Plans and Contract Documents and are of such a nature as to cause an increase or decrease in the cost of performance of the Work or a change in the construction methods required for the performance of the Work which results in an increase or decrease in the cost of the Work, the contracting authority shall make an equitable adjustment in the Contract Price and the Contract shall be modified in writing accordingly.

SC-5.01 ***Performance, Payment, and Other Bonds:*** Add the following new subparagraphs immediately after Paragraph 5.01.A.

1. Pursuant to MGL Chapter 30, Section 39A *Construction contracts for public ways, airports or public works; truck rentals; security for payment*; and MGL Chapter 149, Section 29 *Bonds for payment for labor, materials, rentals or transportation charges (et al)*; the required payment bond shall also cover payment by the Contractor and Subcontractors for the rental or hire of dump trucks and "the rental or hire of vehicles, steam shovels, rollers propelled by steam or other power, concrete mixers, tools and other appliances and equipment employed in such construction," and for payment of transportation charges directly related to such rental or hire. Such security for payment of transportation charges shall be incorporated by appropriate reference thereto as an additional obligation or condition in the required bonds.

2. In addition, such bonds shall cover payment by Contractor and Subcontractors of any sums due trustees or other persons authorized to collect such payments from the Contractor or Subcontractors, for health and welfare plans, supplementary unemployment benefit plans and other fringe benefits which are payable in cash and provided for in collective

bargaining agreements between organized labor and the Contractor or Subcontractors;

SC-5.02 ***Licensed Sureties and Insurers:*** Add the following new subparagraphs immediately after Paragraph 5.02.A.

1. Pursuant to MGL Chapter 149, Section 29D *Surety company; bonds*, every performance bond and every payment bond issued for any construction work in the Commonwealth shall be the bond of a surety company organized pursuant to Section 105 of MGL Chapter 175 or of a surety company authorized to do business in the Commonwealth under the provisions of section 106 of said Chapter 175 and be approved by the U.S. Department of Treasury and are acceptable as sureties and reinsurers on federal bonds under Title 31 of the United States Code, sections 9304 to 9308.

2. If there is more than one surety company, the surety companies shall be jointly and severally liable.

SC-5.04 ***Contractor's Insurance:***

Add the following language at the end of subparagraph 5.04.A.1.

, pursuant to MGL Chapter 149, Section 34A, *Contracts for public works; workers' compensation insurance; breach of contract; enforcement and violation of statute;*

Add the following language at the end of subparagraph 5.04.C.1,

, in compliance with MGL Chapter 152

SC-6.02 ***Labor; Working Hours:***

Add the following new subparagraphs immediately after subparagraph 6.02.A.1.

2. Pursuant to MGL Chapter 30, Section 39S, *Contracts for construction; requirements*, Contractor shall furnish labor that can work in harmony with all other elements of labor employed or to be employed in the Work.

3. Pursuant to MGL Chapter 149, Section 26 *Public works; preference to veterans and citizens; wages,* preference shall be given to citizens of the Commonwealth of Massachusetts, citizens of the town or city where the Project is located, veterans and service-disabled veterans, and citizens of the United States.

4. The Contractor shall not participate in or cooperate with an international boycott, as defined in Section 999 (b)(3) and (4) of the Internal Revenue Code, as amended , or engage in conduct declared to be unlawful by MGL

Chapter 151E, *Prohibition Of Certain Discrimination By Businesses,* Section 2.

5. Any Work involving the removal, containment, or encapsulation of Asbestos or material containing Asbestos may only be performed by a licensed contractor in accordance with the provisions of MGL Chapter 149, Sections 6A-6E, applicable Laws and Regulations, and requirements as may be included in the Specifications and Drawings.

6. Sheet metal work must be performed by a contractor licensed in accordance with 271 CMR 1.00, et seq. governing licensing, permitting, and sheet metal work in Massachusetts.

Add the following new subparagraph immediately after Paragraph 6.02.B.

1. MGL Chapter 149, Section 30 *Eight hour day and six day week; emergencies; work on highways,* and Section 34 *Public contracts; stipulation as to hours and days of work; void contracts*, apply to this Project which limits work hours of those employed on public construction to 8 hours in any one day or 48 hours in any one week or 6 days in any one week, except in cases of emergency.

SC-6.05 ***Substitutes and "Or-Equals":*** Add the following language at the end of Paragraph 6.05.A.

The provisions of MGL Chapter 30, Section 39M, subsection (b) also applies to this Paragraph.

SC-6.06 ***Concerning Subcontractors, Suppliers, and Others*:**

Add the following language at the end of Paragraph 6.06.F.

, except as indicated in the Specifications and Drawings for filed sub-Bid Work pursuant to MGL Chapter 149, Section 44F, *Plans and specifications; sub-bids; form; contents.*

Add the following new subparagraph immediately after subparagraph 6.06.G.2.

3. The form of subcontract for filed sub-Bid Work shall be in accordance with MGL Chapter 149, Section 44F, subsection (4)(c), a copy of which is included as an attachment to this Section. This form may be supplemented by other provisions required by Laws and Regulations.

SC-6.10 *Taxes*: Add the following new subparagraph immediately after Paragraph 6.10.A.

1. MGL Chapter 64H, Section 6 *Exemptions,* subsection (f) exempts from Massachusetts sales tax, building materials and supplies to be used in the Project, and Contractor shall not include any amount therefor. The words "building materials and supplies" shall include all materials and supplies consumed, employed or expended in the construction, reconstruction, alteration, remodeling or repair of any building, structure, public highway, bridge, or other such public work, as well as such materials and supplies physically incorporated therein. Said words shall also include rental charges for construction vehicles, equipment and machinery rented specifically for use on the Project Site, or while being used exclusively for the transportation of materials for the Project.

SC-6.12 *Record Documents*: Add the following new paragraph and subparagraphs immediately after Paragraph 6.12.A.

B. Subject to the provisions of MGL Chapter 266, Section 67C, *Capital facility construction projects, etc.; false entries in records; penalties,* and pursuant to MGL Chapter 30, Section 39R *Definitions; contract provisions; management and financial statements; enforcement:*

1. the Contractor shall make, and keep for at least six years after final payment, books, records, and accounts which in reasonable detail accurately and fairly reflect the transactions and dispositions of the contractor, and until the expiration of six years after final payment, the office of inspector general, and the commissioner of capital asset management and maintenance shall have the right to examine any books, documents, papers or records of the Contractor or of his Subcontractors that directly pertain to, and involve transactions relating to, the Contractor or his Subcontractors; and

2. the Contractor shall describe any change in the method of maintaining records or recording transactions which materially affect any statements filed with the Awarding Authority and included in Section 00 54 00, including in his description the date of the change and reasons therefor, and shall accompany said description with a letter from the Contractor's independent certified public accountant approving or otherwise commenting on the changes.

3. The Contractor shall annually file with the commissioner of capital asset management and maintenance during the term of the Contract, a financial statement prepared by an independent certified public accountant on the basis of an audit by such accountant. The final statement filed shall include the date of final payment. All statements shall be accompanied by an accountant's report. Such statements shall be made available to the Awarding Authority upon request.

4. Contractor's failure to satisfy any of the requirements of this section of the MGL may be grounds for debarment pursuant to MGL Chapter 149, Section 44C, *Suspension or debarment of contractors.*

SC-9.08 ***Decisions on Requirements of Contract Documents and Acceptability of Work:*** In Paragraph 9.08.B, replace "with reasonable promptness" with "within 30 days pursuant to MGL Chapter 30, Section 39P, *Contracts for construction and materials; awarding authority's decisions on interpretation of specifications, etc.; time limit; notice".*

SC-10.01 ***Authorized Changes in the Work***: Add the following subparagraph immediately after Paragraph 10.01.A.

1. Changes to the Work are subject to the requirements *of* MGL Chapter 30, Section 39I, *Deviations from plans and specifications.*

SC-10.05 ***Claims*:** Add the following paragraph immediately after Paragraph 10.05.G.

H. Presentation of false, fictitious, or fraudulent Claims is subject to the provisions of MGL Chapter 266, Section 67B, *Presentation of false claims.*

SC-11.01. ***Cost of the Work***:

Pursuant to subparagraph 11.01.A.1.a, prevailing wage requirements are included in Sections 00 73 43 and 00 73 46.

Add the following new subparagraph immediately after subparagraph 11.01.A.5.d.

1) The Project is exempt from sales tax as set forth in SC-6.10.

SC-14.02. ***Progress Payments***

Add the following new subparagraph immediately after subparagraph 14.02.A.1.

a. Pursuant to MGL Chapter 30, Section 39S, *Contracts for construction; requirements*, provide certification for each employee employed at the Work Site of successful completion of a course in construction safety and health approved by the United States Occupational Safety and Health Administration that is at least 10 hours in duration at the time the employee begins Work.

Add the following new paragraphs and subparagraphs immediately after Paragraph 14.02.D.3.

E. The following provisions regarding payment are required by MGL Chapter 30, Section 39K *Public building construction contracts; payments.* Provisions referencing "periodic estimate" and "periodic payment" shall be considered Progress Payments per Paragraph 14.02. However, the Engineer will perform some of indicated actions on behalf of the Awarding Authority as its representative, consistent with the role and responsibilities defined in the General Conditions and Supplementary Conditions, and the forms listed in Section 00 60 00 and included in the Contract Documents will be utilized.

1. Within 15 days (30 days in the case of the commonwealth, including local housing authorities) after receipt from the Contractor, at the place designated by the Awarding Authority if such a place is so designated, of a periodic estimate requesting payment of the amount due for the preceding month, the Awarding Authority will make a periodic payment to the Contractor for the work performed during the preceding month and for the materials not incorporated in the work but delivered and suitably stored at the site (or at some location agreed upon in writing) to which the Contractor has title or to which a Subcontractor has title and has authorized the Contractor to transfer title to the Awarding Authority, upon certification by the Contractor that he is the lawful owner and that the materials are free from all encumbrances, but less (1) a retention based on its estimate of the fair value of its claims against the Contractor and less (2) a retention for direct payments to Subcontractors based on demands for same in accordance with the provisions of MGL Chapter 30, Section 39F and less (3) a retention not exceeding 5 per cent of the approved amount of the periodic payment. If the Awarding Authority fails to make payment as herein provided, there shall be added to each such payment daily interest at the rate of 3 percentage points above the rediscount rate than charged by the Federal Reserve Bank of Boston commencing on the first day after said payment is due and continuing until the payment is delivered or mailed to the Contractor; provided, that no interest shall be due, in any event, on the amount due on a periodic estimate for final payment until 15 days (24 days in the case of the commonwealth) after receipt of such a periodic estimate from the Contractor, at the place designated by the Awarding Authority if such a place is so designated. The Contractor agrees to pay to each Subcontractor a portion of any such interest paid in accordance with the amount due each Subcontractor.

F. The following provisions regarding payment to Subcontractors are required by MGL Chapter 30, Section 39F *Construction contracts; assignment and subrogation; subcontractor defined; enforcement of claim for direct payment; deposit, reduction of disputed amounts.* These provisions shall be included in any subcontract in connection with Work under the Contract Documents.

1. The Engineer will perform some of indicated actions on behalf of the Awarding Authority as its representative, consistent with the role and responsibilities defined in the General Conditions and Supplementary Conditions, if any.

   a. Forthwith after the general Contractor receives payment on account of a periodic estimate, the general Contractor shall pay to each Subcontractor the amount paid for the labor performed and the materials furnished by that Subcontractor, less any amount specified in any court proceedings barring such payment and also less any amount claimed due from the Subcontractor by the general Contractor.

   b. Not later than the 65th day after each Subcontractor substantially completes his Work in accordance with the Plans and Specifications, the entire balance due under the subcontract less amounts retained by the Awarding Authority as the estimated cost of completing the incomplete and unsatisfactory items of Work, shall be due the Subcontractor; and the Awarding Authority shall pay that amount to the general Contractor. The general Contractor shall forthwith pay to the Subcontractor the full amount received from the Awarding Authority less any amount specified in any court proceedings barring such payment and also less any amount claimed due from the Subcontractor by the general Contractor.

   c. Each payment made by the Awarding Authority to the general Contractor pursuant to subparagraphs (a) and (b) above for the labor performed and the materials furnished by a Subcontractor shall be made to the general Contractor for the account of that Subcontractor; and the Awarding Authority shall take reasonable steps to compel the general Contractor to make each such payment to each such Subcontractor. If the Awarding Authority has received a demand for direct payment from a Subcontractor for any amount which has already been included in a payment to the general Contractor or which is to be included in a payment to the general Contractor for payment to the Subcontractor as provided in subparagraphs (a) and (b) above, the Awarding Authority shall act upon the demand as provided in this section of the MGL.

   d. If, within 70 days after the Subcontractor has substantially completed the subcontract Work, the Subcontractor has not received from the general Contractor the balance due under the subcontract including any amount due for extra labor and materials furnished to the general Contractor, less any amount retained by the Awarding Authority as the estimated cost of completing the incomplete and unsatisfactory items of Work, the Subcontractor may demand direct payment of that balance from the Awarding Authority. The demand shall be by a sworn statement delivered to

or sent by certified mail to the Awarding Authority, and a copy shall be delivered to or sent by certified mail to the general Contractor at the same time. The demand shall contain a detailed breakdown of the balance due under the subcontract and also a statement of the status of completion of the subcontract work. Any demand made after substantial completion of the subcontract work shall be valid even if delivered or mailed prior to the seventieth day after the Subcontractor has substantially completed the subcontract work. Within 10 days after the Subcontractor has delivered or so mailed the demand to the Awarding Authority and delivered or so mailed a copy to the general Contractor, the general Contractor may reply to the demand. The reply shall be by a sworn statement delivered to or sent by certified mail to the Awarding Authority and a copy shall be delivered to or sent by certified mail to the Subcontractor at the same time. The reply shall contain a detailed breakdown of the balance due under the subcontract including any amount due for extra labor and materials furnished to the general Contractor and of the amount due for each Claim made by the general Contractor against the Subcontractor.

e. Within 15 days after receipt of the demand by the Awarding Authority, but in no event prior to the seventieth day after substantial completion of the subcontract work, the Awarding Authority shall make direct payment to the Subcontractor of the balance due under the subcontract including any amount due for extra labor and materials furnished to the general Contractor, less any amount (i) retained by the Awarding Authority as the estimated cost of completing the incomplete or unsatisfactory items of Work, (ii) specified in any court proceedings barring such payment, or (iii) disputed by the general Contractor in the sworn reply; provided, that the Awarding Authority shall not deduct from a direct payment any amount as provided in part (iii) if the reply is not sworn to, or for which the sworn reply does not contain the detailed breakdown required by subparagraph (d). The Awarding Authority shall make further direct payments to the Subcontractor forthwith after the removal of the basis for deductions from direct payments made as provided in parts (i) and (ii) of this subparagraph.

f. The Awarding Authority shall forthwith deposit the amount deducted from a direct payment as provided in part (iii) of subparagraph (e) above in an interest-bearing joint account in the names of the general Contractor and the Subcontractor in a bank in Massachusetts selected by the Awarding Authority or agreed upon by the general Contractor and the Subcontractor and shall notify the general Contractor and the Subcontractor of the date of the deposit and the bank receiving the deposit. The bank shall pay the amount in the account, including accrued interest, as provided in

an agreement between the general Contractor and the Subcontractor or as determined by decree of a court of competent jurisdiction.

g. All direct payments and all deductions from demands for direct payments deposited in an interest-bearing account or accounts in a bank pursuant to subparagraph (f) above shall be made out of amounts payable to the general Contractor at the time of receipt of a demand for direct payment from a Subcontractor and out of amounts which later become payable to the general Contractor and in the order of receipt of such demands from Subcontractors. All direct payments shall discharge the obligation of the Awarding Authority to the general Contractor to the extent of such payment.

h. The Awarding Authority shall deduct from payments to a general Contractor amounts which, together with the deposits in interest-bearing accounts pursuant to subparagraph (f) above, are sufficient to satisfy all unpaid balances of demands for direct payment received from Subcontractors. All such amounts shall be earmarked for such direct payments, and the Subcontractors shall have a right in such deductions prior to any Claims against such amounts by creditors of the general Contractor.

i. If the Subcontractor does not receive payment as provided in subparagraph (a) or if the general Contractor does not submit a periodic estimate for the value of the labor or materials performed or furnished by the Subcontractor and the Subcontractor does not receive payment for same when due less the deductions provided for in subparagraph (a), the Subcontractor may demand direct payment by following the procedure in subparagraph (d) and the general Contractor may file a sworn reply as provided in that same subparagraph. A demand made after the first day of the month following that for which the Subcontractor performed or furnished the labor and materials for which the Subcontractor seeks payment shall be valid even if delivered or mailed prior to the time payment was due on a periodic estimate from the general Contractor. Thereafter the Awarding Authority shall proceed as provided in subparagraph (e), (f), (g) and (h).

SC-14.04 ***Substantial Completion:*** Add the following new paragraph immediately after Paragraph 14.04.E.

F. Additional provisions covering Substantial Completion included in MGL Chapter 30, Section 39K *Public building construction contracts; payments* apply to this Project. However, the Engineer will perform some of indicated actions on behalf of the Awarding Authority as its representative, consistent with the role and responsibilities defined in the General Conditions and Supplementary Conditions if any, and the forms listed in Section 00 60 00 and included in the Contract Documents will be utilized.

SC 14.07 ***Final Payment:*** Add the following new paragraph and subparagraph immediately after subparagraph 14.07.C.1.

D. The following provisions regarding final payment and completion of the Work are required by MGL Chapter 30, 39K *Public building construction contracts; payments*, however, the Engineer will perform some of indicated actions on behalf of the Awarding Authority as its representative, consistent with the role and responsibilities defined in the General Conditions and Supplementary Conditions if any, and the forms listed in Section 00 60 00 and included in the Contract Documents will be utilized.

1. After the receipt of a periodic estimate requesting final payment and within 65 days after (a) the Contractor fully completes the work or substantially completes the work so that the value of the work remaining to be done is, in the estimate of the Awarding Authority, less than one per cent of the original contract price, or (b) the Contractor substantially completes the work and the Awarding Authority takes possession for occupancy, whichever occurs first, the Awarding Authority shall pay the Contractor the entire balance due on the contract less (1) a retention based on its estimate of the fair value of its claims against the Contractor and of the cost of completing the incomplete and unsatisfactory items of work and less (2) a retention for direct payments to Subcontractors based on demands for same in accordance with the provisions of section thirty-nine F, or based on the record of payments by the Contractor to the Subcontractors under this contract if such record of payment indicates that the Contractor has not paid Subcontractors as provided in MGL Chapter 30, Section 39F. If the Awarding Authority fails to make payment as herein provided, there shall be added to each such payment daily interest at the rate of 3 percentage points above the rediscount rate than charged by the Federal Reserve Bank of Boston commencing on the first day after said payment is due and continuing until the payment is delivered or mailed to the Contractor; provided, that no interest shall be due, in any event, on the amount due on a periodic estimate for final payment until 15 days (24 days in the case of the commonwealth) after receipt of such a periodic estimate from the Contractor, at the place designated by the Awarding Authority if such a place is so designated. The Contractor

agrees to pay to each Subcontractor a portion of any such interest paid in accordance with the amount due each Subcontractor.

SC-15.01 ***Owner May Suspend Work:*** Add the following new subparagraphs immediately after Paragraph 15.01.A.

1. Pursuant to MGL Chapter 30, Section 39O, *Contracts for construction and materials; suspension, delay or interruption due to order of awarding authority; adjustment in contract price; written claim*, the Awarding Authority may order the general Contractor in writing to suspend, delay, or interrupt all or any part of the Work for such period of time as it may determine to be appropriate for the convenience of the Awarding Authority; provided however, that if there is a suspension, delay or interruption for 15 days or more or due to a failure of the Awarding Authority to act within the time specified in the Contract, the Awarding Authority shall make an adjustment in the Contract Price for any increase in the cost of performance of the Contract but shall not include any profit to the general Contractor on such increase; and provided further, that the Awarding Authority shall not make any adjustment in the Contract Price under this provision for any suspension, delay, interruption or failure to act to the extent that such is due to any cause for which this Contract provides for an equitable adjustment of the Contract Price under any other Contract provisions.

2. The general Contractor must submit the amount of a Claim under provision 1 above to the Awarding Authority in writing as soon as practicable after the end of the suspension, delay, interruption or failure to act and, in any event, not later than the date of final payment under the Contract and, except for costs due to a suspension order, the Awarding Authority shall not approve any costs in the Claim incurred more than 20 days before the general Contractor notified the Awarding Authority in writing of the act or failure to act involved in the Claim.

3. In the event a suspension, delay, interruption or failure to act of the Awarding Authority increases the cost of performance to any Subcontractor, that Subcontractor shall have the same rights against the general Contractor for payment for an increase in the cost of his performance as provisions 1 and 2 above give the general Contractor against the Awarding Authority, but nothing in provisions 1 and 2 above shall in any way change, modify or alter any other rights which the general Contractor or the Subcontractor may have against each other.

SC-17.05 ***Controlling Law:*** Add the following new subparagraphs immediately after Paragraph 17.05.A.

1. This Contract is subject to all Laws and Regulations of the United States of America (including the U.S. Code of Federal Regulations), the Commonwealth of Massachusetts and other public authorities, and all amendments thereto. Where any requirements contained herein do not conform to or are inconsistent with such Laws and Regulations to which the Contract is subject or by which it is governed, such Laws and Regulations shall have precedence over any matters set forth herein.

2. The Project is specifically subject to MGL Chapters 30 and 149 for contracts awarded pursuant to MGL Chapter 149, Sections 44A-44H.

3. Statutes, regulations, and portions and summaries thereof which are set forth or referred to in the Contract Documents shall be construed to include all amendments thereto in effect at the time of opening of Bids (or on the Effective Date of the Agreement if there were no Bids). The Owner and Engineer make no representation as to and assume no responsibility for the correctness or completeness of such statutory matters referred to or set forth herein.

4. Any provision in violation of the foregoing shall be deemed null, void and of no effect. Where conflicts with Laws and Regulations exist, the more stringent requirement shall apply.

ATTACHMENTS

A. Form of Subcontract for Filed Sub-Bid Work

END OF SECTION

This page intentionally left blank

FORM OF SUBCONTRACT FOR FILE SUB-BID WORK

SUBCONTRACT

THIS AGREEMENT MADE THIS _____ DAY OF _____, (insert year)by and between _____ a corporation organized and existing under the laws of _____ an individual doing business as _____ hereinafter called the "Contractor" and _____ a corporation organized and existing under the laws of _____ an individual doing business as _____ hereinafter called the "Subcontractor".

WITNESSETH that the Contractor and the Subcontractor for the considerations hereafter named, agree as follows:

1. The Subcontractor agrees to furnish all labor and materials required for the completion of all work specified in Section No. _____ of the specifications for

_____

(Name of Sub-Trade) and the plans referred to therein and addenda No. _____, _____, _____, and _____ for the

_____

_____

(complete title of the project and the project number taken from the title page of the specifications)
all as prepared by _____

(Name of Architect or Engineer)
for the sum of _____ ($_____) and the Contractor agrees to pay the Subcontractor said sum for said work. This price includes the following alternates (and other items set forth in the sub-bid): Alternate No(s). _____, _____, _____, _____, _____, _____, _____, _____, _____, _____, _____, _____, _____, _____

(a) The Subcontractor agrees to be bound to the Contractor by the terms of the hereinbefore described plans; specifications (including all general conditions stated therein) and addenda No. , and , and , and to assume to the Contractor all the obligations and responsibilities that the Contractor by those documents assumes tothe

_____

(Awarding Authority) hereinafter called the "Awarding Authority", except to the extent that provisions contained therein are by their terms or by law applicable only to the Contractor.

(b) The Contractor agrees to be bound to the Subcontractor by the terms of the hereinbefore described documents and to assume to the Subcontractor all the obligations and responsibilities that the Awarding Authority by the terms of the hereinbefore described documents assumes to the Contractor, except to the extent that provisions contained therein are by their terms or by law applicable only to the Awarding Authority.

2. The Contractor agrees to begin, prosecute and complete the entire work specified by the Awarding Authority in an orderly manner so that the Subcontractor will be able to begin, prosecute and complete the work described in this subcontract; and, in consideration thereof, upon notice from the Contractor, either oral or in writing, the Subcontractor agrees to begin, prosecute and complete the work described in this Subcontract in an orderly manner and with due consideration to the date or time specified by the Awarding Authority for the completion of the entire work.

3. The Subcontractor agrees to furnish to the Contractor within a reasonable time after the execution of this subcontract, evidence of workers' compensation insurance as required by law and evidence of public liability and property damage insurance of the type and in limits required to be furnished to the Awarding Authority by the Contractor.

4. The Contractor agrees that no claim for services rendered or materials furnished by the Contractor to the Subcontractor shall be valid unless written notice thereof is given by the Contractor to the Subcontractor during the first ten (10) days of the calendar month following that in which the claim originated.

5. This agreement is contingent upon the execution of a general contract between the Contractor and the Awarding Authority for the complete work.

IN WITNESS WHEREOF, the parties hereto have executed this agreement the date and year first above-written.

SEAL

ATTEST _____

_____

(Name of Subcontractor)

By _____

SEAL

ATTEST _____ _____

(Name of Contractor)

By _____

This page intentionally left blank

SECTION 01 11 00

SUMMARY OF WORK

PART 1 – GENERAL

1.01 SECTION INCLUDES

A. Project Description

B. Description of the Work

C. Work Sequence and Coordination

D. Special Requirements

1.02 PROJECT DESCRIPTION

A. The Project includes all civil, mechanical, process, instrumentation and electrical work required for upgrades to the residuals handling facilities. Also included is earthwork, paving, surface restoration, erosion control, traffic control, appurtenances; and all materials, equipment, services and construction inherent to the Work.

1.03 DESCRIPTION OF THE WORK

A. The Work includes labor, material and equipment, services required for construction, testing, and commissioning of the Project in accordance with the Contract Documents and as more specifically described in the Specifications and Drawings and includes, but is not limited to, the following principal features:

1. Existing Pump Station

    a. Install backwash recycle pumps, motors, VFDs and associated electrical and controls, install pipe and appurtenances

    b. Connect existing recycle main to raw water mains

2. Residuals Lagoons

    a. Clear and grub lagoon 3 perimeter embankment

    b. Remove and dispose of water treatment residual solids from all lagoons

    c. Install decant weir structures in all lagoons

    d. Install lagoon underdrain system in all lagoons

    e. Install underdrain collection pump station, submersible pumps, electrical and controls, pipe and appurtenances

f. Install TSS enclosure and manhole structure

g. Install yard piping

h. Install yard electrical

B. Work Site locations: generally as shown on the Drawings.

C. Existing conditions and Site data: per the Drawings and Section 01 15 00.

1.04 WORK SEQUENCE AND COORDINATION

A. The Work will extend over more than one construction season and must be sequenced to limit impacts to the Lowell Water Treatment Plant operations.

B. The Contractor is responsible for developing his own sequence of construction, however, it is envisioned that construction sequence could be approached as follows:

1. Upgrade recycle station and connect recycle water mains to raw water mains to allow Lagoon 3 to be taken offline. Note that Lagoon 3 currently receives filter backwash waste from the treatment plant. Solids dewatering and a freeze/thaw cycle is anticipated to occur over winter.

2. Install TSS sampler, enclosure, pad, sampling manhole and accessories.

3. Remove and dispose of residual solids from Lagoon 2 and construct Lagoon 2 upgrades. Lagoon 2 is in a drying cycle. Once Lagoon 2 work is complete, the plant will direct residual solids to Lagoon 2 and Lagoon 1 may be taken offline for dewatering. A freeze/thaw cycle will occur over the winter.

4. Remove solids from Lagoon 1 and construct Lagoon 1 upgrades.

5. Clear and grub Lagoon 3, remove solids and construct Lagoon 3 upgrades.

1.05 SPECIAL PROJECT REQUIREMENTS

A. Coordinate permitting through the City Manager's office to obtain the permits referenced in Section 01 15 00.

PART 2 PRODUCTS - NOT USED

PART 3 EXECUTION - NOT USED

END OF SECTION

SECTION 01 11 20

SUMMARY OF FILED SUB-BID REQUIREMENTS

This Contract is subject to the provisions of MGL Chapter 149, Sections 44A through 44H, inclusive.

Pursuant to MGL Chapter 149, section 44F(1)(a), the estimate for each of the following classes of Work exceeds $20,000, separate sub-Bids must be filed, and the Work for these classes of Work has been segregated and is as identified in the Filed Sub-Bid Requirements included in this Section.

Electrical Work

END OF SECTION

This page intentionally left blank

ELECTRICAL WORK
FILED SUB-BID REQUIREMENTS

A. The Work covered by the Specifications and Drawings listed below requires a filed sub-Bid in accordance with MGL c149, §44A through 44J, inclusive, as amended.

B. The Contracting Requirements in Division 00 and other General Requirements in Division 01 apply to the Work covered by the Specifications and Drawings listed below.

C. Examine all Drawings and Specifications for requirements that affect the Work identified.

D. Coordinate the Work covered by the Specifications and Drawings listed below with related Work of other trades and cooperate with such trades to assure the steady progress of all Work under the Contract Documents.

E. The term "Contractor" used herein and in Specifications and Drawings listed below shall mean the Electrical Subcontractor except where "General Contractor" is used.

F. The Work under the Electrical sub-Bid is specified in the following Specification sections:

26 05 00 – Common Work Results for Electrical
26 05 19 – Low-Voltage Electrical Power Conductors and Cables
26 05 26 – Grounding and Bonding for Electrical Systems
26 05 34 – Raceways, Boxes, and Supporting Devices
26 05 43 – Underground Ducts and Raceways for Electrical Systems
26 27 00 – Low-Voltage Distribution Equipment
26 27 26 – Wiring Devices
26 28 16 – Enclosed Switches and Circuit Breakers
26 29 13 – Enclosed Controllers
26 29 23 – Variable Frequency Motor Controllers

and on the following Drawings:

E-001 – Electrical Legend
E-005 – Electrical Site Plan
E-010 – Electrical One-Line & Wiring Diagram
E-015 – Recycle Pump Station Electrical Demolition and New Plans
E-100 – Electrical Details
E-101 – Electrical Details

This listing of Drawings shall not limit the responsibility of the Electrical Subcontractor to determine the full extent of the Work required by the complete set of Drawings.

G. Requirements for Submitting Sub-Bids

1. Sub-Bids for Work covered by the Specifications and Drawings listed above shall comply with the requirements of MGL c149, §44F.

2. Sub-Bids shall be filed on the forms furnished by the Awarding Authority in the Bidding Requirements in a sealed envelope, at the time and place stipulated in the Advertisement for Bids and in accordance with the procedures and requirements set forth in the Bidding Requirements.

H. Sub sub-Bids are required for the following Work per paragraph E of the Form for Sub-Bid - Electrical which is customarily performed under subcontract with the Electrical Subcontractor.

NONE

END OF SECTION

SECTION 01 15 00

SPECIFIC PROJECT REQUIREMENTS AND PROCEDURES

The following supplement the requirements and procedures of Sections 01 15 30, 01 50 00, and 01 70 00 using the same titles, headings, and paragraph numbers to which the supplement applies.

Certain provisions required by Laws and Regulations may be referenced. Contractor is responsible to determine and obtain applicable Laws and Regulations and to review and interpret the full text of such Laws and Regulations.

SECTION 01 15 30 - PAYMENT AND ADMINISTRATIVE PROCEDURES AND QUALITY REQUIREMENTS

1.03 ADMINISTRATIVE REQUIREMENTS

Pursuant to Paragraph A. **Project Management and Coordination; Meetings,**

subparagraph 1., **the Project contact list** will be provided at the preconstruction conference.

subparagraph 4, **identify documents** and items for the Project as follows.

Lowell Regional Water Utility Residuals Handling Facilities Upgrade

Pursuant to Paragraph B. **Documentation of Progress,**

subparagraph 4. **Reports**, submit the following additional reports.

a. Updates to the Construction Operations Plan approved pursuant to SC 2.07 of Section 00 73 10 when it is modified

Pursuant to Paragraph C. **Submittal Procedures**, subparagraph 1., address submittals as follows.

Engineer:
Woodard & Curran
40 Shattuck Road | Suite 110
Andover, MA 01810
Attn: Sarah Lingley
Phone: 978-557-8150
Email: slingley@woodardcurran.com

1.04 QUALITY REQUIREMENTS

Pursuant to Paragraph A. **Reference Standards and Regulatory Requirements**, specific requirements applicable to the Project include the following:

- MassDEP Beneficial Use Determination included as an attachment to this Section
- Comply with the Massachusetts Department of Transportation - Highway Division's (referred to as "MassDOT") Construction Specifications (including Interim Supplemental Specifications and Supplemental Specifications), Construction Details (including Standard Drawings), and Design Guides as incorporated into the Specifications and Drawings, and as may be modified therein or superseded by the Owner's requirements through the direction of the Engineer.
- Specific sections of the MassDOT documents are referenced in the Specifications and Drawings. References to "Department" in the MassDOT documents shall mean Owner or Resident Project Representative for this Project. See MassDOT Highway Division website listing of documents included as an attachment to this Section.

www.massdot.state.ma.us/highway/DoingBusinessWithUs/ManualsPublicationsForms

Pursuant to Paragraph B. **Qualifications**, additional requirements include the following specialty experience.

- General Bidders must be certified by the Commonwealth of Massachusetts Division of Capital Asset Management and Maintenance (DCAMM) for Sewage and Water Treatment Plants.
- Regular and active engagement in the sewer and water infrastructure construction business for a minimum of 5 years
- Any Work involving the removal, containment, or encapsulation of Asbestos or material containing Asbestos may only be performed by a licensed contractor per Section 00 73 73.
- Sheet metal work must be performed by a contractor licensed per Section 00 73 73.

SECTION 01 50 00 - TEMPORARY FACILITIES AND CONTROLS

1.02 TEMPORARY CONSTRUCTION FACILITIES

Pursuant to Paragraph B, **Protection of Work**, comply with the following additional requirements of MGL Chapter 149, Sections 44F(1) and 44G.

- Contractor shall furnish and install weather protection to provide for adequate heat in the area so protected during the months of November through March. Per DCAMM, "weather protection," means temporary protection of that Work adversely affected by moisture, wind and cold. Weather protection shall be achieved by covering, enclosing and/or heating working areas such that a minimum temperature of 40 degrees Fahrenheit is maintained at the working surface during the months of November through March in order to permit construction to be carried on during such period in accordance with the Progress Schedule.

- After the building or portion thereof is completely enclosed by either permanent construction or substantial temporary materials having a resistance comparable to the specified permanent construction, the Contractor shall provide heat therein of not less than 55 degrees F. nor more than 75 degrees F. The foregoing provisions do not supersede any specific requirements for methods of construction, curing of materials and the like. Such weather protection shall be consistent with the Progress Schedule, shall permit the continuous progress of the Work necessary to maintain an orderly and efficient sequence of construction operations, shall include one thermometer for every 2,000 square feet of floor space or fraction thereof, shall be subject to the Approval of the Awarding Authority, and shall meet such additional requirements as may be specified by Awarding Authority.

Pursuant to Paragraph F. **Traffic Regulation**, subparagraph 2. regarding the **MUTCD**, comply with the following additional requirements.

- Applicable portions of the "Massachusetts Amendments to the 2009 Manual on Uniform Traffic Control Devices and the Standard Municipal Traffic Code" published by the Massachusetts Department of Transportation Highway Division

Pursuant to Paragraph H. **Staging Area**, coordinate staging area location with Owner and Engineer.

1.03 TEMPORARY CONTROLS

Pursuant to Paragraph B. **Water Control and Dewatering**, comply with the following additional requirements.

- MassDEP requirements

Pursuant to Paragraph C. **Erosion and Sediment Control**, comply with the following additional requirements.

- Massachusetts Erosion and Sediment Control Guidelines for Urban and Suburban Areas, prepared by the MassDEP

Pursuant to Paragraph E. **Pollution Control**, submit a plan and employ additional protective measures to prevent harm to wetland resource areas from a potential fuel leak or spill.

SECTION 01 70 00 - EXECUTION AND CLOSEOUT REQUIREMENTS

1.02 OVERALL EXECUTION REQUIREMENTS

Pursuant to Paragraph B. **Existing Conditions**,

subparagraph 3. regarding **underground utilities**, comply with the following additional requirements.

- Contact DIGSAFE (www.digsafe.com) by dialing 811.

subparagraph 4. regarding **reference points**, survey information is included on the Drawings.

Note the following **additional information** regarding Existing Conditions included as an attachment to this section.

ATTACHMENTS

A. Water Treatment Residual Solids Information
B. MassDEP Beneficial Use Determination
C. List of MassDOT Highway Division Documents
D. Alpha Analytical Residuals Report dated May 29, 2014
E. Department of Environmental Protection Permit Approval

END OF SECTION

Water Treatment Residual Solids Information

The water treatment residuals solids are derived from aluminum-based coagulation and flocculation products as well as backwash water from sand, dual media and activated carbon filtration processes.

The Contractor understands that the chemical and physical properties of the material in place will vary over the area and depth of the material, and are expected to change over time. The chemical and physical characterization data for the residuals at the time of sampling can be found attached to Specification Section 01 15 00.

On site dewatering, or additional material (bulking agent) may be blended with the residuals material as required to achieve a specific percent solids or other quality requirement for hauling and final disposal at a receiving facility. The weight bulking agents shall not be included in the weight submitted for payment of solids removal under unit price bid items. If bulking agents are used, the Contractor shall submit weight slips for all material brought onto the site. The weight of this material will be subtracted from the total weight of material removed from the site to determine the basis for payment (i.e. tons of in-place residuals removed).

Lagoon 1
Lagoon No. 1 is in a fill cycle and will continue to receive water treatment plant residuals until Lagoon 2 upgrades have been completed. Once Lagoon 2 upgrades are complete, the plant will direct residuals into Lagoon 2 and will take Lagoon 2 offline.

Lagoon 2
On May 20, 2014, samples were taking from Lagoon 2 to determine the percent solids of the material in place at four sampled locations around the perimeter of Lagoon 2. The results were 18.6%, 14%, 2%, 1% solids. The Contractor understands that the chemical and physical properties of the material in place will vary over the area and depth of the material, and are expected to change over time.

Lagoon 3
Lagoon 3 is receiving filter backwash and filter-to-waste water from the sand, dual media and activated carbon filters. Once recycle pump station upgrades are complete, the plant will take Lagoon 3 offline.

This page intentionally left blank

COMMONWEALTH OF MASSACHUSETTS
EXECUTIVE OFFICE OF ENERGY & ENVIRONMENTAL AFFAIRS
DEPARTMENT OF ENVIRONMENTAL PROTECTION
ONE WINTER STREET, BOSTON, MA 02108 617-292-5500

DEVAL L. PATRICK
Governor

TIMOTHY P. MURRAY
Lieutenant Governor

IAN A. BOWLES
Secretary

LAURIE BURT
Commissioner

BENEFICIAL USE DETERMINATION
BWP SW 40
Lowell Regional Water Utility
Statewide Approval
Use of Water Treatment Plant Residuals as Alternative Daily Cover Material and/or Shaping and Grading Material
October 2007

Applicant Name:	**Lowell Regional Water Utility**
Mailing Address:	815 Pawtucket Boulevard Lowell, MA 01853
Name of Facility:	**Lowell Regional Water Utility**
Mailing Address:	815 Pawtucket Boulevard Lowell, MA 01853
Operator:	**Lowell Regional Water Utility**
Mailing Address:	815 Pawtucket Boulevard Lowell, MA 01853
DEP Region:	**Department of Environmental Protection** ("MassDEP" or "Department") Business Compliance Division 1 Winter Street Boston, MA 02108
Transmittal No.:	**W138167**

This information is available in alternate format. Call Donald M. Gomes, ADA Coordinator at 617-556-1057. TDD Service - 1-800-298-2207.

MassDEP on the World Wide Web: http://www.mass.gov/dep
Printed on Recycled Paper

I. APPLICATION INFORMATION

Application Information for BUD -- BWP SW 40
Applicant Name: Lowell Regional Water Utility
Transmittal No.: W138167
Application Prepared By:
Woodward & Curran
35 New England Business Center, Suite 180
Andover, MA 01810
Telephone No.: 978 557-8150
Title of Submittal: BWP SW 40 -- Beneficial Use Determination – "Drinking Water Treatment Residuals"

II. BENEFICIAL USE PROPOSAL

The Lowell Regional Water Utility (LRWU) produces about 4 billion gallons a year of drinking water for the City of Lowell and surrounding communities. The treatment process involves the addition of chlorine dioxide for disinfection, sodium hypochlorite to remove ammonia and polyaluminum chlorite as a coagulant to remove suspended materials. The solids removed during this treatment are directed to lagoons where further settlement occurs and decanted liquid is discharged to the Merrimac River. After a number of years the solids collected in the lagoons need to be removed. It is these solids or water treatment plant (WTP) residuals that are the subject of this beneficial use determination (BUD).

The LRWU is requesting approval for use of the WTP residuals as alternative daily cover material at active landfills or as grading and shaping material used during closure of inactive landfills. The applicant has provided data to characterize the chemical and physical nature of the WTP residuals. About 23,000 cubic yards of material is generated about every 4-5 years.

III. GENERAL PERMIT CONDITIONS

A. A determination of beneficial use means that the material is NOT classified as a solid waste ONLY when it is used in accordance with the requirements set forth in this determination. The material shall not be handled or utilized in a manner that will result in the material becoming a solid waste.
B. The beneficial use of this material shall be in compliance with other applicable local, state and federal laws and regulations.
C. MassDEP reserves the right to enter the LRWU facility for inspectional purposes. The inspection may include the sampling of WTP residuals.

D. MassDEP reserves the right to rescind, suspend or modify this permit by the imposition of additional conditions based upon a determination of actual, or the threat of, adverse impacts from the beneficial use of this material.

E. LRWU shall provide MassDEP, within seven (7) days or an alternative period prescribed in writing by MassDEP, any information which MassDEP may request and which is deemed by MassDEP to be relevant in determining whether a cause exists to modify, revoke, or suspend a permit, or to determine whether LRWU is complying with the terms and conditions of the permit

F. *Personnel Training.* LRWU shall instruct or give on-the-job training to all personnel involved in any activity authorized by the permit. Such instruction or on-the-job training shall teach personnel how to comply with the conditions of the permit and to carry out the authorized activity in a manner that is not hazardous to public health, safety, welfare, or the environment.

G. Failure to comply with this determination shall be grounds for enforcement action including without limitation, permit suspension and revocation.

H. LRWU must notify MassDEP in writing of any changes in its process that may modify the physical or chemical nature of the material. A change in processing or use of the material other than specified in the beneficial use determination application will require additional review and approval.

I. A copy of this permit shall be supplied to any Massachusetts landfill intending to use this material as alternative daily cover material (ADCM) or grading and shaping material. LRWU shall obtain a signature from the landfill operator indicating that the landfill operator has received a copy of the permit and is aware of the permit conditions that relate to landfill requirements.

J. *Transfer of Permits.* Pursuant to 310 CMR 19.044, for a transferred permit to remain effective, written proof that the transfer has been completed must be provided to MassDEP within 30 days of the effective date of the transfer.

IV. WATER TREATMENT PLANT RESIDUALS CONDITIONS

A. When lagoon residuals are planned to be removed, LRWU shall analyze the WTP residuals for the parameters as described in the application. If the results of that analysis are significantly different than the reported historical values, LRWU shall notify MassDEP. For purposes of this approval, significant shall be defined as any value that falls outside the 95% confidence interval of the statistical evaluation of the cumulative data. LRWU is not required to notify MassDEP if the results are consistent with historical values.

B. LRWU shall ensure that all WTP residuals will be sufficiently dried before transportation such that no free water will be decanted during transportation.

C. LRWU shall ensure that WTP residuals are properly contained during transportation and that the handling and transportation of the WTP residuals will not create nuisance conditions such as odors and dust.

V. LANDFILL CONDITIONS – USE AS ALTERNATIVE DAILY COVER

A. The landfill operator shall immediately take steps to abate any nuisance condition(s) including, but not limited to, noise, dust and odor resulting from activities associated with the use of WTP residuals as alternative daily cover material (ADCM).

B. The landfill operator shall notify the appropriate regional office of MassDEP at least thirty (30) days prior to its intended use of WTP residuals as ADCM.

C. WTP residuals shall be mixed with other approved daily cover materials at a ratio of at least 1:1, by volume, when used as ADCM.

D. The daily quantity of WTP residuals, in combination with all other materials used as daily cover, that may be used at a landfill shall not exceed the quantity necessary to meet the performance standards for daily cover specified at 310 CMR 19.130 (15). A quantity in excess of this amount may be considered disposal. Furthermore, daily cover is generally limited to a quantity no greater than twenty (20) percent by weight of the amount of waste disposed in that day. Daily cover materials used above this percentage may be considered disposal.

E. A minimum quantity of daily cover material, other than WTP residuals, sufficient for nine (9) working days of operation shall be stockpiled at the landfill or shall be readily available.

F. Landfills using WTP residuals generated by LRWU shall not stockpile more WTP residuals than can reasonably be used as alternative daily cover in a five (5) day period. Stockpiled WTP residuals shall be properly controlled to prevent runoff and nuisance conditions.

G. Any landfill using WTP residuals shall keep accurate records of the amount of material used as ADCM. The amount of WTP residuals, soil and all other cover materials shall be reported in that landfill's annual report.

H. MassDEP shall be notified as soon as possible, but no later than twenty-four (24) hours, should conditions of nuisance odor occur at the site as a result of the beneficial use activities.

VIII. LANDFILL CONDITIONS - GRADING AND SHAPING

A. WTP residuals shall be used as grading and shaping material only if the landfill owner/operator applies for and receives approval from the appropriate Regional Office of MassDEP for its use as part of an approved closure plan for that facility.

B. A copy of this permit and the application for modification of the closure plan as required in VIII.A. above shall be supplied to the Board of Health in the city or town where the landfill closure is taking place.

C. WTP residuals shall be mixed with other approved grading and shaping materials at a ratio of at least 1:1, by volume, when placed during closure activity.

D. The regional approval shall address site specific issues including, but not limited to, storage requirements (amounts and locations), quantity of material to be used, spreading and compacting requirements, length of time before exposed material is covered by other materials, amount of area that will have exposed WTP residuals, erosion and storm water controls and dust and other nuisance control methods.

E. WTP residuals used as grading and shaping material shall be used in accordance with the standard operating procedures addressing record keeping, landfill operation practices and erosion control as stated below as those requirements may be modified by the regional approval required by VIII.A. above.

F. Landfill Operating Practices. All WTP residuals shall be stockpiled within the landfill footprint. The landfill shall not stockpile more material than can be spread in a five (5) day period. Stockpiled WTP residuals shall be properly controlled to prevent runoff and nuisance conditions. All material shall be spread and compacted as soon as possible following receipt of the material. The material shall be placed in lifts not exceeding eighteen (18) inches and be compacted by a minimum of three (3) passes of landfill compaction equipment having a minimum equipment weight of twenty (20) tons. All WTP residuals shall be covered with soil or other approved materials within seven (7) days unless another lift of WTP residuals is placed within that time period.

G. Erosion Control. Erosion controls, consisting of hay bales and silt fencing, shall be installed within areas receiving WTP residuals for grading and shaping to prevent migration of the material. In addition, hay bales and silt fencing shall be installed around all material stockpiles on site. Following placement, all material shall be graded to minimize erosion. Inspection of erosion control measures shall be performed on a regular basis and maintenance performed on an as needed basis. Dust control on the site shall consist of regular maintenance of access and service roadways to minimize dust generation. In the event of nuisance dust generation from areas of the site receiving WTP residuals a six (6) inch layer of other daily cover material shall be placed over the areas to minimize the generation of dust.

H. The allowable amount of WTP residuals to be used as grading and shaping material at a site shall be limited to that quantity necessary for grading and shaping to achieve pre-capping contours as specified in the facility's approved final closure plan. Placement of WTP residuals in excess of what is needed to meet closure requirements does not constitute beneficial use. MassDEP may initiate enforcement actions, including notices of noncompliance, orders and penalties, and require the removal of WTP residuals that is placed in violation of a valid approval.

I. Any landfill using WTP residuals shall keep accurate records of the amount of WTP residuals used as grading and shaping material. The amount of WTP residuals, soil and all other grading and shaping materials shall be reported in that Landfill's annual report.

J. MassDEP shall be notified as soon as possible, but no later than twenty-four (24) hours, should conditions of nuisance odor occur at the site as a result of the beneficial use activities.

IX. RECORD KEEPING AND REPORTING

A. LRWU shall retain at its business office all records and copies of applications, reports, and other documents required by this determination, which shall be readily available for inspection by MassDEP, for a period of three (3) years beyond the final distribution of WTP residuals as alternative daily cover or grading and shaping material.

B. All WTP residuals shipped as alternative daily cover material or grading and shaping material shall be transported with a material shipping record detailing, at a minimum, the generating facility, receiving facility name, tonnage, date of shipment, date received and truck identification. The shipping and receiving facilities shall each maintain copies of the shipping record.

X. RIGHT OF APPEAL

Right to Appeal. Any person aggrieved by the issuance or denial of this permit decision except as provided for under 310 CMR 19.037 (4)(b), may file an appeal for judicial review of said decision in accordance with the provisions of Massachusetts General Law (M.G.L.), Chapter 111, Section 150A not later than 30 days following the receipt of the final permit. The standing of a person to file an appeal and the procedures for filing such appeal shall be governed by the provisions of M.G.L. c. 30A. Unless the person requesting an appeal requests and is granted a stay of the terms and conditions of the permit by a court of competent jurisdiction, the permit decision shall remain effective or become effective at the conclusion of the 30 day period.

Notice of Appeal. Any aggrieved person intending to appeal a grant or denial of a permit to the Superior Court shall first provide notice of intention to commence such action. Said notice of intention shall include MassDEP file number and shall identify with particularity the issues and reason why it is believed the permit decision was not proper. Such notice shall be provided to the Office of General Counsel of MassDEP and the Deputy Division Director for Regulatory Standards of the Business Compliance Division at least five days before the filing of an appeal.

a) Office of General Counsel
Department of Environmental Protection
One Winter Street
Boston, MA 02108

b) Deputy Division Director, Regulatory Standards
Department of Environmental Protection
Business Compliance Division
One Winter Street
Boston, MA 02108

No allegation shall be made in any judicial appeal of a permit decision unless the matter complained of was raised at the appropriate point in the administrative review procedures established in these regulations, provided that a matter may be raised upon a showing that it is material and that it was not reasonably possible with due diligence to have been raised during such procedures or that matter sought to be raised is of critical importance to the environmental impact of the permitted activity.

If you have any questions regarding this matter, please contact Paul Emond of the Business Compliance Division at (617) 292-5974.

Sincerely,

Steven A. DeGabriele
Director
Business Compliance Division
Bureau of Waste Prevention

Date: 10/19/07

CC: Solid Waste Section Chiefs
Woodward & Curran

This page intentionally left blank

http://www.massdot.state.ma.us/highway/DoingBusinessWithUs/ManualsPublicationsForms.aspx

Manuals, Publications & Forr

Doing Business With Us

- Construction
- Design/Engineering
- Contractor/Vendor Information
- Approved Materials and Fabricators
- Local Aid Programs
- Permits & Road Access Programs
- Seasonal
- Manuals, Publications & Forms

MassDOT posts most of its manuals, publications and forms on its website. To view the documents listed below, click on the links. If you can't find what you're looking for below, please browse by department.

- Construction Specifications
- Construction Details
- Design Guides
- Project Management Guides
- Right of Way Brochures
- Highway Access Permits
- Miscellaneous Publications

Construction Specifications

Title	Date	File Type/Size
Standard Specification for Highways and Bridges (English Edition)	1988	HTML
Standard Specifications for Highways and Bridges (Metric Edition)	1995	PDF | 2.49ME
Supplemental Specifications to the Standard Specifications for Highways and Bridges	6/15/2012	PDF | 1.6MB
Interim Supplemental Specifications	1/25/2013	PDF | 86KB

Price Adjustments	Updated Monthly	View Pages
Superseded Publications		
Supplemental Specifications to the 1988 Standard Specifications for Highways and Bridges (Combined English and Metric Edition) (Combined English and Metric Edition)	2/25/2010	PDF | 1MB
Supplemental Specifications to the 1988 Standard Specifications for Highways and Bridges (English Edition)	6/6/2006	PDF | 1.73ME
Supplemental Specifications to the 1995 Standard Specifications for Highways and Bridges (Metric Edition)	6/6/2006	PDF | 1.41mI

Construction Details

Title	Date	File Type/Size
2012 Construction Standard Details	March 2012	PDF | 27MB
2012 Construction Standard Details: Drawing History Index	2012	PDF | 119KB
Notes on Walks and Wheelchair Ramps for Designers and Construction Engineers	March 2012	PDF | 140KB
Traffic Management Plans and Detail Drawings		HTML link
Standard Drawings for Signs and Supports	1990	PDF | 7MB
Standard Drawings for Traffic Signals and Highway Lighting	1968	PDF | 3.25ME
Superseded Publications		
2010 Construction Standard Details (English Edition)	2010	PDF | 13MB
Metric/English Supplemental Drawings Supplement to the 1996 Metric Edition of the Construction and Traffic Standard Details and the 1977	Apr 2003	PDF | 5.6MB

Mass. Department of Public Works Construction Standards		
Construction and Traffic Standard Details (Metric Edition)	1996	PDF | 7.8MB
1966 Construction Standards 1st Edition (Obsolete)	May 1966	PDF | 10MB

http://www.massdot.state.ma.us/highway/DoingBusinessWithUs/ManualsPublicationsForms.aspx

Design Guides

Title	Date	File Type/Size
Project Development & Design Guide	2006	HTML
2009 LRFD Bridge Manual	Oct 2009	HTML
2005 Bridge Manual, Revised August 2007	Aug 2007	HTML
CAD Standards		HTML
Manual on Uniform Traffic Control Devices		FHWA Link
Massachusetts Amendments to the 2009 Manual on Uniform Traffic Control Devices and the Standard Municipal Traffic Code	May 2012	PDF | 1.9MB
Right of Way Manual	03/30/2012	PDF | 12.2MB
Survey Manual	1996	PDF | 1MB
Historic Parkway Preservation Treatment Guidelines (DCR)	Mar 2007	PDF | 28MB
Superseded Publications		
Addenda to the 1997 Highway Design Manual	Apr 2003	PDF | 2.7MB
Highway Design Manual	1997	PDF | 6.65MB

Miscellaneous Publications

Mass.gov

Title	Date	File Type/Size
English Bid Item Nomenclature List	02/12/2013	PDF | 452KB
Metric Bid Item Nomenclature List	02/12/2013	PDF | 453KB
Diesel Equipment Retrofit		HTML
Design Build Procurement Guide	2006	PDF | 206KB
Procedures for Speed Zoning on State and Municipal Roadways	2012	PDF | 2.2MB
Guide Sign Policy for Secondary State Highways	2008	HTML
Identification of Massachusetts Freight Issues and Priorities	Nov 1999	PDF | 7.4MB
Vegetation Management Plans		
Vegetation Management Plan 2009 - 2013	2009	PDF | 654KB
District 1 Vegetation Management Plan 2012 - 2016	2012	PDF | 452KB
Yearly Operational Plan Districts 2-5, 2012	2012	PDF | 37.9MB
District 6 Vegetation Management Plan 2011 - 2015	2011	PDF | 465KB
Herbicide Alternatives Research	Jul-2008	PDF | 8.9MB

ANALYTICAL REPORT

Lab Number:	L1410895
Client:	Woodard & Curran 40 Shattuck Road Suite 110 Andover, MA 01810
ATTN:	Rob Little
Phone:	(978) 557-8150
Project Name:	LOWELL RESIDUALS
Project Number:	227251.3
Report Date:	05/29/14

The original project report/data package is held by Alpha Analytical. This report/data package is paginated and should be reproduced only in its entirety. Alpha Analytical holds no responsibility for results and/or data that are not consistent with the original.

Certifications & Approvals: MA (M-MA086), NY (11148), CT (PH-0574), NH (2003), NJ NELAP (MA935), RI (LAO00065), ME (MA00086), PA (68-03671), USDA (Permit #P-330-11-00240), NC (666), TX (T104704476), DOD (L2217), US Army Corps of Engineers.

Eight Walkup Drive, Westborough, MA 01581-1019
508-898-9220 (Fax) 508-898-9193 800-624-9220 - www.alphalab.com

Project Name: LOWELL RESIDUALS
Project Number: 227251.3

Lab Number: L1410895
Report Date: 05/29/14

Alpha Sample ID	Client ID	Sample Location	Collection Date/Time
L1410895-01	L2S1	LRWU	05/20/14 10:00
L1410895-02	L2S2	LRWU	05/20/14 10:00
L1410895-03	L2S3	LRWU	05/20/14 10:00
L1410895-04	L2S4	LRWU	05/20/14 10:00
L1410895-05	L1S3	LRWU	05/20/14 10:00
L1410895-06	L1S4	LRWU	05/20/14 10:00

Project Name: LOWELL RESIDUALS
Project Number: 227251.3

Lab Number: L1410895
Report Date: 05/29/14

Case Narrative

The samples were received in accordance with the Chain of Custody and no significant deviations were encountered during the preparation or analysis unless otherwise noted. Sample Receipt, Container Information, and the Chain of Custody are located at the back of the report.

Results contained within this report relate only to the samples submitted under this Alpha Lab Number and meet all of the requirements of NELAC, for all NELAC accredited parameters. The data presented in this report is organized by parameter (i.e. VOC, SVOC, etc.). Sample specific Quality Control data (i.e. Surrogate Spike Recovery) is reported at the end of the target analyte list for each individual sample, followed by the Laboratory Batch Quality Control at the end of each parameter. If a sample was re-analyzed or re-extracted due to a required quality control corrective action and if both sets of data are reported, the Laboratory ID of the re-analysis or re-extraction is designated with an "R" or "RE", respectively. When multiple Batch Quality Control elements are reported (e.g. more than one LCS), the associated samples for each element are noted in the grey shaded header line of each data table. Any Laboratory Batch, Sample Specific % recovery or RPD value that is outside the listed Acceptance Criteria is bolded in the report. Performance criteria for CAM and RCP methods allow for some LCS compound failures to occur and still be within method compliance. In these instances, the specific failures are not narrated but are noted in the associated QC table. This information is also incorporated in the Data Usability format for our Data Merger tool where it can be reviewed along with any associated usability implications. Soil/sediments, solids and tissues are reported on a dry weight basis unless otherwise noted. Definitions of all data qualifiers and acronyms used in this report are provided in the Glossary located at the back of the report.

In reference to questions H (CAM) or 4 (RCP) when "NO" is checked, the performance criteria for CAM and RCP methods allow for some quality control failures to occur and still be within method compliance. In these instances the specific failure is not narrated but noted in the associated QC table. The information is also incorporated in the Data Usability format of our Data Merger tool where it can be reviewed along with any associated usability implications.

Please see the associated ADEx data file for a comparison of laboratory reporting limits that were achieved with the regulatory Numerical Standards requested on the Chain of Custody.

HOLD POLICY
For samples submitted on hold, Alpha's policy is to hold samples (with the exception of Air canisters) free of charge for 21 calendar days from the date the project is completed. After 21 calendar days, we will dispose of all samples submitted including those put on hold unless you have contacted your Client Service Representative and made arrangements for Alpha to continue to hold the samples. Air canisters will be disposed after 3 business days from the date the project is completed.

Please contact Client Services at 800-624-9220 with any questions.

Project Name:	LOWELL RESIDUALS	**Lab Number:**	L1410895
Project Number:	227251.3	**Report Date:**	05/29/14

Case Narrative (continued)

Sample Receipt

The samples were received at the laboratory above the required temperature range. The samples were transported to the laboratory in a cooler with ice. The client was notified of the exceedance, and all requested analyses were performed.

I, the undersigned, attest under the pains and penalties of perjury that, to the best of my knowledge and belief and based upon my personal inquiry of those responsible for providing the information contained in this analytical report, such information is accurate and complete. This certificate of analysis is not complete unless this page accompanies any and all pages of this report.

Authorized Signature: Michelle M. Morris

Title: Technical Director/Representative Date: 05/29/14

METALS

Project Name: LOWELL RESIDUALS
Project Number: 227251.3
Lab Number: L1410895
Report Date: 05/29/14

SAMPLE RESULTS

Lab ID: L1410895-01
Client ID: L2S1
Sample Location: LRWU
Matrix: Sludge
Percent Solids: 14%

Date Collected: 05/20/14 10:00
Date Received: 05/21/14
Field Prep: Not Specified

Parameter	Result	Qualifier	Units	RL	MDL	Dilution Factor	Date Prepared	Date Analyzed	Prep Method	Analytical Method	Analyst
Total Metals - Westborough Lab											
Arsenic, Total	23		mg/kg	2.8	--	1	05/27/14 16:48	05/28/14 12:43	EPA 3050B	1,6010C	JH
Barium, Total	44		mg/kg	2.8	--	1	05/27/14 16:48	05/28/14 12:43	EPA 3050B	1,6010C	JH
Cadmium, Total	ND		mg/kg	2.8	--	1	05/27/14 16:48	05/28/14 12:43	EPA 3050B	1,6010C	JH
Chromium, Total	26		mg/kg	2.8	--	1	05/27/14 16:48	05/28/14 12:43	EPA 3050B	1,6010C	JH
Lead, Total	29		mg/kg	14	--	1	05/27/14 16:48	05/28/14 12:43	EPA 3050B	1,6010C	JH
Mercury, Total	ND		mg/kg	0.45	--	1	05/24/14 08:17	05/27/14 11:06	EPA 7471B	1,7471B	MC
Selenium, Total	ND		mg/kg	5.5	--	1	05/27/14 16:48	05/28/14 12:43	EPA 3050B	1,6010C	JH
Silver, Total	ND		mg/kg	2.8	--	1	05/27/14 16:48	05/28/14 12:43	EPA 3050B	1,6010C	JH

Project Name: LOWELL RESIDUALS
Project Number: 227251.3
Lab Number: L1410895
Report Date: 05/29/14

SAMPLE RESULTS

Lab ID: L1410895-02
Client ID: L2S2
Sample Location: LRWU
Matrix: Sludge
Percent Solids: 2%

Date Collected: 05/20/14 10:00
Date Received: 05/21/14
Field Prep: Not Specified

Parameter	Result	Qualifier	Units	RL	MDL	Dilution Factor	Date Prepared	Date Analyzed	Prep Method	Analytical Method	Analyst
Total Metals - Westborough Lab											
Arsenic, Total	30		mg/kg	22	--	1	05/27/14 16:48	05/28/14 12:47	EPA 3050B	1,6010C	JH
Barium, Total	77		mg/kg	22	--	1	05/27/14 16:48	05/28/14 12:47	EPA 3050B	1,6010C	JH
Cadmium, Total	ND		mg/kg	22	--	1	05/27/14 16:48	05/28/14 12:47	EPA 3050B	1,6010C	JH
Chromium, Total	33		mg/kg	22	--	1	05/27/14 16:48	05/28/14 12:47	EPA 3050B	1,6010C	JH
Lead, Total	ND		mg/kg	110	--	1	05/27/14 16:48	05/28/14 12:47	EPA 3050B	1,6010C	JH
Mercury, Total	ND		mg/kg	3.6	--	1	05/24/14 08:17	05/27/14 11:08	EPA 7471B	1,7471B	MC
Selenium, Total	ND		mg/kg	43	--	1	05/27/14 16:48	05/28/14 12:47	EPA 3050B	1,6010C	JH
Silver, Total	ND		mg/kg	22	--	1	05/27/14 16:48	05/28/14 12:47	EPA 3050B	1,6010C	JH

Project Name: LOWELL RESIDUALS
Project Number: 227251.3
Lab Number: L1410895
Report Date: 05/29/14

SAMPLE RESULTS

Lab ID: L1410895-06
Client ID: L1S4
Sample Location: LRWU
Matrix: Sludge
Percent Solids: 1%

Date Collected: 05/20/14 10:00
Date Received: 05/21/14
Field Prep: Not Specified

Parameter	Result	Qualifier	Units	RL	MDL	Dilution Factor	Date Prepared	Date Analyzed	Prep Method	Analytical Method	Analyst
Total Metals - Westborough Lab											
Arsenic, Total	ND		mg/kg	45	--	1	05/27/14 16:48	05/28/14 12:51	EPA 3050B	1,6010C	JH
Barium, Total	70		mg/kg	45	--	1	05/27/14 16:48	05/28/14 12:51	EPA 3050B	1,6010C	JH
Cadmium, Total	ND		mg/kg	45	--	1	05/27/14 16:48	05/28/14 12:51	EPA 3050B	1,6010C	JH
Chromium, Total	ND		mg/kg	45	--	1	05/27/14 16:48	05/28/14 12:51	EPA 3050B	1,6010C	JH
Lead, Total	ND		mg/kg	220	--	1	05/27/14 16:48	05/28/14 12:51	EPA 3050B	1,6010C	JH
Mercury, Total	ND		mg/kg	7.9	--	1	05/28/14 07:38	05/28/14 12:43	EPA 7471B	1,7471B	MC
Selenium, Total	ND		mg/kg	89	--	1	05/27/14 16:48	05/28/14 12:51	EPA 3050B	1,6010C	JH
Silver, Total	ND		mg/kg	45.	--	1	05/27/14 16:48	05/28/14 12:51	EPA 3050B	1,6010C	JH

Project Name: LOWELL RESIDUALS
Project Number: 227251.3
Lab Number: L1410895
Report Date: 05/29/14

Method Blank Analysis
Batch Quality Control

Parameter	Result	Qualifier	Units	RL	MDL	Dilution Factor	Date Prepared	Date Analyzed	Analytical Method	Analyst
Total Metals - Westborough Lab for sample(s): 01-02 Batch: WG691990-1										
Mercury, Total	ND		mg/kg	0.08	--	1	05/24/14 08:17	05/27/14 10:48	1,7471B	MC

Prep Information

Digestion Method: EPA 7471B

Parameter	Result	Qualifier	Units	RL	MDL	Dilution Factor	Date Prepared	Date Analyzed	Analytical Method	Analyst
Total Metals - Westborough Lab for sample(s): 06 Batch: WG692680-1										
Mercury, Total	ND		mg/kg	0.08	--	1	05/28/14 07:38	05/28/14 12:36	1,7471B	MC

Prep Information

Digestion Method: EPA 7471B

Parameter	Result	Qualifier	Units	RL	MDL	Dilution Factor	Date Prepared	Date Analyzed	Analytical Method	Analyst
Total Metals - Westborough Lab for sample(s): 01-02,06 Batch: WG692746-1										
Arsenic, Total	ND		mg/kg	0.40	--	1	05/27/14 16:48	05/28/14 11:52	1,6010C	JH
Barium, Total	ND		mg/kg	0.40	--	1	05/27/14 16:48	05/28/14 11:52	1,6010C	JH
Cadmium, Total	ND		mg/kg	0.40	--	1	05/27/14 16:48	05/28/14 11:52	1,6010C	JH
Chromium, Total	ND		mg/kg	0.40	--	1	05/27/14 16:48	05/28/14 11:52	1,6010C	JH
Lead, Total	ND		mg/kg	2.0	--	1	05/27/14 16:48	05/28/14 11:52	1,6010C	JH
Selenium, Total	ND		mg/kg	0.80	--	1	05/27/14 16:48	05/28/14 11:52	1,6010C	JH
Silver, Total	ND		mg/kg	0.40	--	1	05/27/14 16:48	05/28/14 11:52	1,6010C	JH

Prep Information

Digestion Method: EPA 3050B

Lab Control Sample Analysis
Batch Quality Control

Project Name: LOWELL RESIDUALS
Project Number: 227251.3
Lab Number: L1410895
Report Date: 05/29/14

Parameter	LCS %Recovery	Qual	LCSD %Recovery	Qual	%Recovery Limits	RPD	Qual	RPD Limits
Total Metals - Westborough Lab Associated sample(s): 01-02 Batch: WG691990-2 SRM Lot Number: 0518-10-02								
Mercury, Total	127		-		67-133	-		
Total Metals - Westborough Lab Associated sample(s): 06 Batch: WG692680-2 SRM Lot Number: 0518-10-02								
Mercury, Total	130		-		67-133	-		
Total Metals - Westborough Lab Associated sample(s): 01-02,06 Batch: WG692746-2 SRM Lot Number: 0518-10-02								
Arsenic, Total	109		-		81-119	-		
Barium, Total	112		-		83-118	-		
Cadmium, Total	102		-		82-117	-		
Chromium, Total	97		-		80-119	-		
Lead, Total	99		-		80-120	-		
Selenium, Total	106		-		80-120	-		
Silver, Total	102		-		66-134	-		

Matrix Spike Analysis
Batch Quality Control

Project Name: LOWELL RESIDUALS
Project Number: 227251.3

Lab Number: L1410895
Report Date: 05/29/14

Parameter	Native Sample	MS Added	MS Found	MS %Recovery	Qual	MSD Found	MSD %Recovery	Qual	Recovery Limits	RPD	Qual	RPD Limits
Total Metals - Westborough Lab Associated sample(s): 01-02 QC Batch ID: WG691990-4 QC Sample: L1410884-23 Client ID: MS Sample												
Mercury, Total	ND	0.162	0.28	173	Q	-	-		80-120	-		35
Total Metals - Westborough Lab Associated sample(s): 06 QC Batch ID: WG692680-4 QC Sample: L1410965-01 Client ID: MS Sample												
Mercury, Total	1.2	0.169	1.6	237	Q	-	-		80-120	-		35
Total Metals - Westborough Lab Associated sample(s): 01-02,06 QC Batch ID: WG692746-3 WG692746-4 QC Sample: L1410896-05 Client ID: MS Sample												
Arsenic, Total	3.4	11	14	96		15	105		75-125	7		20
Barium, Total	80	184	240	87		260	98		75-125	8		20
Cadmium, Total	ND	4.68	4.2	90		4.4	94		75-125	5		20
Chromium, Total	7.9	18.4	24	88		25	93		75-125	4		20
Lead, Total	7.2	46.8	48	87		50	91		75-125	4		20
Selenium, Total	ND	11	10	91		11	99		75-125	10		20
Silver, Total	ND	27.5	26	94		28	101		75-125	7		20

Lab Duplicate Analysis
Batch Quality Control

Project Name: LOWELL RESIDUALS
Project Number: 227251.3

Lab Number: L1410895
Report Date: 05/29/14

Parameter	Native Sample	Duplicate Sample	Units	RPD	Qual	RPD Limits
Total Metals - Westborough Lab Associated sample(s): 01-02 QC Batch ID: WG691990-3 QC Sample: L1410884-23 Client ID: DUP Sample						
Mercury, Total	ND	ND	mg/kg	NC		35
Total Metals - Westborough Lab Associated sample(s): 06 QC Batch ID: WG692680-3 QC Sample: L1410965-01 Client ID: DUP Sample						
Mercury, Total	1.2	1.2	mg/kg	0		35

INORGANICS
&
MISCELLANEOUS

Project Name: LOWELL RESIDUALS
Project Number: 227251.3

Lab Number: L1410895
Report Date: 05/29/14

SAMPLE RESULTS

Lab ID: L1410895-01
Client ID: L2S1
Sample Location: LRWU
Matrix: Sludge

Date Collected: 05/20/14 10:00
Date Received: 05/21/14
Field Prep: Not Specified

Parameter	Result	Qualifier	Units	RL	MDL	Dilution Factor	Date Prepared	Date Analyzed	Analytical Method	Analyst
General Chemistry - Westborough Lab										
Solids, Total	14.4		%	0.100	NA	1	-	05/22/14 01:09	30,2540G	RT

Project Name: LOWELL RESIDUALS
Project Number: 227251.3

Lab Number: L1410895
Report Date: 05/29/14

SAMPLE RESULTS

Lab ID: L1410895-02
Client ID: L2S2
Sample Location: LRWU
Matrix: Sludge

Date Collected: 05/20/14 10:00
Date Received: 05/21/14
Field Prep: Not Specified

Parameter	Result	Qualifier	Units	RL	MDL	Dilution Factor	Date Prepared	Date Analyzed	Analytical Method	Analyst
General Chemistry - Westborough Lab										
Solids, Total	1.82		%	0.100	NA	1	-	05/22/14 01:09	30,2540G	RT

Project Name: LOWELL RESIDUALS
Project Number: 227251.3

Lab Number: L1410895
Report Date: 05/29/14

SAMPLE RESULTS

Lab ID: L1410895-03
Client ID: L2S3
Sample Location: LRWU
Matrix: Sludge

Date Collected: 05/20/14 10:00
Date Received: 05/21/14
Field Prep: Not Specified

Parameter	Result	Qualifier	Units	RL	MDL	Dilution Factor	Date Prepared	Date Analyzed	Analytical Method	Analyst
General Chemistry - Westborough Lab										
Solids, Total	18.6		%	0.100	NA	1	-	05/22/14 01:09	30,2540G	RT

Project Name: LOWELL RESIDUALS
Project Number: 227251.3

Lab Number: L1410895
Report Date: 05/29/14

SAMPLE RESULTS

Lab ID: L1410895-04
Client ID: L2S4
Sample Location: LRWU
Matrix: Sludge

Date Collected: 05/20/14 10:00
Date Received: 05/21/14
Field Prep: Not Specified

Parameter	Result	Qualifier	Units	RL	MDL	Dilution Factor	Date Prepared	Date Analyzed	Analytical Method	Analyst
General Chemistry - Westborough Lab										
Solids, Total	1.99		%	0.100	NA	1	-	05/22/14 01:09	30,2540G	RT

Project Name: LOWELL RESIDUALS
Project Number: 227251.3

Lab Number: L1410895
Report Date: 05/29/14

SAMPLE RESULTS

Lab ID: L1410895-05
Client ID: L1S3
Sample Location: LRWU
Matrix: Sludge

Date Collected: 05/20/14 10:00
Date Received: 05/21/14
Field Prep: Not Specified

Parameter	Result	Qualifier	Units	RL	MDL	Dilution Factor	Date Prepared	Date Analyzed	Analytical Method	Analyst
General Chemistry - Westborough Lab										
Solids, Total	1.09		%	0.100	NA	1	-	05/22/14 01:09	30,2540G	RT

Project Name: LOWELL RESIDUALS
Project Number: 227251.3

Lab Number: L1410895
Report Date: 05/29/14

SAMPLE RESULTS

Lab ID: L1410895-06
Client ID: L1S4
Sample Location: LRWU
Matrix: Sludge

Date Collected: 05/20/14 10:00
Date Received: 05/21/14
Field Prep: Not Specified

Parameter	Result	Qualifier	Units	RL	MDL	Dilution Factor	Date Prepared	Date Analyzed	Analytical Method	Analyst
General Chemistry - Westborough Lab										
Solids, Total	0.850		%	0.100	NA	1	-	05/22/14 01:09	30,2540G	RT

Lab Duplicate Analysis
Batch Quality Control

Project Name: LOWELL RESIDUALS
Project Number: 227251.3

Lab Number: L1410895
Report Date: 05/29/14

Parameter	Native Sample	Duplicate Sample	Units	RPD	Qual	RPD Limits
General Chemistry - Westborough Lab Associated sample(s): 01-06 QC Batch ID: WG691520-1 QC Sample: L1410893-01 Client ID: DUP Sample						
Solids, Total	99.8	99.8	%	0		20

Project Name: LOWELL RESIDUALS
Project Number: 227251.3

Lab Number: L1410895
Report Date: 05/29/14

Sample Receipt and Container Information

Were project specific reporting limits specified? YES

Reagent H2O Preserved Vials Frozen on: NA

Cooler Information Custody Seal

Cooler	
A	Absent

Container Information

Container ID	Container Type	Cooler	pH	Temp deg C	Pres	Seal	Analysis(*)
L1410895-01A	Amber 250ml unpreserved	A	N/A	8.7	Y	Absent	AS-TI(180),BA-TI(180),AG-TI(180),CR-TI(180),TS(7),PB-TI(180),SE-TI(180),HG-T(28),CD-TI(180)
L1410895-02A	Amber 250ml unpreserved	A	N/A	8.7	Y	Absent	AS-TI(180),BA-TI(180),AG-TI(180),CR-TI(180),TS(7),PB-TI(180),SE-TI(180),HG-T(28),CD-TI(180)
L1410895-03A	Amber 250ml unpreserved	A	N/A	8.7	Y	Absent	TS(7)
L1410895-04A	Amber 250ml unpreserved	A	N/A	8.7	Y	Absent	TS(7)
L1410895-05A	Amber 250ml unpreserved	A	N/A	8.7	Y	Absent	TS(7)
L1410895-06A	Amber 250ml unpreserved	A	N/A	8.7	Y	Absent	AS-TI(180),BA-TI(180),AG-TI(180),CR-TI(180),TS(7),PB-TI(180),SE-TI(180),HG-T(28),CD-TI(180)

*Values in parentheses indicate holding time in days

Project Name: LOWELL RESIDUALS **Lab Number:** L1410895

Project Number: 227251.3 **Report Date:** 05/29/14

GLOSSARY

Acronyms

EDL - Estimated Detection Limit: This value represents the level to which target analyte concentrations are reported as estimated values, when those target analyte concentrations are quantified below the reporting limit (RL). The EDL includes any adjustments from dilutions, concentrations or moisture content, where applicable. The use of EDLs is specific to the analysis of PAHs using Solid-Phase Microextraction (SPME).

EPA - Environmental Protection Agency.

LCS - Laboratory Control Sample: A sample matrix, free from the analytes of interest, spiked with verified known amounts of analytes or a material containing known and verified amounts of analytes.

LCSD - Laboratory Control Sample Duplicate: Refer to LCS.

LFB - Laboratory Fortified Blank: A sample matrix, free from the analytes of interest, spiked with verified known amounts of analytes or a material containing known and verified amounts of analytes.

MDL - Method Detection Limit: This value represents the level to which target analyte concentrations are reported as estimated values, when those target analyte concentrations are quantified below the reporting limit (RL). The MDL includes any adjustments from dilutions, concentrations or moisture content, where applicable.

MS - Matrix Spike Sample: A sample prepared by adding a known mass of target analyte to a specified amount of matrix sample for which an independent estimate of target analyte concentration is available.

MSD - Matrix Spike Sample Duplicate: Refer to MS.

NA - Not Applicable.

NC - Not Calculated: Term is utilized when one or more of the results utilized in the calculation are non-detect at the parameter's reporting unit.

NI - Not Ignitable.

RL - Reporting Limit: The value at which an instrument can accurately measure an analyte at a specific concentration. The RL includes any adjustments from dilutions, concentrations or moisture content, where applicable.

RPD - Relative Percent Difference: The results from matrix and/or matrix spike duplicates are primarily designed to assess the precision of analytical results in a given matrix and are expressed as relative percent difference (RPD). Values which are less than five times the reporting limit for any individual parameter are evaluated by utilizing the absolute difference between the values; although the RPD value will be provided in the report.

SRM - Standard Reference Material: A reference sample of a known or certified value that is of the same or similar matrix as the associated field samples.

Footnotes

1 - The reference for this analyte should be considered modified since this analyte is absent from the target analyte list of the original method.

Terms

Total: With respect to Organic analyses, a 'Total' result is defined as the summation of results for individual isomers or Aroclors. If a 'Total' result is requested, the results of its individual components will also be reported. This is applicable to 'Total' results for methods 8260, 8081 and 8082.

Analytical Method: Both the document from which the method originates and the analytical reference method. (Example: EPA 8260B is shown as 1,8260B.) The codes for the reference method documents are provided in the References section of the Addendum.

Data Qualifiers

A - Spectra identified as "Aldol Condensation Product".

B - The analyte was detected above the reporting limit in the associated method blank. Flag only applies to associated field samples that have detectable concentrations of the analyte at less than ten times (10x) the concentration found in the blank. For MCP-related projects, flag only applies to associated field samples that have detectable concentrations of the analyte at less than ten times (10x) the concentration found in the blank. For DOD-related projects, flag only applies to associated field samples that have detectable concentrations of the analyte at less than ten times (10x) the concentration found in the blank AND the analyte was detected above one-half the reporting limit (or above the reporting limit for common lab contaminants) in the associated method blank. For NJ-Air-related projects, flag only applies to associated field samples that have detectable concentrations of the analyte above the reporting limit.

C - Co-elution: The target analyte co-elutes with a known lab standard (i.e. surrogate, internal standards, etc.) for co-extracted analyses.

D - Concentration of analyte was quantified from diluted analysis. Flag only applies to field samples that have detectable concentrations of the analyte.

E - Concentration of analyte exeeeds the range of the calibration curve and/or linear range of the instrument.

G - The concentration may be biased high due to matrix interferences (i.e, co-elution) with non-target compound(s). The result should be considered estimated.

Report Format: Data Usability Report

Project Name: LOWELL RESIDUALS
Project Number: 227251.3
Lab Number: L1410895
Report Date: 05/29/14

Data Qualifiers

H - The analysis of pH was performed beyond the regulatory-required holding time of 15 minutes from the time of sample collection.

I - The lower value for the two columns has been reported due to obvious interference.

M - Reporting Limit (RL) exceeds the MCP CAM Reporting Limit for this analyte.

NJ - Presumptive evidence of compound. This represents an estimated concentration for Tentatively Identified Compounds (TICs), where the identification is based on a mass spectral library search.

P - The RPD between the results for the two columns exceeds the method-specified criteria.

Q - The quality control sample exceeds the associated acceptance criteria. For DOD-related projects, LCS and/or Continuing Calibration Standard exceedences are also qualified on all associated sample results. Note: This flag is not applicable for matrix spike recoveries when the sample concentration is greater than 4x the spike added or for batch duplicate RPD when the sample concentrations are less than 5x the RL. (Metals only.)

R - Analytical results are from sample re-analysis.

RE - Analytical results are from sample re-extraction.

S - Analytical results are from modified screening analysis.

J - Estimated value. This represents an estimated concentration for Tentatively Identified Compounds (TICs).

ND - Not detected at the reporting limit (RL) for the sample.

Report Format: Data Usability Report

Project Name:	LOWELL RESIDUALS	**Lab Number:**	L1410895
Project Number:	227251.3	**Report Date:**	05/29/14

REFERENCES

1 Test Methods for Evaluating Solid Waste: Physical/Chemical Methods. EPA SW-846. Third Edition. Updates I - IV, 2007.

30 Standard Methods for the Examination of Water and Wastewater. APHA-AWWA-WPCF. 18th Edition. 1992.

LIMITATION OF LIABILITIES

Alpha Analytical performs services with reasonable care and diligence normal to the analytical testing laboratory industry. In the event of an error, the sole and exclusive responsibility of Alpha Analytical shall be to re-perform the work at it's own expense. In no event shall Alpha Analytical be held liable for any incidental, consequential or special damages, including but not limited to, damages in any way connected with the use of, interpretation of, information or analysis provided by Alpha Analytical.

We strongly urge our clients to comply with EPA protocol regarding sample volume, preservation, cooling, containers, sampling procedures, holding time and splitting of samples in the field.

Certification Information

Last revised April 15, 2014

The following analytes are not included in our NELAP Scope of Accreditation:

Westborough Facility
EPA 524.2: Acetone, 2-Butanone (Methyl ethyl ketone (MEK)), Tert-butyl alcohol, 2-Hexanone, Tetrahydrofuran, 1,3,5-Trichlorobenzene, 4-Methyl-2-pentanone (MIBK), Carbon disulfide, Diethyl ether.
EPA 8260C: 1,2,4,5-Tetramethylbenzene, 4-Ethyltoluene, Iodomethane (methyl iodide), Methyl methacrylate, Azobenzene.
EPA 8330A/B: PETN, Picric Acid, Nitroglycerine, 2,6-DANT, 2,4-DANT.
EPA 8270D: 1-Methylnaphthalene, Dimethylnaphthalene,1,4-Diphenylhydrazine.
EPA 625: 4-Chloroaniline, 4-Methylphenol.
SM4500: Soil: Total Phosphorus, TKN, NO2, NO3.
EPA 9071: Total Petroleum Hydrocarbons, Oil & Grease.

Mansfield Facility
EPA 8270D: Biphenyl.
EPA 2540D: TSS
EPA TO-15: Halothane, 2,4,4-Trimethyl-2-pentene, 2,4,4-Trimethyl-1-pentene, Thiophene, 2-Methylthiophene, 3-Methylthiophene, 2-Ethylthiophene, 1,2,3-Trimethylbenzene, Indan, Indene, 1,2,4,5-Tetramethylbenzene, Benzothiophene, 1-Methylnaphthalene.

The following analytes are included in our Massachusetts DEP Scope of Accreditation, Westborough Facility:

Drinking Water
EPA 200.8: Sb,As,Ba,Be,Cd,Cr,Cu,Pb,Ni,Se,Tl; **EPA 200.7**: Ba,Be,Ca,Cd,Cr,Cu,Na; **EPA 245.1:** Mercury;
EPA 300.0: Nitrate-N, Fluoride, Sulfate; **EPA 353.2**: Nitrate-N, Nitrite-N; **SM4500NO3-F**: Nitrate-N, Nitrite-N; **SM4500F-C, SM4500CN-CE, EPA 180.1, SM2130B, SM4500Cl-D, SM2320B, SM2540C, SM4500H-B**
EPA 332: Perchlorate.
Microbiology: **SM9215B; SM9223-P/A, SM9223B-Colilert-QT, Enterolert-QT.**

Non-Potable Water
EPA 200.8: Al,Sb,As,Be,Cd,Cr,Cu,Pb,Mn,Ni,Se,Ag,Tl,Zn;
EPA 200.7: Al,Sb,As,Be,Cd,Ca,Cr,Co,Cu,Fe,Pb,Mg,Mn,Mo,Ni,K,Se,Ag,Na,Sr,Ti,Tl,V,Zn;
EPA 245.1, SM4500H,B, EPA 120.1, SM2510B, SM2540C, SM2340B, SM2320B, SM4500CL-E, SM4500F-BC, SM426C, SM4500NH3-BH, EPA 350.1: Ammonia-N, **LACHAT 10-107-06-1-B**: Ammonia-N, **SM4500NO3-F,**
EPA 353.2: Nitrate-N, **SM4500NH3-BC-NES, EPA 351.1, SM4500P-E, SM4500P-B, E, SM5220D, EPA 410.4, SM5210B, SM5310C, SM4500CL-D, EPA 1664, SM14 510AC, EPA 420.1, SM4500-CN-CE, SM2540D.**
EPA 624: Volatile Halocarbons & Aromatics,
EPA 608: Chlordane, Toxaphene, Aldrin, alpha-BHC, beta-BHC, gamma-BHC, delta-BHC, Dieldrin, DDD, DDE, DDT, Endosulfan I, Endosulfan II, Endosulfan sulfate, Endrin, Endrin Aldehyde, Heptachlor, Heptachlor Epoxide, PCBs
EPA 625: SVOC (Acid/Base/Neutral Extractables), **EPA 600/4-81-045**: PCB-Oil.
Microbiology: **SM9223B-Colilert-QT; Enterolert-QT, SM9222D-MF.**

For a complete listing of analytes and methods, please contact your Alpha Project Manager.

CHAIN OF CUSTODY

PAGE 1 OF 1

Serial No:05291416:54

Date Rec'd in Lab: 5/21/14

ALPHA Job #: L1416895

8 Walkup Drive, Westboro, MA 01581, Tel: 508-898-9220
320 Forbes Blvd, Mansfield, MA 02048, Tel: 508-822-9300

Client Information

Client: W&C %Sarah Lingley
Address: 40 Shattuck Rd, Suite 110
Andover, MA 01810
Phone: 978-557-8150
Email: SLingley@Woodard Curran.com

Additional Project Information:

Project Information

Project Name: Lowell Residuals
Project Location: LRWU
Project #: 227251.3
Project Manager: Rob Little
ALPHA Quote #: Bottle Order 102886

Turn-Around Time

☒ Standard ☐ RUSH (only confirmed if pre-approved!)
Date Due: 5/29/14

Report Information - Data Deliverables

☐ ADEx ☒ EMAIL

Billing Information

☒ Same as Client Info PO #:

Regulatory Requirements & Project Information Requirements

☐ Yes ☐ No MA MCP Analytical Methods ☐ Yes ☐ No CT RCP Analytical Methods
☐ Yes ☐ No Matrix Spike Required on this SDG? (Required for MCP Inorganics)
☐ Yes ☐ No GW1 Standards (Info Required for Metals & EPH with Targets)
☐ Yes ☐ No NPDES RGP
☐ Other State /Fed Program _____ Criteria _____

ANALYSIS

VOC: ☐ 8260 ☐ 624 ☐ 524.2
SVOC: ☐ ABN ☐ PAH
METALS: ☐ MCP 13 ☐ RCRA5 ☐ RCRA8 ☐ MCP 14 ☐ RCP 15 ☐ PP13
EPH: ☐ Ranges & Targets ☐ Ranges Only
VPH: ☐ Ranges & Targets ☐ Ranges Only
☐ PCB ☐ PEST
TPH: ☐ Quant Only ☐ Fingerprint
% Solids

SAMPLE INFO
Filtration
☐ Field
☐ Lab to do
Preservation
☐ Lab to do

ALPHA Lab ID (Lab Use Only)	Sample ID	Collection Date	Collection Time	Sample Matrix	Sampler Initials	METALS	% Solids	Sample Comments	TOTAL # BOTTLES
10895-01	L2S1	5/20	10am	SG	SHL	✓	✓		1
02	L2S2	5/20	10am	SG	SHL	✓	✓		1
03	L2S3	5/20	10am	SG	SHL		✓		1
04	L2S4	5/20	10am	SG	SHL		✓		1
05	L1S3	5/20	10am	SG	SHL		✓		1
06	L1S4	5/20	10am	SG	SHL	✓	✓		1
Container Type						G	G		
Preservative						A	A		

Container Type
P= Plastic
A= Amber glass
V= Vial
G= Glass
B= Bacteria cup
C= Cube
O= Other
E= Encore
D= BOD Bottle

Preservative
A= None
B= HCl
C= HNO_3
D= H_2SO_4
E= NaOH
F= MeOH
G= $NaHSO_4$
H = $Na_2S_2O_3$
I= Ascorbic Acid
J = NH_4Cl
K= Zn Acetate
O= Other

Relinquished By:	Date/Time	Received By:	Date/Time
Sarah Lingley	5/21 11:30am	[illegible]	5/21/14 11:30
[illegible]	5/21/14 17:35	[illegible]	5/21/14 17:35

All samples submitted are subject to Alpha's Terms and Conditions. See reverse side.

FORM NO: 01-01 (rev. 12-Mar-2012)

Commonwealth of Massachusetts
Executive Office of Energy & Environmental Affairs

Department of Environmental Protection

Northeast Regional Office • 205B Lowell Street, Wilmington MA 01887 • 978-694-3200

DEVAL L. PATRICK
Governor

MAEVE VALLELY BARTLETT
Secretary

DAVID W. CASH
Commissioner

September 8, 2014

Erik Gitschier
Executive Director
Lowell Regional Water Utility
815 Pawtucket Blvd
Lowell, MA 01854

Re: City/Town: Lowell
PWS Name: Lowell Regional Water Utility
PWS ID #: 3160000
Program: System Modifications
Action: System Modification Approval
Activity No.: X262578

Dear Mr. Gitschier:

Please find attached the Northeast Regional Office of the Department of Environmental Protection's Drinking Water Program (MassDEP, or the Department) findings from its review of the permit application for the above referenced project.

With this notification, the Department grants formal approval for the Lowell Regional Water Utility to construct the modifications described in the submittals, subject to the understandings and conditions outlined in the attachment.

Please note that the signature on this cover letter indicates formal issuance of the attached document. If you have any questions regarding this letter, please contact Sean Griffin at (978) 694-3404.

Sincerely,

Sean Griffin
Environmental Engineer
Drinking Water Program

Sincerely,

Thomas Mahin
Drinking Water Section Chief
Northeast Regional Office

cc: MassDEP Drinking Water Program/WQA, 1 Winter Street, Boston MA (no attachment)
Rob Little, Inc., 40 Shattuck Road, Suite 110, Andover, MA 01810

File name: Y:\DWP Archive\NERO\Lowell-3160000-System Modifications-2014-09-08

This information is available in alternate format. Call Michelle Waters-Ekanem, Diversity Director, at 617-292-5751. TDD# 1-866-539-7622 or 1-617-574-6868
MassDEP Website: www.mass.gov/dep

Printed on Recycled Paper

Regulatory Requirement and Criteria

The Massachusetts Drinking Water Regulations under 310 CMR 22.04, require public water systems to obtain the Department's approval for any proposed substantial modifications. As criteria for approval, the public water system must demonstrate that the facilities are in compliance with the Massachusetts Drinking Water Regulations (310 CMR 22.00) (the Regulations) and MassDEP's Guidelines and Policies for Public Water Supplies (the Guidelines). The following presents background information relating to the project, a summary of the permit application and other submittals and correspondence related to the permit, and a summary of the proposed modifications.

Application Summary

On August 15, 2014, the Department received a permit application from the Lowell Regional Water Utility ("Lowell") for modification to the residuals handling facilities at the water treatment plant. The permit application consisted of a transmittal form, a completed permit application form, a cover letter, and a set of plans and specifications. The application was prepared by Robert Little, P.E., a Massachusetts registered professional engineer.

Background

On March 10th, 2014 Lowell exceeded the Total Suspended Solids limit of 50 mg/L (maximum daily) and 30 mg/L (monthly average) as stated in Massachusetts General Permit No. MAG640000. The Department issued a Notice of Noncompliance ("NON") on March 25, 2014 (NON-NE-14-5D007). A condition of the NON was that Lowell submit a report a report to MassDEP discussing findings of an investigation into the violation and submit a plan and schedule to correct the deficiencies.

The report dated May 30, 2014 concluded that the violation was caused by the following factors: lagoon No. 3 (one of the three onsite lagoons) had not been available to receive sedimentation basin solids because it was dedicated to receiving filter backwash and filter-to-waste water from all of the treatment plant filters; the material in lagoon No. 1 required an extended drying cycle due to unfavorable weather related drying conditions; lagoon No. 2 was subjected to an extended fill cycle due to unavailability of lagoons No. 1 and No. 3; and, increased velocity in the supernatant water resulting from excess solids in lagoon No. 2. Recommendations for improvements to the residuals handling facilities were provided to prevent future discharge permit exceedences and these improvements are reflected in the permit application.

Summary of Work

The major details of the work as presented in the information submitted are summarized below.

1. Recycle Pump Station Improvements: The treatment plant has three types of filters, all of which are automatic backwashing (ABW) filters. The maximum daily backwash volume of 909,120 gallons is less than 10 percent (7 percent) of the average raw water volume of 13,000,000 gallons. Plant controls limit the backwash flow rate to 1,210 gpm. The flow rate is required to be less than 10 percent of the instantaneous raw water flow rate entering the plant. Although the peak flow is greater than 10 percent of the flow the 35,000 gallon recycle pump station wet well will be used to equalize the flow during high flow periods to less than 10 percent. Controls will slowly increase and decrease the recycle rate to minimize the impact and to limit the flow rate to 10 percent of raw water forward flow.

   a. Filter Backwash Pumps: Two existing 700 gpm (at 35 feet TDH) vertical turbine pumps will be replaced with two 1,000 gpm (2 85 feet TDH) vertical turbine pumps equipped with variable speed drives.
   b. Recycle Line Relocation: The existing filter backwash recycle line will be redirected from the flocculator basin influent to upstream of the raw water metering and chemical addition vault by installing new 10-in. ductile iron piping.
2. Lagoon Improvements: There are three lagoons at the site. The floor of the third lagoon will be elevated to the floor of lagoons 1 and 2 to allow the installation of an under drain system. All three lagoons will be available for settling of residuals. A decant structure will be installed at the effluent end of each lagoon and be connected to the existing effluent piping along the south end of the lagoons. The under drain system includes a network of 4" perforated PVC pipes bedded in stone beneath a 2' washed sand layer, 8" PVC header pipes and an under drain system located adjacent to Lagoon 3. The under drain will discharge to a pump station that includes two submersible pumps which discharge to the adjacent decant structure (downstream of the weir gate) or to the recycle pump station to provide flexibility of operation. A purge connection with an air compressor fitting has been included on each under drain system to minimize sand blinding at the sand/solids interface. An ISCO 5800 refrigerated/heated sampler will be installed within a pre-fabricated FRP building on a concrete pad. A manhole will be installed over the existing lagoon effluent pipe at a point downstream of all lagoon discharges to provide access to the sampler tubing.
   a. Submersible Pumps: Two 50 gpm (@ 15 feet TDH) submersible pumps will be installed to discharge to the decant structure or recycle pump station.
3. Electrical & Instrumentation Control Systems (EICS) improvements for the following:
   a. Recycle pumps;
   b. Submersible pumps;
   c. TSS sampler.

Approval & Conditions

Pursuant to the Department's authority under 310 CMR 22.04(7) to require that each supplier of water operate and maintain its system in a manner that ensures the delivery of safe drinking water to consumers, this permit is made subject to the following conditions:

1. Changes/Modifications: If there are any changes made to the approved plans or specifications, the applicant must obtain the prior written approval of MassDEP. Any such changes made without prior approval shall constitute a violation of the "Regulations" which may result in legal actions by MassDEP including revocation of this permit, criminal prosecution, court imposed penalties or civil administrative penalties assessed by MassDEP.

2. Recycle Location: The existing recycle location is to the flocculation basin. The new recycle line location will be upstream of the raw water metering and chemical addition. Lowell will keep the existing recycle line location to the flocculation basin in place, but install a ball valve that will remain closed. Lowell shall notify the Department of the intent to use the flocculation location recycle line within 24-hours of doing so.

3. Additional Requirements: As a condition of approval, the applicant shall incorporate the following features into the construction:

   a. Emergency Power: Electricity for new systems will be tied into the existing facility electrical system.

b. Laboratory Equipment and Monitoring Plan: Laboratory equipment and reagents shall be on hand and available to monitor the quality of the water, as required.

c. NPDES Compliance: The applicant/operator shall comply to all requirements of the National Pollutant Discharge Elimination System (NPDES) permit for the lagoon discharge, including but not limited to, monitoring, reporting, test methods and Best Management Practices (BMPs) Plan.

d. Disinfection of Facilities and Equipment: Water in the completed facilities, to include any and all wells, treatment units, piping, and equipment shall be absent of coliform bacteria prior to being placed into service. Prior to being placed in service, all facilities as described above shall be disinfected in accordance with applicable AWWA standards (most recent editions). To determine adequate disinfection, samples from the completed facilities, to include all treatment units, shall be collected and analyzed for coliform bacteria; samples shall be free of any coliforms to demonstrate adequate disinfection. The samples shall be collected no earlier than seven calendar days prior to when the facilities are to be placed on line. All samples shall be collected in accordance with good operating practices and analyzed by a laboratory certified by MassDEP for the analysis of coliform bacteria. All lab reports shall be prepared on MassDEP approved forms. Copies of the laboratory analysis shall be provided to MassDEP for review and approval prior to the final inspection.

e. Water Quality Testing: As necessary, samples of the finished water from the completed water treatment facility and components shall be collected and analyzed for any applicable contaminants. Copies of the test reports shall be provided to the Department as part of the request for final approval. All testing shall conform to the applicable portion of the Regulations.

4. Final Inspection: A Request for a Final Inspection shall be submitted to this office in accordance with MassDEP Policy 88-19 and the Guidelines.

   a. The request shall include a Determination of Compliance prepared by the consulting engineer or water system representative that inspected the work that certifies the following:

      1. that the facility is fully operational, tested, and ready to be placed on line

      2. that the work was completed in accordance with MassDEP's approval,

      3. that all conditions of the approval letter have been met,

      4. that any chemicals meet the requirements of the Guidelines,

      5. that all materials, equipment and technology have received approval for use in drinking water,

      6. that the operations and maintenance procedures have been prepared and are available,

      7. the operators have been trained and are ready to begin operating the facility,

      8. that all alarms have been tested and are operating properly.

   b. A copy of the punch list shall also be provided with request.

c. During the final inspection, the applicant shall demonstrate the proper operation of the facility and equipment, with the facility running to waste.

5. Operation and Maintenance:

   a. An O & M Manual shall be prepared in compliance with DWP Policy 93-02; the manual shall be available at the facility at the time of final inspection and at all times after the facility is approved to go on-line by MassDEP.

   b. The Operations & Maintenance Manual shall include a stand-alone schedule of inspections, testing, and preventative maintenance recommendations shall be provided for all the components of the system. That schedule shall incorporate the recommendations of the equipment manufacturer(s) and the design engineer.

   c. The Operations & Maintenance Manual shall include annual or more frequent performance evaluation of all alarms and signals.

   d. The operation procedures shall specifically address water quality considerations, monitoring, to include non-regulatory monitoring used for process control, and compliance requirements, to include all reporting requirements. The operational procedures shall address recycle rates based on raw water forward flow rates.

   e. Once the O&M manual has been prepared in accordance with these requirements, the applicant shall operate the facilities in accordance with the procedures and complete all recommended maintenance and inspections.

6. Waste Disposal Plan: The applicant/operator shall update the facility Residuals Management Plan in compliance with the Guidelines for Public Water Systems (Chapter 5). The plan shall be provided to MassDEP for review prior to the final inspection.

7. Emergency Planning: The facilities shall be incorporated in the system's emergency response planning.

8. Maintenance of Records: The applicant/operator shall maintain a copy of this letter and the complete permit application for as long as the facilities described herein are in service. The applicant/operator shall maintain all records in compliance with the Filter Backwash Recycling Rule.

This page intentionally left blank

SECTION 01 15 30

PAYMENT AND ADMINISTRATIVE PROCEDURES AND QUALITY REQUIREMENTS

PART 1 – GENERAL

1.01 SUMMARY

A. This Section specifies administrative and procedural requirements relating to payment, the process of contract administration, and the methods of communicating, controlling, and assuring quality, and applies to all Specifications and Drawings.

1. In some paragraphs, checked items indicate those requirements applicable to the Project.

2. Provisions of this Section may be supplemented in the **Specific Project Requirements and Procedures** or other sections of Division 01.

B. Section Includes

1.02 PAYMENT PROCEDURES
Schedule of Values
Payment Procedures
Change Procedures
Measurement and Payment Procedures
Correlation of Submittals

1.03 ADMINISTRATIVE REQUIREMENTS
Project Management and Coordination; Meetings
Documentation of Progress
Submittal Procedures
Closeout Procedures

1.04 QUALITY REQUIREMENTS
Reference Standards and Regulatory Requirements
Qualifications

1.05 ATTACHMENTS

1.02 PAYMENT PROCEDURES

A. Schedule of Values: in accordance with Article 2 of the Standard General and Supplementary Conditions, if any.

1. Provide sufficient detail to allow for determination of the value of the Work at any degree of completion.

☐ For each line item, identify number and title of specification section in accordance with the Table of Contents.

☐ See **Specific Project Requirements and Procedures** for additional requirements.

B. **Payment Procedures:** in accordance with Article 14 of Standard General and Supplementary Conditions, if any.

1. Submit 6 copies of each Application for Payment using the form included in the Project Forms section. Utilize latest approved Schedule of Values for listing items in Application for Payment. Provide supporting documentation for items included in the Application for Payment.

2. Payment Period: at intervals stipulated in the Agreement.

3. Submit an updated Progress Schedule with each Application for Payment.

C. **Change Procedures**: in accordance with Articles 10 and 12 of Standard General and Supplementary Conditions, if any, and forms included in the Project Forms section.

1. Field Order: issued by Engineer or Owner to advise of minor changes in the Work not involving an adjustment to Contract Price or Contract Time as authorized by Paragraph 9.04 of the Standard General and Supplementary Conditions, if any.

2. Change Request: issued by Engineer, Owner or Contractor to request or authorize minor variations and deviations, amendments or supplements to the Contract Documents per Paragraph 3.04 of the Standard General and Supplementary Conditions, if any. Initiate requests for substitute items per Paragraph 6.05 of the Standard General and Supplementary Conditions, if any, using a Change Request.

a. Engineer or Owner to include a detailed description of a proposed change with supplementary or revised Drawings and Specifications, including a change in Contract Times related to the change (with a stipulation for any overtime work required) and the period of time during which the requested price will be considered valid. Prepare and submit an estimate within 15 days.

b. Contractor to describe the proposed change and its full effect on the Work. Describe the reason for the change and the effect on the Contract Price and Contract Time with full documentation (and a statement describing the effect on Work by separate or other contractors). Document any requested substitutions in accordance with the Standard General and Supplementary Conditions, if any.

3. Work Change Directive: issued by Engineer or Owner, signed by Engineer or Owner and instructing Contractor to proceed with a change in the Work. Work authorized in a Work Change Directive will be included in a subsequent Change Order. Document will describe changes in the Work, and designate method of determining any change in Contract Price or Contract Time. Promptly execute the change.

4. Change Order: issued by Engineer or Owner in accordance with Articles 10 and 12 of the Standard General and Supplementary Conditions, if any.

   a. *Stipulated Price Change Order*: based on Contractor's maximum price quotation or Contractor's request for a Change Order as approved by Engineer or Owner.

   b. *Unit Price Change Order*: for pre-determined unit prices and quantities and executed on a fixed unit price basis. Execute Work under a Work Change Directive for unit costs or quantities of work not pre-determined. Changes in Contract Price and Contract Time to be computed as specified for Time and Material Change Order.

   c. *Time and Material Change Order*: based on itemized account and supporting data after completion of change within time limits indicated in the Standard General and Supplementary Conditions, if any. Engineer or Owner and Contractor to determine the change allowable in Contract Price and Contract Time as provided in the Standard General and Supplementary Conditions, if any. Maintain detailed records of work done on this basis, provide full information required for evaluation of proposed changes, and substantiate costs for changes in the Work.

5. Substitutes and "Or Equals": Request substitute items as a Change Request in accordance with subparagraph C.2. above, with complete data substantiating compliance of proposed substitution with Contract Documents.

   a. Substitute items will be processed in accordance with Paragraph 6.05 of the Standard General and Supplementary Conditions, if any, and subparagraph 1.03.C.6 below.

   b. Substitute items will not be considered when indicated or implied on Shop Drawing or material and equipment data submittals without separate written request, or when acceptance will require revision to the Contract Documents.

D. **Measurement and Payment Procedures**

1. Payment includes full compensation for required labor, material and equipment, tools, plant, transportation, services and incidentals; erection, application or installation and construction of an item of the Work; and overhead and profit, unless otherwise indicated.

   ☐ See **Specific Project Requirements and Procedures** for additional requirements.

   ☒ Unit Prices

   a. Unit quantities and measurements indicated in the Bid Form and Bid Form Supplements, if any, are for Contract purposes only. Actual quantities and measurements supplied or placed in the Work determine amount of payment.

   b. Take measurements in presence of Engineer and compute quantities. Engineer or Owner to verify and also take measurements and quantities. Notify Engineer or Owner in advance when measurements must be taken.

   ☐ See **Specific Project Requirements and Procedures** for additional requirements.

E. **Correlation of Submittals**

1. Promptly revise Schedule of Values and Applications for Payment to record each authorized Change Order as a separate line item and adjust the Contract Price.

2. Promptly revise Progress Schedule to reflect any change in Contract Times and revise sub-schedules to adjust time for other items of the Work affected by the change.

3. Promptly enter changes in Project Record Documents.

1.03 ADMINISTRATIVE REQUIREMENTS

A. Project Management and Coordination; Meetings

1. Contact information for Owner and other entities related to the Project and special coordination requirements and contacts during prosecution of the Work **will be provided at the Preconstruction Conference and Site Mobilization Meeting.**

2. Inform Owner and Engineer of the address for sending official correspondence and the address and telephone number of Contractor's representative who will be project manager and Site superintendent for the Contract and identify the 24 hour, 7 days per week emergency response telephone or cell phone number that is staffed by a person (not a passive answering machine) or provide that a phone call will be returned within one hour.

3. During periods of construction and testing keep Owner and Engineer informed in writing with name, address, and telephone number of Contractor's representative who will be responsible and available outside of normal working hours for emergency repairs and the maintenance of safety devices.

4. Identify correspondence, submittals, drawings, data and materials, packing slips or other items associated with this Contract as specified in the **Specific Project Requirements and Procedures**.

5. Coordinate scheduling, submittals, and Work of the various Specifications to effectuate an efficient and orderly sequence for installing interdependent construction elements, with provisions for accommodating items installed later.

6. Preconstruction Conference and Site Mobilization Meeting

   a. Owner to schedule an initial preconstruction conference in accordance with Paragraph 2.06 of the Standard General and Supplementary Conditions, if any.

b. Attendance required by Owner, Contractor, Engineer, Contractor's Superintendent, Project Manager, and Subcontractors as a minimum.

c. Agenda

- Distribute Contract Documents
- Discuss design concepts
- Discuss preliminary Progress Schedule, Schedule of Submittals, Schedule of Values and preliminary cash flow projections.
- Designate personnel representing each party; communication procedures
- Procedures and processing of submittals, substitutions, applications for payments, Change Orders and Contract closeout procedures
- Scheduling
- Use of premises by Owner and Contractor
- Owner's requirements and partial occupancy
- Construction facilities and controls provided by Owner
- Temporary utilities provided by Owner and Contractor
- Survey and Site Layout
- Security and housekeeping procedures
- Schedules
- Procedures for testing
- Procedures for maintaining record documents
- Requirements for start-up
- Inspection and acceptance of equipment put into service during construction period
- Access, laydown and coordination with others

d. Engineer will record minutes and distribute draft copies promptly after meeting to Owner and Contractor for review, then revise as required and distribute thereafter to meeting participants, with copies to Owner and Contractor, and those affected by decisions made.

7. Progress Meetings

a. Owner to schedule progress meetings beginning no later than 60 days after the Initial Conference and continue thereafter on a **monthly** basis throughout progress of the Work.

b. Attendance required by Contractor, Contractor's Superintendent, major Subcontractors and Suppliers, Owner and Engineer as appropriate to agenda topics for each meeting.

c. Agenda

- Review minutes of previous meetings
- Unresolved Issues
- Review Work progress
- Observations, problems, and decisions
- Identification of problems which impede planned progress
- Review of Schedule of Submittals and status of submittals
- Review of off-Site fabrication and delivery schedules
- Maintenance of progress schedule
- Corrective measures to regain projected schedules
- Planned progress during succeeding Work period
- Coordination of projected progress
- Maintenance of quality and Work standards
- Effect of proposed changes on Progress Schedule and coordination
- Other business relating to Work

d. Engineer will record minutes and distribute draft copies promptly after meeting to Owner and Contractor for review, then revise as required and distribute thereafter to meeting participants, with copies to Owner and Contractor, and those affected by decisions made.

8. Pre-installation Conference and Coordination Meetings

a. When required, convene a pre-installation conference at Site before commencing certain Work that requires coordination or has special requirements or approval.

b. Convene coordination meetings as may be generally required.

c. Attendance required by parties directly affecting, or affected by, Work of the specific Specification section.

1) For pre-installation conference, notify Owner and Engineer 5 days in advance.

2) For coordination meetings, party requesting coordination meeting to notify other party(s).

d. Review conditions, preparation and procedures, and coordination with related Work.

B. **Documentation of Progress**

1. Submit preliminary and final Progress Schedules as specified in Paragraphs 2.05 and 2.07 of the Standard General and Supplementary Conditions, if any, or as established in Notice to Proceed.

   a. Show complete sequence of construction by activity, identifying Work of separate stages and other logically grouped activities. Indicate the early and late start, early and late finish, float dates, and duration.

   b. Indicate estimated percentage of completion for each item of Work at each submission.

   c. Indicate dates for fabrication, factory testing, delivery, shipping and field testing, and material and equipment delivery dates, including those furnished by Owner. Coordinate with Schedule of Submittals.

2. Submit revised Progress Schedule on monthly basis and with each Application for Payment, identifying changes since previous version. Coordinate content with Schedule of Values, if any.

3. Documentation of pre-construction conditions, construction progress, and final conditions:

   ☐ Not Required for the Project

   ☒ Construction Photographs: to record Site conditions. Ensure existing conditions of roadway surfaces, curbing, berms, sidewalks, driveways, property bounds, landscaped areas, abutters property and any other items that might be affected by the Work are clearly recorded.

   ☒ Submit prior to starting construction.

   ☐ Submit photographs with Payment Application:
   - ☐ monthly during progress of Work.
   - ☐ for final payment to record final condition.

   Construction photographs: electronic in PDF or JPG format with maximum 4 prints on 8-1/2 by 11 sheets, minimum 300 dpi quality and a minimum resolution of 6.0 megapixels. Identify photographs with date, time, orientation and Project identification.

☐ Digital Video Recording: Video record, in color, all areas of the Project Site. Ensure existing conditions of roadway surfaces, curbing, berms, sidewalks, driveways, property bounds, landscaped areas, abutters' property and any other items that might be affected by the Work are clearly recorded.

☐ Submit prior to the starting construction.
☐ Submit at completion of construction.

Arrange for video recordings to be conducted by a professional video-photographer in digital videodisc (DVD) format. Include clear and concise audio descriptions of the existing Project Site conditions. Submit a copy of the first completed video recording to the Engineer for review of visual and audio quality. Once approved, submit 2 copies of video recordings. Re-record any recording furnished which, in the opinion of the Engineer, are poor quality or incomplete at no additional cost to Owner.

4. Reports

a. Submit weekly Safety Reports signed by the Safety Representative in accordance with Articles 6.13 and 6.14 of the Standard General and Supplementary Conditions, if any.

b. Other reports to be submitted:
☒ None
☐ Specified in **Specific Project Requirements and Procedures**

C. **Submittal Procedures**

1. Schedule submittals to expedite the Project and coordinate with schedules required by Paragraph 1.03.B above. Deliver each submittal in the quantity indicated to Issuing Office (with copy to Owner where required) at the addresses specified **in the Specific Project Requirements and Procedures**. Coordinate submission of related items.

2. Present submittals in a clear and thorough manner, in English and using English units. Use sheet size of not less than 8 1/2 by 11 inches and not more than 24 by 36 inches. Provide space for Contractor, Engineer, and Owner's review stamps.

3. Revise and resubmit documents as required. Identify all changes made since previous submittal. Distribute copies of reviewed submittals to concerned parties. Instruct parties to promptly report any inability to comply with provisions. Submittals not requested on the submittal schedule may not be recognized or processed.

4. Submit preliminary and final Schedule of Submittals as specified in Article 2 of the Standard General and Supplementary Conditions, if any, or as established in Notice to Proceed. Include all submittals specified in the Standard General and Supplementary Conditions, if any,, General Requirements, and other Specification sections.

   a. Include description of each submittal, date by which each submittal will be delivered to Engineer and Owner date by which each submittal must be approved to maintain project schedule, and relevant section reference.

   b. Allow 10-15 days from receipt of submittal/resubmittal for Engineer review of submittals and possible resubmittal.

5. Shop Drawings and Samples: Submit in accordance with Paragraph 6.17 of the Standard General and Supplementary Conditions, if any, and as follows, and coordinate with the Schedule of Submittals required in subparagraph 4 above.

   Number of prints: **1**

   Electronic format: ☒ PDF ☐ DWG ☐ DXF
   ☐ OTHER (as specified in **Specific Project Requirements and Procedures)**

   Submit to Engineer: ☒ by email ☐ on CD

   a. Complete the submittal transmittal form included as an attachment to this Section as is indicated, numbering each submittal consecutively. Assign resubmittals the same transmittal number as the original with a suffix of a sequential letter to indicate the resubmittal (e.g. the first resubmittal of submittal 25 would be number 25A.) Include only those documents previously issued under original transmittal number in resubmittals. Do not combine new submittals with resubmittals.

   b. Attach a transmittal form to each group of Shop Drawings, manufacturer's literature, equipment data and Samples submitted. Use a sufficient number of transmittal forms so that: items on a single transmittal form pertain to the same equipment item, specification section or element of Work; items on a single transmittal form are either original submittals or the same number

resubmittal; and each Sample is listed on a separate transmittal form.

c. Engineer to complete review in accordance with Paragraph 6.17.D. of the Standard General and Supplementary Conditions, if any.

d. Submittals which do not have a fully completed transmittal form will be returned along with unreviewed attachments. Returned submittals, even though incomplete, will be counted as a submittal in accordance with the Supplementary Conditions, if any.

e. Contractor shall reimburse Owner for Engineer's time beyond one re-submittal per the Standard General and Supplementary Conditions, if any.

f. Submission of any Shop Drawing or Sample bearing Contractor's and Engineer's approval shall constitute a representation to Owner that the requirements of Paragraph 6.17 of the Standard General and Supplementary Conditions, if any, have been fulfilled.

6. Variations: Identify variations from Contract Documents and material and equipment or system limitations which may be detrimental to successful performance of the completed Work and identify reasons therefor in accordance with subparagraph 6.17.C.3 of the Standard General and Supplementary Conditions, if any.

a. Clearly identify requests for "Or-Equal" and substitute items and submit per Paragraph 6.05 of Standard General and Supplementary Conditions, if any, and subparagraph 1.02.C.5 above. Substitute items will not be considered when indicated or implied on Shop Drawing or material and equipment data submittals without separate written request, or when acceptance will require revision to the Contract Documents.

7. Manufacturers' Installation Instructions and Certificates: Submit printed instructions for delivery, storage, assembly, installation, start-up, adjusting, and finishing.

Number of prints: **1**

Electronic format: ☒ PDF ☐ DWG ☐ DXF
☐ OTHER (as specified in **Specific Project Requirements and Procedures)**

Submit to Engineer: ☒ by email ☐ on CD

a. Indicate special procedures, perimeter conditions requiring special attention and special environmental criteria required for application or installation.

b. Submit manufacturers' certificates for recent or previous test results on material or equipment, but they must be acceptable to Engineer and Owner. Indicate material or equipment conforms to or exceeds specified requirements and provide supporting reference date, affidavits, and certifications as appropriate.

c. Submit test results, data, and reports and certifications to Engineer based on tests performed. Submit test reports and certifications for independent testing services specified.

8. Record Documents and Closeout Submittals: submit in accordance with Paragraph 6.12 of the Standard General and Supplementary Conditions, if any, and Paragraph 1.03.D below.

a. *As-Builts for Material and Equipment*

Number of prints: **1**

Electronic format: ☐ PDF ☒ DWG ☐ DXF
☐ OTHER (as specified in **Specific Project Requirements and Procedures)**

Submit to Engineer: ☒ by email ☐ on CD

Indicate "As-Supplied" in revision block and sign. Show all changes and revisions to Final Completion per **Execution and Closeout Requirements**.

b. *Conformed to Construction Record Drawings*: Submit for Engineer's use in preparing final Record Drawings.

Number of prints: **1**

Electronic format: ☐ PDF ☒ DWG ☐ DXF
☐ OTHER (as specified in **Specific Project Requirements and Procedures)**

Submit to Engineer: ☒ by email ☐ on CD

Indicate "Conformed by Contractor to Construction Records" in revision block and sign. Show all changes and revisions to Final Completion per **Execution and Closeout Requirements.**

c. *Warranties and Guarantees*: Submit duplicate notarized copies of warranty documents which are executed and transferable from Subcontractors, Suppliers, and manufacturers. For items of Work delayed beyond date of Substantial Completion, provide updated submittal within 10 days after acceptance, listing date of acceptance as start of Warranty Period. Assemble in three ring binders with durable plastic cover with a table of contents.

d. *Operation and Maintenance Data*

1) Submit one draft copy of completed volumes 30 days prior to equipment startup. Include 2 copies of completed manuals with major equipment when equipment is shipped. Draft copies will be reviewed and returned after final inspection, with Engineer's comments. Revise content of all sets as required prior to final submission.

2) Submit 3 copies of final volumes, with electronic files in PDF format on CD, within 10 days after final inspection.

3) Submit data in ring binders with durable plastic covers with 8 1/2 by 11 inch text pages. Cover: title "OPERATION AND MAINTENANCE INSTRUCTIONS", title of Project, and subject matter of binder when multiple binders are required.

4) Subdivide binder contents with permanent page dividers, logically organized as described below with laminated plastic tabs and clearly print the contents. Prepare a Table of Contents for each volume, with material, equipment, or system description identified, in three parts as follows:

Part 1: Directory, listing names, addresses, and telephone numbers of Contractor, Subcontractors, and major equipment Suppliers, and service representative.

Part 2: Operation and maintenance instructions arranged by system and subdivided by Specification section.

For each system, identify names, addresses, and telephone numbers of Subcontractors and Suppliers. Identify the following:

- Significant design criteria
- List of equipment with As-Builts certified "As-Supplied"
- Parts list for each component
- Operating instructions
- Inspection, maintenance and adjustment instructions for equipment and systems
- Lubrication and maintenance schedules
- Maintenance instructions for special finishes, including recommended cleaning methods and materials, and special precautions identifying detrimental agents
- Troubleshooting guides
- Schematic diagrams

Part 3: Material Safety Data Sheets

Part 4: Other Project documents and certificates, including the following:

- Certificates
- Photocopies of warranties

☐ See **Specific Project Requirements and Procedures** for additional requirements.

D. Closeout Procedures

1. Substantial Completion shall have been achieved when the following has been completed and the requirements of Paragraph 14.04 of the Standard General and Supplementary Conditions, if any, have been met.

   a. Work is complete, systems are successfully operating, and final testing has been successfully completed.

   b. A full inventory of the spare parts and special tools purchased by the Owner are replenished and in the custody of the Owner.

   c. The Site has been restored to the satisfaction of the Owner.

   d. An inspection of the Work has been completed by the Engineer and the Owner.

   e. An updated Punch List is provided.

f. The Contractor's written warranty and guarantee has been submitted as required by Paragraph 16.19.D. of the Standard General and Supplementary Conditions, if any.

g. A Certificate of Substantial Completion has been provided in accordance with Paragraph 14.04.C. of the Standard General and Supplementary Conditions, if any.

2. The Contractor shall have sole care, custody, and control of the Work until achievement of Substantial Completion. During the period between Substantial Completion and the date for Final Completion, Contractor shall be given access to correct items on the Punch List and achieve Final Completion.

3. The date of achieving Substantial Completion is the date set forth in the Certificate of Substantial Completion that is accepted and signed by the Owner.

4. Final Completion shall have been achieved when the Work is complete, the requirements of Paragraphs 14.06 and 14.07 of the Standard General and Supplementary Conditions, if any, have been met, and when the following is complete.

a. Substantial Completion has been achieved and liquidated damages for failure to meet Substantial Completion Date have been paid.

b. All Work including Punch List Items has been completed.

c. Final cleaning has been conducted and Contractor equipment and supplies including waste materials have been removed from the Site and legally disposed of.

d. A full set of record documents have been submitted as specified in subparagraph 1.03.C.8 above and Contractor's written warranty and guarantee has been resubmitted if adjusted.

e. Inspections required by Laws and Regulations are complete. Certificates and permits to occupy and operate have been issued if required.

f. Spare parts, maintenance and extra materials have been delivered in quantities specified to Project Site and stored as directed.

g. A request for final inspection in accordance with Paragraph 14.06 of the Standard General and Supplementary Conditions, if any, has been submitted to the Engineer and the inspection has been completed and the results accepted by the Owner.

h. A Certificate of Completion has been provided in accordance with Paragraph 14.07.B of the Standard General and Supplementary Conditions, if any.

i. A Final Application for Payment has been submitted to the Engineer identifying total adjusted Contract Price, previous payments, and balance due along with required documentation in accordance with Paragraph 14.07.A. of the Standard General and Supplementary Conditions, if any.

1.04 QUALITY REQUIREMENTS

A. Reference Standards and Regulatory Requirements

1. Reference to standards, specifications, manuals or codes of any technical society, organization or association, or Laws or Regulations of any governmental authority are used in accordance with Paragraph 3.02 of the Standard General and Supplementary Conditions, if any.

2. Acronyms and abbreviations used are defined in the applicable versions of the Encyclopedia of Associations published by Gale (part of Cengage Learning) generally available in large libraries and on the internet.

☒ See **Specific Project Requirements and Procedures** for additional requirements.

B. Qualifications

1. Meet or provide capability to meet the criteria specified in individual Specification sections in connection with various portions of the Work of the Contract Documents .

2. As a minimum, Contractor shall:

a. have been regularly and actively engaged in similar Work as described in the Contract Documents, operating under the same business name and business organization structure, for the last 5 years on at least 5 projects;

b. have successfully completed at least 3 projects involving construction of similar facilities in the same state as the Project covered by the Contract Documents;

c. have a full-time project manager in responsible charge of the Work with at least 10 years' experience as project manager on comparable projects; and

d. carry at least the insurance coverage and amounts required in Article 5 of the Standard General and Supplementary Conditions, if any.

☒ See **Specific Project Requirements and Procedures** for additional requirements.

1.05 ATTACHMENTS

A. Transmittal form

END OF SECTION

TRANSMITTAL FORM

Owner:		Transmittal No.:	
Project:		Date:	
Contract No.:			
Contract Title:			
Specification Section No.:			

Assign a consecutive, unique number to each submittal and use same on resubmittals. Example: 25 =original submittal; 25A = 1st resubmittal; 25B (and beyond) = additional resubmittals

Submittal (Item) No.	Resubmittal (A B C etc.)	Date	Title/Description	Vendor/Manufacturer	Copies

☐ The material and equipment, and requirements for construction/installation contained in Submittal No.(s) _____ have been reviewed and we certify that they are correct and in strict conformance with the requirements specified (no exceptions or deviations)

☐ The material and equipment and requirements for construction/installation contained in Submittal No.(s) _____ have been reviewed and we certify that they are correct and in strict conformance with the requirements specified except for the following deviations (list below or attach listing):

_____

_____

CONTRACTOR'S NAME_____

ADDRESS_____

BY: _____ DATE: _____

SECTION 01 20 25

MEASUREMENT AND PAYMENT

PART 1 - GENERAL

1.01 DESCRIPTION

A. This Section describes the measurement and payment for the Work to be completed under each item in Section 00 41 02 Form for General Bid, which may also be referred to as "pay item".

B. Payment procedures are in accordance with the Agreement, Article 14 of the General Conditions, the Supplementary Conditions (if any), and the General Requirements.

C. Measurement: as determined, verified, or approved by Engineer or Owner in accordance with Paragraph 11.03 of the General Conditions, the Supplementary Conditions (if any), and the General Requirements, except as otherwise specified.

D. The Work described in each pay item shall be as described in the Specifications and shown on the Drawings and not included in other pay items.

1. Pay item descriptions are general and may not specifically describe all associated Work or elements thereof, do not constitute Specifications, and do not supersede the content of the Specifications and Drawings.

2. Review the Specifications and Drawings for Work associated with each pay item. Claims for being unfamiliar with the content of the Specifications and Drawings will not be considered.

E. The following Work is not specifically described or designated as a pay item, is considered incidental to all pay items, and shall not be measured separately for payment.

1. Division 01 General Requirements EXCEPT those items included as a separate pay item.

2. Materials, equipment, and services necessary to verify existing field conditions and the location, size, type, material, and orientation of existing pipes and utilities shown on the Drawings including test pits.

3. Restoration of all areas disturbed by the Contractor within the limits of Work, including planting.

4. Field and laboratory testing and reporting by independent laboratory, including but not limited to compaction of backfill materials; aggregate gradation; and concrete testing

F. Payment will not be made for restoration of areas disturbed by the Contractor outside the limits of Work.

G. Payment will only be made for those utility services, including water and fire services, specifically identified for replacement on the Drawings. Relocation or replacement for the Contractor's convenience or due to breakage by the Contractor of any other utility services shown on the Drawings, or at locations which could reasonably be assumed, shall be at no cost to Owner.

H. Design, installation and removal of excavation support systems, temporary and permanent utility/structure support systems associated with a pay item shall be considered incidental to that pay item.

I. Additional dewatering and erosion control (including installation, operation, maintenance, removal and off Site disposal of erosion control devices) associated with a pay item shall be considered incidental to that pay item.

1.02 MEASUREMENT AND PAYMENT BASIS

ITEM 1a: Facilities Upgrade (excluding solids removal)	
Measurement	Portion of Work completed and accepted
Payment	Percent of lump sum price based on Schedule of Values
Schedule of Payment	Percent value of Work completed to date
Material and equipment, services, installation, construction and testing inherent to the Work for the Lowell Residual Handling Facilities Upgrade as specified in the contract documents and as shown on the drawings. Excludes solids removal from the lagoons (items 1b – 1d).	

ITEM 1b: Solids Removal from Lagoon 1	
Measurement	As measured by the Engineer within the limits as specified or directed by the Engineer.
Payment	Unit price per ton
Schedule of Payment	Monthly based on progress

Includes all labor, materials, tools, equipment, accessories, appurtenances and disposal fees to satisfactorily complete all excavating, removal and off-site disposal of alum based surface water treatment plant residuals from Lagoon 1 including the following:

1. The removal, transportation and disposal of settled residuals from Lagoon No. 1 in a method approved by Local, State, and Federal regulatory agencies.
2. On site dewatering, or additional material (bulking agent) as required to be mixed with the residuals material to achieve a specific percent solids or other quality requirement for hauling and final disposal at a receiving facility. The weight of added bulking agents shall not be included in the weight submitted for payment of this item.
3. Additional laboratory analysis and/or reporting required by local, state, or federal regulatory agencies for the removal, transportation, and disposal of residuals.
4. The Contractor shall provide weight slips from a state certified scale. Each slip shall indicate trucking company, date, and tare weight. Weight of bulking agent shall be noted and subtracted from request for payment.
5. Sampling, analysis and/or permitting required by the Contractor's receiving facility.

ITEM 1c: Solids Removal from Lagoon 2	
Measurement	As measured by the Engineer within the limits as specified or directed by the Engineer.
Payment	Unit price per ton
Schedule of Payment	Monthly based on progress

Includes all labor, materials, tools, equipment, accessories, appurtenances and disposal fees to satisfactorily complete all excavating, removal and off-site disposal of alum based surface water treatment plant residuals from Lagoon 2 including the following:

1. The removal, transportation and disposal of settled residuals from Lagoon No. 2 in a method approved by Local, State, and Federal regulatory agencies.
2. On site dewatering, or additional material (bulking agent) as required to be mixed with the residuals material to achieve a specific percent solids or other quality requirement for hauling and final disposal at a receiving facility. The weight of added bulking agents shall not be included in the weight submitted for payment of this item.

3. Additional laboratory analysis and/or reporting required by local, state, or federal regulatory agencies for the removal, transportation, and disposal of residuals.
4. The Contractor shall provide weight slips from a state certified scale. Each slip shall indicate trucking company, date, and tare weight. Weight of bulking agent shall be noted and subtracted from request for payment.
5. Sampling, analysis and/or permitting required by the Contractor's receiving facility.

ITEM 1d: Solids Removal from Lagoon 3	
Measurement	As measured by the Engineer within the limits as specified or directed by the Engineer.
Payment	Unit price per ton
Schedule of Payment	Monthly based on progress

Includes all labor, materials, tools, equipment, accessories, appurtenances and disposal fees to satisfactorily complete all excavating, removal and off-site disposal of alum based surface water treatment plant residuals from Lagoon 3 including the following:

1. The removal, transportation and disposal of settled residuals from Lagoon No. 3 in a method approved by Local, State, and Federal regulatory agencies.
2. On site dewatering, or additional material (bulking agent) as required to be mixed with the residuals material to achieve a specific percent solids or other quality requirement for hauling and final disposal at a receiving facility. The weight of added bulking agents shall not be included in the weight submitted for payment of this item.
3. Additional laboratory analysis and/or reporting required by local, state, or federal regulatory agencies for the removal, transportation, and disposal of residuals.
4. The Contractor shall provide weight slips from a state certified scale. Each slip shall indicate trucking company, date, and tare weight. Weight of bulking agent shall be noted and subtracted from request for payment.
5. Sampling, analysis and/or permitting required by the Contractor's receiving facility.

PART 2 - PRODUCTS (not used)
PART 3 – EXECUTION (not used)

END OF SECTION

SECTION 01 50 00

TEMPORARY FACILITIES AND CONTROLS

PART 1 – GENERAL

1.01 SUMMARY

A. This Section specifies temporary facilities and controls for execution of the Work put into place for use only during the period of construction, that will be removed when no longer required for construction operations, and applies to all Specifications and Drawings.

1. In certain paragraphs, checked items indicate requirements applicable to the Project.

2. Provisions of this Section may be supplemented in the **Specific Project Requirements and Procedures** or other sections of Division 01.

B. Section Includes

1.02 TEMPORARY CONSTRUCTION FACILITIES
Barriers
Protection of Work
Security
Safety Facilities
Access Roads
Parking
Field Offices
Staging Area
Project Identification
Progress Cleaning and Waste Removal

1.03 TEMPORARY UTILITIES

1.04 TEMPORARY CONTROLS
Dust Control
Water Control and Dewatering
Erosion and Sediment Control
Noise Control
Pollution Control
Traffic Regulation

1.05 REMOVAL OF TEMPORARY UTILITIES, FACILITIES, AND CONTROLS

1.02 TEMPORARY CONSTRUCTION FACILITIES

A. Barriers

1. Comply with the requirements of Paragraph 6.11. of the Standard General Conditions and Supplementary Conditions, if any.

2. Furnish barriers to prevent unauthorized entry to and clear delineation of construction areas, to allow for Owner's use of Site, and to protect existing facilities and adjacent properties from damage from construction operations as recommended by OSHA and as otherwise required for the protection of life and property during construction.

3. Construct barricades and protective facilities in accordance with local and state regulations. Furnish and install signs, lights, reflectors, and such protection facilities as may be required.

4. Furnish barricades required by governing authorities for public rights of way.

5. Provide protection for plant life designated to remain. Replace damaged plant life.

6. Protect non owned vehicular traffic, stored materials, Site and structures from damage.

7. If required, furnish commercial grade, minimum 8 foot high chain link fence around construction Site. Equip with vehicular gates with locks.

B. Protection of Work

1. Protect Work during working and non-working hours.

2. Provide special protection where specified in Specifications or Drawings and in accordance with manufacturer recommendations.

3. Furnish temporary and removable protection for installed equipment and material. Control activity in immediate Work area to minimize damage.

4. Protect exterior areas of Work from damage. Prohibit traffic from landscaped areas.

5. Buildings and Enclosures

   a. Furnish protective coverings at walls, projections, jambs, sills, and soffits of openings and protect finished floors, stairs, and other surfaces from traffic, dirt, wear, damage, or movement of heavy objects, by protecting with durable sheet materials.

   b. Prohibit traffic or storage upon waterproofed or roofed surfaces. If traffic or activity is necessary, obtain recommendations for protection from waterproofing or roofing material manufacturer.

6. Whenever gale or high winds are forecast, take measures to secure loose material, equipment or other items that could be blown and be damaged or cause damage. Do not leave such loose items unsecured at end of a working day. Particular attention shall be taken with scaffolding and items placed or stored on roofs or within a structure prior to being enclosed.

7. Provide for removal of snow and ice which may impede Work, damage the finishes or materials, be detrimental to workers, or impede trucking, delivery, or moving of materials at the Site, or prevent adequate drainage of the Site or adjoining areas.

C. Security

1. Provide protection to stored items, the Work and Owner's operations from unauthorized entry, vandalism, or theft, and against fire, storms and other losses during working and non-working hours.

2. Coordinate with Owner's security program.

D. Safety Facilities

1. Provide first aid and other safety facilities required by Laws and Regulations during working and non-working hours.

E. Access Roads

1. Construct and maintain temporary roads accessing public thoroughfares to serve construction area. Control dust and water.

2. Extend and relocate as Work progress requires. Provide detours necessary for unimpeded traffic flow.

3. Provide for emergency access and maintain throughout the Work Site.

F. Parking

1. Do not allow construction vehicle parking on existing pavement or sidewalks.

☒ Available parking areas at the Project Site are to be coordinated with the Owner and Engineer.

☐ Off-Site construction parking area to be established at a location determined by Contractor.

G. Field Offices

☒ Delete - not required for the Project.

☐ Provide for the Project as follows.

1. Furnish weather tight office with lighting, electrical outlets, heating, cooling and ventilating equipment, and equip with furnishings and accessories to accommodate supervision of Work, maintenance of records, and project meetings, including, but not limited to the following.

- Desk and chairs (2 cushioned office desk chairs and 4 metal fold chairs)
- Plan table with light and stool
- 3 locking file cabinets
- Hanging plan rack
- Book case with 4 shelves
- "All-in-one" color copier, printer, scanner and fax machine, capable of 11 by 17 output (OR separate color copier, color printer, color scanner, all capable of 11 by 17 output, and fax machine)
- Paper stock for duration of Project
- Telephone with answering machine (or telephone service with voicemail feature)
- Refrigerator, microwave, and water cooler with bottled water supply for duration of Project
- First aid kit

☐ Furnish separate office for use by Engineer and Resident Project Representative similarly equipped with fully functional equipment and furniture.

2. Maintain utilities per Article 1.03 below for the duration of the Project.

3. Location of Field Offices

☒ Delete – not required for the Project.

☐ Locate as shown on the Drawings.

☐ Locate as specified in the **Specific Project Requirements and Procedures**.

H. Staging Area

☐ Locate as shown on the Drawings.

☒ Locate as specified in the **Specific Project Requirements and Procedures**.

☐ Owner is not providing a location for staging area. Determine and secure a location for staging area.

I. Project Identification

☒ Delete - not required for the Project.

☐ Provide for the Project

☐ as specified in the **Specific Project Requirements and Procedures**.

☐ as shown on the Drawings.

J. Progress Cleaning and Waste Removal

1. Comply with the requirements of Paragraph 6.11. B and C of the Standard General Conditions and Supplementary Conditions, if any.

2. Maintain areas free of waste materials, debris, and rubbish and maintain the Site in a clean and orderly condition.

3. Remove debris and rubbish from spaces and other closed or remote spaces before enclosing the space.

4. Collect and remove waste materials, debris, and rubbish from Site at least weekly and legally dispose off-Site.

1.03 TEMPORARY UTILITIES

A. Power service

☒ Delete - not required for the Project.

☐ Provide for the Project as follows.

1. Arrange for and pay for required power service from local electric utility for duration of Project. Exercise measures to conserve energy. Furnish and install required equipment including pole of sufficient height to provide proper clearance and install weatherproof box of such size to house service disconnect, overcurrent protection, electric meter, and other required equipment.

   ☐ Locate as shown on the Drawings.

   ☐ Locate as designated by Owner.

☐ See the **Specific Project Requirements and Procedures** for additional requirements.

B. Telephone service and internet access to field offices

☒ Delete - not required for the Project.

☐ Provide for the Project as follows.

1. Arrange for, pay for, and maintain telephone service and internet access to field offices at time of Project mobilization and for duration of Project.

2. Obtain voicemail feature if answering machine not provided.

3. Provide wireless, high speed broadband internet access via DSL, cable, satellite, or T1.

☐ See the **Specific Project Requirements and Procedures** for additional requirements.

C. Water service

☒ Delete - not required for the Project.

☐ Provide for the Project as follows.

1. Arrange for, pay for and maintain suitable quality water service as required for duration of Project.

   ☐ Owner will provide water at no charge for construction.

☐ See the **Specific Project Requirements and Procedures** for additional requirements.

D. Furnish and maintain required sanitary facilities and enclosures. Do not use existing facilities.

E. Furnish lighting for construction operations. Furnish lighting for exterior staging and storage areas and for security purposes. Maintain lighting and provide routine repairs.

F. Furnish heat devices and heat and cooling devices as required to maintain specified conditions for construction operations.

G. Ventilate enclosed areas to assist cure of materials, to dissipate humidity, and to prevent accumulation of dust, fumes, vapors, or gases.

H. Fire Protection

1. Provide temporary fire protection equipment and services during construction per NFPA and local fire code and regulations, and fire marshal's requirements.

2. Use Work procedures that minimize fire hazards to the extent practicable and materials that are fire resistant where possible. Collect and remove combustible debris and waste materials from the Site each day. Store fuels, solvents, and other volatile or flammable materials away from the construction and storage areas in well-marked, safe containers in accordance with Laws and Regulations.

1.04 TEMPORARY CONTROLS

A. Dust Control: Execute Work by methods to minimize raising dust from construction operations. Provide positive means to prevent air-borne dust from dispersing into atmosphere. Utilize the application of sprinkled water to reduce the emission of air-borne soil particulates from the Project Site.

B. Water Control and Dewatering

☐ Delete - not required for the Project.

☒ Provide for the Project as follows.

☒ See the **Specific Project Requirements and Procedures** for additional requirements.

Grade Site to drain away from excavations to approved drainage collection facilities. Ensure collected surface drainage water meets permitted criteria for sediment content prior to discharge.

1. Maintain excavations free of water. Furnish, operate and maintain pumping equipment.

2. Dewater excavations and legally dispose of water in a manner that will not cause injury to public and private property.

3. Protect Site from puddling, ponding or running water.

4. Design, furnish, install, maintain, operate and remove temporary dewatering systems as required to lower and control water levels and hydrostatic pressures in excavations during construction; legally dispose of pumped water; construct, maintain, observe and, except where indicated or required to remain in place, remove dewatering equipment and system at the completion of construction.

    a. Dewatering may include: lowering the water table, intercepting and collecting seepage which may penetrate the support of excavation, slopes or bottom of the excavation; increasing the stability of excavated slopes; preventing loss of material from beneath the slopes or bottom of the excavation; reducing lateral loads on sheeting and bracing; limiting horizontal displacements and stresses in support of excavation to tolerable and allowable levels; preventing displacements of existing structures, utilities, pavements, and sidewalks; improving the excavation and hauling characteristics of sandy soil; preventing rupture or heaving of the bottom of any excavation; and disposing of pumped water.

b. *Normal dewatering* is defined as using conventional pumps installed in open excavations, ditches, or sumps to control water and allow for installation of the pipe in a dry trench.

c. *Special dewatering* is defined as installing wellpoints, deep wells, or eductor and ejector systems to control groundwater and hydrostatic pressures to allow for installation of the work. Special dewatering includes design of the dewatering system by a Professional Engineer currently registered in the state where the Project is located in good standing, and conducting additional borings or subsurface explorations deemed necessaryby the Contractor, and approved by the Engineer, to support design.

1) For Special Dewatering, retain the services of a Professional Engineer currently registered in the state where the Project is located in good standing, experienced in design of dewatering systems, to independently evaluate the boring logs and other soils information available to determine those areas that will require special dewatering techniques and to design the required system. If, in the opinion of the Contractor or Contractor's Dewatering Professional Engineer, additional borings are needed to design special dewatering systems or determine areas where special dewatering techniques will be required, the Contractor shall retain and pay for the services of a boring subcontractor. Contractor's Dewatering Professional Engineer shall provide sufficient on-Site inspection and supervision to assure that the dewatering is carried out in accordance with the approved design.

d. Design a dewatering system capable of:

1) effectively reducing the hydrostatic pressure and lowering the groundwater levels to a minimum of 2 feet below excavation subgrade in the existing fills and any organic peat, and below the excavation subgrade in the existing organic silts/clays unless otherwise directed by the Engineer, so that all excavation bottoms are firm and dry;

2) maintaining a dry and stable subgrade until the structures, pipes, appurtenances, and drainage pipe and structure bedding to be built therein have been completed to the extent that structures, pipes, and appurtenances will not be floated or otherwise damaged;

3) lowering of the groundwater level within the work area without adversely affecting existing structures, utilities, pavements, sidewalks or wells outside of the Work area.

e. Submit the following.

1) Plans and description of the Normal and/or Special Dewatering systems, including the number, location and depth of wells, wellpoints or sumps; designs of filters to prevent pumping of fine soil; method and location for filtering, sedimentation tanks and legal disposal of pumped water; and flow capacity of proposed system, accounting for groundwater level relative to tide cycles if applicable

2) Design calculations, description and complete layout drawings, stamped and signed by Contractor's Dewatering Professional Engineer, at least two weeks prior to scheduled installation of Special Dewatering system

3) Locations of observation wells

4) Records of pump operation and groundwater elevations

5. Dewatering Operations and Procedures

a. Provide electrically operated dewatering equipment, powered with independent generators adequately sized to operate the dewatering system and capable of running on commercial power. Provide standby equipment independent of commercial power and provide for dewatering within 24 hours upon primary pump or power failure. No work shall be performed by the Contractor below the pre-construction groundwater level during dewatering system failure.

b. Provide suitable temporary pipes, flumes or channels for water that may flow along or across the Site of the Work.

c. Provide dewatering equipment with noise attenuation systems capable of meeting the governing noise regulation requirements.

d. Encapsulate the suction end of the pump with crushed stone, filter fabric, and other materials to minimize the amount of silt discharged to the amount allowed by the construction dewatering permit.

e. Do not operate equipment on paved surfaces to prevent damaging these surfaces.

f. Locate dewatering facilities to prevent interference with utilities and construction work to be done by others.

g. For dewatering operations with relatively minor flows, direct pump discharges using filtration bag or system per Erosion and Sediment Control below, or pump into hay bale sedimentation traps lined with filter fabric. Filter water through the hay bales and filter fabric prior to seepage into storm drainage or any natural water course.

h. For dewatering operations with larger flows, provide pump discharges into a steel dewatering/sedimentation basin. Use steel baffle plates to slow water velocities, to increase the contact time, and allow adequate settlement of sediment prior to discharge into waterways, storm drainage or discharge point allowed by the construction dewatering permit.

i. Utilize silt sacks in catch basins when excess silt is suspended in the discharge water per Erosion and Sediment Control below.

j. If siltation basin is used, size to effectively filter for the volume and discharge rate of water anticipated without overflow.

k. Provide treatment necessary to prevent discharge of silty and/or contaminated ground water caused by the Contractor's operations, or any contaminated ground water that may pass from excavated surfaces and/or through the excavation support system selected by the Contractor.

l. Dispose of water pumped or drained from the Work in accordance with permit requirements and in a manner to prevent undue interference with other work or damage to adjacent properties, pavements and other surfaces, buildings, structures and utilities.

m. Obtain necessary regulatory approvals for the disposal of dewatering flows, including, among others, approval by the Environmental Protection Agency under the National Pollutant Discharge Elimination System (NPDES) program for construction dewatering activities. Submit the completed and approved construction dewatering permit to the Engineer immediately upon receipt.

6. Special Dewatering

a. Use Special Dewatering as necessary if Normal Dewatering methods are inadequate to ensure dry and stable excavation subgrade conditions.

b. Special Dewatering techniques may consist of one- or two-stage wellpoint systems, deep wells, or eductor and ejector type systems. Design with suitable screens to prevent pumping of fines and to address specified Work Site conditions.

c. In areas requiring special dewatering, lower the groundwater level to a minimum of 2 feet below the existing fill and/or organic peat subgrades or to the excavation subgrade for organic silt/clay subgrades prior to any installation and maintain that groundwater level until the excavation has been backfilled and provide monitoring by Contractor's Dewatering Professional Engineer to ensure conformance with the requirements herein.

d. Furnish materials and install at least two observation wells at each excavation area. The location of the wells shall be proposed in the field by the Contractor's Dewatering Professional Engineer and reviewed and approved by the Engineer.

C. Erosion and Sediment Control

☐ Delete - not required for the Project.

☒ Provide for the Project as follows.

☒ See the **Specific Project Requirements and Procedures** for additional requirements.

1. Plan and execute construction using methods to control surface drainage from cuts and fills, from borrow and waste disposal areas and prevent erosion and sedimentation.

2. Submit erosion and sediment control plan to Engineer prior to the start of construction.

3. Install erosion and sediment controls as may be shown on the Drawings and as required by Laws and Regulations. Install additional erosion and sedimentation control measures beyond those shown on the Drawings as necessary to stabilize the Site. Coordinate temporary erosion controls with permanent erosion controls to the extent practical. Provide and maintain devices to control erosion, siltation, and sedimentation that occur during construction operations. Undertake reasonable precautions and measures to avoid erosion of soil and to prevent silting of drainage ditches, storm sewers, rivers, streams, and lakes.

4. Employ pollution prevention measures, erosion and sedimentation control before, during, and after soils are exposed. Implement measures prior to soil disturbance or soil storage to the extent possible to ensure that such measures are in place before activity occurs and employ additional measures as the Work progresses. Implement and maintain as necessary until the Site is permanently stabilized.

5. Perform inspections of disturbed soil areas, material storage areas exposed to precipitation, and erosion control measures with Engineer a minimum of once every 14 days and also within 24 hours after any storm event greater than 0.5-inches of rainfall. Immediately correct deficiencies in the erosion control measures identified or indicated by failures or erosion by implementing additional measures or different techniques to correct and prevent subsequent erosion at no additional cost to Owner.

6. In the event that silt or debris breaches erosion control, immediately remove and clean silt or debris from drainage ditches and storm sewers and revise erosion control measures as required by the Conservation Commission or the Engineer. Should silt or debris breach erosion controls and reach rivers, streams or lakes, immediately notify local, state or Federal representatives as required and implement required remediation methods at no additional cost to Owner.

7. Limit duration of the exposure of soils on embankments, excavations, and graded areas to a minimum.

8. Provide temporary measures such as berms, dikes and drains to prevent water flow. Install erosion control measures in any ditch, swale or channel before water is allowed to flow in the waterway. Handle water pumped from trenches to minimize discharge of silty water to the maximum extent practicable.

9. Stabilize storm drain outfalls as shown on the Drawings before the discharge points become operational. Install inlet protection immediately upon construction of culverts.

10. Stabilize disturbed areas with temporary and permanent erosion control practices as soon as practicable, but no more than 14 days after construction activity on a particular portion of the Site has temporarily or permanently ceased. Exceptions to this time requirement include: a) where construction activities will resume on the particular portion of the Site within 21 days; and b) where snow cover delays initiation of stabilization measures.

11. Place stockpiled topsoil on the Site away from natural drainages, in piles with side slopes of 50 percent to 70 percent. Install siltation fence around the base of the pile to prevent eroding soil from washing into drainages. Cover topsoil piles which are to remain for a period of 21 days or more with temporary seed and mulch immediately following stockpiling.

12. Conduct pavement sweeping to remove sediment and soil debris accumulation on pavement resulting from construction activity

13. Siltation/Silt Fence

    a. Filter fabric: suitable for erosion control.

    b. Wood posts: oak, 2 inches by 2 inches in section, and at least 4.5 feet in length.

    c. Erosion control fencing: heavy-duty filter fabric towed into the existing soil as shown on the Drawings.

    d. Construct as shown on Drawings or as directed by Engineer. Install parallel to contours where possible, prior to Site clearing and grading activities.

        1) Dig a 6 inch by 6 inch minimum trench where the fence is to be installed. Position the fence in the trench with the fence posts set at 8 feet on center (maximum). Curve ends of fence uphill to prevent flow around ends.

        2) Staple sedimentation control fabric and the industrial netting to each post. When joints are necessary, splice filter fabric together only at support posts with 6-inch overlap and securely seal.

        3) Bury lower edge of fabric at least 6 inches below ground surface to prevent underflow. Backfill trench and compact soil over filter fabric.

        4) Installed height: minimum 2.5 feet and 36 inches maximum.

        5) Inspect frequently; repair or replace any damaged sections.

14. Temporary Erosion Control Matting

    a. Rolled matting blanket consisting of curled wood excelsior, coconut fiber, straw or paper bound with a weave of twisted craft paper, cotton cord or plastic mesh.

b. Provide staples for fastening matting to the ground. Staples: fabricated in a "U" shape from 11 gage or heavier stiff steel wire, 6 to 12 inches in length and 1 to 2 inches across.

c. Surface Preparation and Installation

1) Conform to grades and cross sections for slopes and ditches shown on the Drawings. Finish to a smooth and even condition with all debris, roots, stones, and lumps raked out and removed. Loosen soil surface to permit bedding of the matting.

2) Unless otherwise directed, apply seed prior to placement. When directed, spread additional seed over matting, particularly at those locations disturbed by building slots. Press matting onto the ground with a light lawn roller or by other similar means.

3) Bury edges of matting around the edges of catch basins and other structures.

15. Seeding

a. Select seed variety and applied rates based upon the date of application per the following table. Equivalent seed mixture based on suitability for use in controlling erosion of the various soil types and slopes may be used as approved by the Engineer.

Dates	Seed	Applied Rate (pounds per 1,000 feet^2)
4/1 to 7/1 8/15 to 9/15	Oats	1.8
4/1 to 7/1	Annual Ryegrass	0.9
5/15 to 8/15	Sundangrass	0.9
9/15 to 10/15	Winter Ryegrass	2.6

1) Sow seed at the rates indicated, on the pure live seed basis.

2) Mulch areas where temporary seeding has been applied. Do not mulch seeded areas where matting will be immediately installed. If temporary seeding does not achieve adequate growth by November 1, apply an additional layer of mulch.

3) Mulch temporarily or permanently seeded areas, areas which cannot be seeded within the recommended seeding dates, and any soil stockpile areas, immediately following seeding. Straw or hay mulch, wood fiber mulch, and hydromulch are recommended.

16. Sod: grown from certified seed of adapted varieties to produce high quality sod free of any serious thatch, weeds, insects, diseases and other pest problem, be at least one year old and not older than three years, and cut with a 1/2 inch to 1 inch layer of soil.

    a. Lay sod strips on the prepared soil, perpendicular to the slope or direction of water flow, starting at the lowest elevation. Butt the edges and ends of the sod strips together and tamp or roll. Stagger joints.

    b. Staple sod strips at ends and at 3-foot intervals along the center of the strip.

    c. Irrigate sodded area immediately after installation.

17. Catch Basin Silt Sacks

    a. Style: Silt Sack Regular Flow.

    b. Test Method: ASTM D-4884 165.0 lbs./inch.

    c. Silt sack seams: certified average wide width strength.

    d. Meet the following ASTM D-4884 standards. Properties are Minimum Average Roll Values (MARV).

Property	Test Method	Units	Test Results
Grab Tensile	ASTM D-4632	lbs.	315x300
Grab Elongation	ASTM D-4632	%	15x15
Puncture	ASTM D-4833	lbs.	125
Mullen Burst	ASTM D-3786	psi	650
Trapezoid Tear	ASTM D-4533	lbs	120x150
UV Resistance	ASTM D-4355	%	90
Apparent Opening	ASTM D-4751	US Sieve	40
Flow Rate	ASTM D-4491	gal/min/ft^2	40
Permittivity	ASTM D-4491	sec -1	0.55

    1) Utilize silt sacks in catch basins as required when excess silt is suspended in discharge water.

18. Filtration Bag or System for Discharge from Excavation Dewatering

    a. Meet the following standards. Properties are Minimum Average Roll Values (MARV).

Property	Test Method	Units	Test Results
Flow Rate	ASTM D-4491	gal/min/ft^2	40
Permittivity	ASTM D-4491	sec -1	0.55

b. For discharge from excavation dewatering, install filtration bag or system or dewatering siltation basin constructed of a hay bale barrier lined with filter fabric sized to handle the volume of dewatering without overflowing.

19. Compost Filter Socks

a. Furnish and install biodegradable mesh "socks" filled with mature, clean compost per EPA National Pollutant Discharge Elimination System (NPDES) specifications.

1) Install per EPA and manufacturers recommendations.

2) Install parallel to contours where possible. Stake socks as needed to stabilize. Inspect frequently and repair as necessary.

20. Provide detention basins or water filtration systems for dewatering and coordinate locations with Engineer. See Dewatering in Paragraph B. above.

21. Other Temporary Measures

a. Provide and maintain temporary slope drains as required.

b. Employ other temporary erosion control measures as directed by the Engineer or local Conservation Commission.

22. Maintenance

a. Inspect erosion control practices immediately after each rainfall and at least daily during prolonged rainfall or snowmelt for damage. Make appropriate repairs or replacement until Final Completion at no additional cost to the Owner.

b. Remove silt from siltation fence and/or haybale when it has reached one-quarter of the bale and/or fence height, or prior to expected heavy runoff or siltation.

c. Repair matting if any staples become loosened or raised, or if any matting becomes loose, torn, or undermined, make satisfactory repairs immediately.

d. Maintain areas mulched or matted until Final Completion, at no additional cost to the Owner.

e. Maintain sediment basins by removing silt that reaches a depth of over one foot, at no additional cost to the Owner, until Final Completion.

23. Removal of Temporary Erosion Control

a. Remove temporary materials and devices upon completion of the Work when permanent soil stabilization has been achieved. Re-use materials in good condition if approved by Engineer.

1) If silt socks are used, remove in paved areas or cut open and disperse media in unpaved areas.

b. Level and grade to preconstruction conditions and to the extent required to prevent any obstruction of the flow of water or any other interference with the operation of or access to the permanent works.

c. Remove siltation fences only when adequate grass growth has been established.

d. Repair areas damaged by silt fences and hay bales to preconstruction conditions to the satisfaction of the local Conservation Commission and the Engineer.

e. Remove unsuitable materials from Site and dispose of in a lawful manner.

D. Noise Control

1. Provide methods, means, and facilities to minimize noise from construction operations.

2. Provide noise attenuation systems capable of meeting the Department of Environmental Protection Division of Air Quality Control regulations governed by the following policy:

"A source of sound will be considered to be violating the Department's noise regulation (310 CMR 7.10) if the source:

- *Increases the broadband sound level by more than 10 dB(A) above ambient, or*
- *Produces a "pure tone" condition when any octave band center frequency sound pressure level exceeds the two adjacent center frequency sound pressure levels by 3 decibels or more.*

"These criteria are measured both at the property line and at the nearest inhabited residence. Ambient is defined as the background A-weighted sound level that is exceeded 90% of the time measured during equipment operating hours. The ambient may also be established by other means with the consent of the Department."

3. Construct sound enclosures or utilize other noise reduction techniques if the equipment does not meet the noise level requirements.

E. Pollution Control

☐ Delete - not required for the Project.

☒ Provide for the Project as follows.

☐ See the **Specific Project Requirements and Procedures** for additional requirements.

1. Provide methods, means, and facilities to prevent contamination of soil, water, and atmosphere from discharge of noxious, toxic substances, and pollutants produced by construction operations.

a. Water Pollution Control

1) Assure that sediment, debris, petroleums, chemicals, or other contaminants will not enter existing drainage facilities and channels. Use construction methods that will prevent entrance of pollutants and wastes into existing streams, rivers, lakes, and flowing and dry watercourses.

2) Obtain legal disposal sites and dispose of pollutants and wastes in a legal manner.

3) Respond immediately to emergencies as directed when water quality of existing streams, rivers, lakes and flowing and dry watercourses is threatened. Take corrective action to remove or contain pollutants until a permanent solution is determined.

b. Air Pollution Control

1) Equipment and vehicles that exhibit excessive exhausts emissions due to poor engine adjustments or inefficient operation will not be permitted to operate until corrective repairs or adjustments are made.

2) Burning of materials from clearing or grubbing operations, combustible construction materials, and rubbish will not be allowed.

F. Traffic Regulation

☐ Delete - not required for the Project.

☐ See the **Specific Project Requirements and Procedures** for additional requirements.

☒ Provide for the Project as follows.

1. Control and maintain traffic within the Project area.

   ☒ Submit traffic control plans and coordinate with Owner and local agencies. Submit plan for traffic control to Owner for review 14 days in advance of any Work within public right-of-way, street closure or detour.

   ☐ A traffic control plan is not required for the Project.

2. Provide and maintain traffic control and maintenance devices in accordance with Part 6, Temporary Traffic Control, of the "*Manual on Uniform Traffic Control Devices for Streets and Highways*", published by the U.S. Department of Transportation, Federal Highway Administration and other applicable codes and standards as specified. Operate devices 24 hours per day as required.

3. Provide for access by emergency vehicles, such as police, fire, and disaster units at all times. Contractor shall be liable for damages resulting from failure to provide such access.

4. During construction hours, traffic flow must be controlled by uniformed traffic police officers or other traffic controllers allowed by Laws and Regulations. The services of traffic controllers shall in no way relieve the Contractor of its responsibilities under the Contract.

5. Maintain minimum of one moving lane on roadways at all times.

   a. Where detours are permitted, provide necessary barricades, flashers, flashing arrows and signs in accordance with referenced Manuals and Laws and Regulations.

   b. Provide gravel borrow and bituminous concrete to maintain temporary passable travel lane ramps, temporary bridging, steel plates, temporary pavement, wood-framed walkways, caution, safety and other necessary signs directing the pedestrian and vehicular traffic towards unblocked and safe areas.

6. Provide safe access/egress to businesses and abutting property owners within the Project area. In areas where the construction activity is in progress, install directional signs in front of businesses indicating "OPEN FOR BUSINESS" or similar for guidance of customers.

   a. Certain construction operations such as utility work and roadway/sidewalk reconstruction may restrict access/egress on some roads and to businesses and abutting property owners. Under these circumstances, schedule operations during off-peak hours or late evenings with Owner approval so that a particular work activity can be completed in the shortest possible time.

   b. Provide 48 hours notice to businesses and abutting property owners when access/egress will not be available or restrictions will exist.

7. Exercise particular care to establish and maintain such methods and procedures that will not create hazards.

   a. Remove or properly cover traffic control, safety devices and/or signs having messages that are irrelevant to normal traffic conditions at the end of each Work period. Keep signs clean at all times and provide that legends are distinctive and unmarred.

   b. Place excavated material and construction equipment so that vehicular and pedestrian traffic is maintained at all times unless road closure permit is obtained. If the Contractor's operations cause traffic hazards, implement appropriate safety measures immediately.

   c. In areas of high pedestrian and vehicular traffic volume, the remove waste materials and construction equipment from the Work Site on a daily basis. Do not park construction equipment overnight on the Site or the adjacent roads unless permitted by Owner.

   d. Provide night watchmen where special hazards exist.

8. Post signage clearly stating that any vehicle impeding the progress of construction will be towed at the vehicle owner's expense. Towing charges incurred by Owner for Contractor's failure to post such signs will be borne by the Contractor.

1.05 REMOVAL OF TEMPORARY UTILITIES, FACILITIES, AND CONTROLS

A. Remove temporary utilities, equipment, and facilities before Final Application for Payment inspection.

B. Remove temporary underground installations and grade Site as indicated. Clean and repair damage caused by installation or use of temporary utilities, facilities, and controls.

C. Restore existing facilities and areas used during construction to original condition. Restore permanent facilities used during construction to specified condition.

END OF SECTION

SECTION 01 60 00

PRODUCT REQUIREMENTS

PART 1 – GENERAL

1.01 SUMMARY

A. This Section specifies general requirements for products, materials and equipment and applies to all Specifications and Drawings.

1. Provisions of this Section may be supplemented in individual Specification sections.

B. Section Includes

1.02 SOURCE QUALITY CONTROL
General
Independent Testing Agency Certification
Factory Testing

1.03 PRODUCT REQUIREMENTS
General
Transportation and Handling
Storage and Protection

1.04 WARRANTIES

1.02 SOURCE QUALITY CONTROL

A. General

1. Subject material and equipment furnished under the Contract Documents to a complete factory testing program as specified.

2. Shop Drawings and submittals: reviewed by Engineer before initiating testing program.

3. Perform checks and tests in accordance with manufacturer's recommendations and referenced standards.

4. Evaluate test results and advise Owner immediately of any discrepancy between test results and test limits or the failure of any device or system under test. Include test limits for acceptability applicable to each test on the certified test records.

5. Record test information, including the evaluation of testing results, on forms approved by Owner and Engineer.

B. Independent Testing Agency Certification

1. If specified, furnish certificates from an independent testing agency.

2. Independent testing agency to certify that material and equipment components have been examined and tested and are in conformance with the requirements specified in the Contract Documents.

3. Take Samples in accordance with the requirements specified in the Contract Documents, as selected by Owner or independent testing agency. Furnish and ship at no additional cost to Owner.

C. Factory Testing

1. Provide 14 days prior written notice of factory inspections and tests to Owner and Engineer.

2. If failure to give proper written notice results in material and equipment being assembled or covered before a factory inspection or test, make material and equipment ready for inspection or test and reassemble or recover at no additional cost to Owner.

3. Owner may inspect any portion of material and equipment furnished at any reasonable time during manufacture and may witness testing of any portion of material and equipment wherever located. Owner and Engineer to witness tests only.

4. Furnish, set up and operate test equipment and facilities.

5. If facilities for conducting required tests are unavailable to the manufacturer, conduct tests elsewhere or have them performed by an independent agency approved by Owner.

6. Protect material and equipment after testing and checking to provide that subsequent testing of other equipment or systems does not disturb, damage or otherwise interfere with functional capability of material and equipment.

7. Assume responsibility for protection of material and equipment and safety of all personnel during factory testing program.

8. Grounds for rejection: failure to withstand tests; failure to meet ratings; failure to meet applicable standards.

9. In the event of failure

   a. Submit revisions of documents requiring approval for changes required for rectification.

   b. Obtain Owner's and Engineer's approval before making such changes.

   c. Provide written details of any changes to be made not requiring approval.

   d. Notify Owner and Engineer in writing before retesting.

   e. Furnish new material and equipment which meets requirements of the Specifications if rejected material and equipment cannot be rectified to satisfaction of Owner and Engineer.

   f. Retest after rectification in presence of Owner or Engineer.

10. Assume responsibility for all costs, including, but not limited to: loss or damage to materials and equipment resulting from testing; retesting; rectification; new material and equipment to replace damaged or non-rectifiable material and equipment; removal, furnishing, transportation, unloading, and installation of replacement material and equipment; and witness of testing by Owner and Engineer including travel, lodging, meals, and payroll.

11. Submit certified test reports which define tests, list results, and are signed by Contractor's representative, and copies of raw data collected during tests. Submission of certified test reports does not relieve Contractor of responsibility for material and equipment meeting requirements of the Contract Documents after installation.

1.03 PRODUCT REQUIREMENTS

A. General

1. Products include new material and equipment incorporated into the Work and may also include existing material and equipment required for reuse. This does not include machinery and equipment used for preparation, fabrication, conveying, installation and erection of the Work.

2. Do not use materials and equipment removed from existing Work Site, except as specifically permitted.

3. Provide complete with accessories, trim, finished, safety guards, and other devices and details need for a complete installation and for the intended use or effect.

4. Provide standard products which have been produced and used successfully on other similar projects for similar applications. Provide products which are likely to be available to Owner in the future for items required for maintenance and repair or replacement Work.

5. Furnish interchangeable components of the same manufacturer, for similar components.

B. Transportation and Handling

1. Transport and handle material and equipment in accordance with manufacturer's instructions.

2. Notify Engineer and Owner in writing upon acceptance of a shipment.

3. Promptly inspect shipments to assure that material and equipment comply with requirements, quantities are correct, and material and equipment are undamaged.

4. Furnish equipment and personnel to handle material and equipment by methods to prevent soiling, disfigurement, or damage.

5. Uncrate equipment and dispose of packing material properly.

C. Storage and Protection

1. Store and protect material and equipment in accordance with manufacturer's instructions, with seals and labels intact and legible. Store sensitive material and equipment in weather tight, climate controlled enclosures.

2. For exterior storage of fabricated material and equipment, place on sloped supports, above ground.

3. Provide for bonded off Site storage and protection when Site does not permit on Site storage or protection.

4. Cover material and equipment subject to deterioration with impervious sheet covering. Furnish ventilation to avoid condensation or potential degradation of material and equipment.

5. Store loose granular materials on solid flat surfaces in a well-drained area. Avoid mixing with foreign matter.

6. Furnish equipment and personnel to store material and equipment by methods to prevent soiling, disfigurement, or damage.

7. Arrange storage of material and equipment to permit access for inspection. Periodically inspect to assure material and equipment are undamaged and are maintained in acceptable conditions.

8. After receipt of material and equipment, assume responsibility for loss and damage including but not limited to breakage, corrosion, weather damage, and distortion.

1.04 WARRANTIES

A. Provide warranties for equipment and material in accordance with Paragraphs 6.19 and 14.03 of the Standard General and Supplementary Conditions, if any.

B. Provide extended or special warranties as indicated in individual Specification sections.

END OF SECTION

This page intentionally left blank

SECTION 01 70 00

EXECUTION AND CLOSEOUT REQUIREMENTS

PART 1 – GENERAL

1.01 SUMMARY

A. This Section specifies general execution requirements and startup/commissioning and performance testing for closeout of the Work and applies to all Specifications and Drawings

1. In certain paragraphs, checked items indicate requirements applicable to the Project.

2. Provisions of this Section may be supplemented in the **Specific Project Requirements and Procedures** or other sections of Division 01.

B. Section Includes

1.02 OVERALL EXECUTION REQUIREMENTS
Coordination
Existing Conditions
Field Engineering
Record Documents
Cutting and Patching
Electrolytic Corrosion Prevention
Quality Assurance and Control of Installation
Manufacturers' Field Services
Independent Testing

1.03 STARTUP, TESTING, AND COMMISSIONING
Spare Parts
Consumables
Checkout and Starting Systems
Starting, Adjusting, and Balancing
Startup and Commissioning/Performance Testing
Demonstration and Training

1.02 OVERALL EXECUTION REQUIREMENTS

A. Coordination

1. Conduct preconstruction and pre-installation meetings before commencing certain Work that requires coordination or has special requirements or approvals.

2. Comply with the required Work sequence and coordination as may be specified in Summary of Work and reflect in the Project scheduling.

3. Coordinate Work such that Work is completed with minimum disruption to residents and businesses.

4. Coordinate space requirements and installation of Work. Utilize spaces efficiently to maximize accessibility for other installations, maintenance, and repairs.

5. Coordinate Work of the various Specifications with interdependent responsibilities for installing, connecting to, and placing in service, operating equipment.

6. Coordinate related Work at the Site in accordance with Article 7 of the Standard General and Supplementary Conditions, if any.

7. Coordinate completion and cleanup of Work of separate sections in preparation for Substantial Completion and for portions of Work designated for Owner's partial occupancy.

8. After Owner occupancy of premises, coordinate access to Site for correction of defective Work and/or incomplete Work to minimize disruption of Owner's activities.

☐ See the **Specific Project Requirements and Procedures** for additional requirements.

B. Existing Conditions

1. Paragraph 4.01 of the Standard General and Supplementary Conditions, if any, covers Availability of Lands.

☒ No information is identified or available for the Project.

☐ Information identified is included as an attachment to the **Specific Project Requirements and Procedures.**

2. Paragraph 4.02 of the Standard General and Supplementary Conditions, if any, covers Subsurface and Physical Conditions.

   ☒ No information is identified or available for the Project.

   ☐ Information identified is included as an attachment to the **Specific Project Requirements and Procedures.**

3. Pursuant to Paragraph 4.04 of the Standard General and Supplementary Conditions, if any, existence and location of Underground Facilities and other utilities and construction indicated as existing are not guaranteed. Before beginning Work investigate and verify the existence and location of Underground Facilities and other utilities and construction.

   ☒ Conduct test pits and other utility research and properly restore utilities interfered with or damaged during construction at no cost to the Owner.

   ☐ Engage a professional subsurface utility locator to verify the existence and location of underground utilities prior to starting Work

   ☒ See the **Specific Project Requirements and Procedures** for additional requirements.

4. Paragraph 4.05 of the Standard General and Supplementary Conditions, if any, covers Reference Points.

   ☐ No information is identified or available for the Project.

   ☒ Information is included in the **Specific Project Requirements and Procedures**.

5. Paragraph 4.06 of the Standard General and Supplementary Conditions, if any, covers Hazardous Environmental Conditions at Site.

   ☒ No information is identified or available for the Project.

   ☐ Information identified is included as an attachment to the **Specific Project Requirements and Procedures.**

   ☐ Other information is included as an attachment to the **Specific Project Requirements and Procedures**.

C. Field Engineering

☒ Delete - not required for the Project.

☐ Provide for the Project as follows.

1. Prior to initiating construction, engage an independent professional land surveyor registered in the state where the Project is located to provide surveys and permanent reference points for all bounds and property markers along the line of the Work that may be disturbed during construction. Submit copies of all ties to the bounds and property markers to the Engineer prior to excavation at the Site(s).

2. Maintain surveyor's log of control and other survey work. Keep log available for reference.

3. Verify layout information shown on the Drawings in relation to existing benchmarks before lay out of the Work. Locate and protect existing benchmarks and control points. Preserve permanent reference points during construction.

4. Promptly report lost or destroyed reference points, benchmarks, or control points. Promptly report requirements relocate reference and control points due to changes in grades. Promptly replace lost or destroyed bounds or markers and control points based on the original survey control points utilizing the services of a professional land surveyor registered in the state where the Project is located. The cost of replacing markers disturbed by the Contractor's operations shall be at the Contractor's expense.

☐ See the **Specific Project Requirements and Procedures** for additional requirements.

D. Record Documents

1. Provide Record Documents in accordance with Paragraph 6.12 of the Standard General and Supplementary Conditions, if any, and in accordance with the **Payment and Administrative Procedures**.

2. Store Record Documents separate from documents used for construction. Record information concurrent with construction progress.

3. Legibly mark each item to record description of actual equipment and material installed and actual construction on approved submittals, including the following.

   a. Manufacturer's name and equipment and material model and number

   b. Material and equipment substitutions or alternates utilized

   c. Approved changes

   d. Measured depths of foundations

   e. Measured horizontal and vertical locations of Underground Facilities and appurtenances, referenced to permanent surface improvements

   f. Measured locations of internal utilities and appurtenances concealed in construction, referenced to visible and accessible features of the Work

   g. Field changes of dimension and detail

   h. Details not on original Contract Documents or Shop Drawings

E. Cutting and Patching

1. Employ skilled and experienced personnel to perform cutting and patching.

2. Submit written request in advance of cutting or alteration which affects:

   a. structural integrity of any element of Project;

   b. integrity of weather exposed or moisture resistant elements;

   c. efficiency, maintenance, or safety element;

   d. safety, traffic, or hazard barriers;

   e. visual qualities of sight exposed elements; and

   f. work of Owner or separate contractor.

3. Execute cutting, fitting, and patching including excavation and fill to complete Work and to:

   a. fit materials together, to integrate with other work;

   b. uncover Work to install ill-timed Work;

   c. remove and replace defective or non-conforming Work;

d. remove Samples of installed Work for testing when requested; and

e. provide openings in element of Work for penetration of mechanical and electrical work.

4. Execute Work by methods to avoid damage to other work and which will provide appropriate surfaces to receive patching and finishing.

5. Provide adequate temporary support for Work to be cut.

6. Restore Work with new materials in accordance with requirements of Contract Documents. Use materials identical with original materials where recognized that satisfactory results can be produced.

7. Provide protection from elements for areas which may be exposed by uncovering work.

8. Refinish surfaces to match adjacent finishes. For continuous surfaces, refinish to nearest intersection or natural break. For an assembly, refinish entire unit. Restore exposed finishes of patched areas; and, where necessary extend finish restoration onto retained adjoining Work in a manner, which will eliminate evidence of patching.

9. Identify any Hazardous Waste, Hazardous Environmental Condition, or hazardous substance exposed during the Work to Owner for decision or remedy in accordance with Paragraph 4.06 of the Standard General and Supplementary Conditions, if any.

10. Cut work by methods least likely to damage Work to be retained and work adjoining. Cut Work with sawing and grinding tools, not with hammering, chopping, or burning tools. Cut masonry and concrete materials with masonry saw or core drill. Do not use pneumatic tools without prior approval. Core drill openings through concrete Work. Adhere to mandatory cutback requirements when saw cutting concrete and roadway openings.

11. Do not cut and patch structural Work in a manner resulting in reduction of load-carrying capacity or load/ deflection ratio.

12. Fit Work tight to pipes, sleeves, ducts, conduit, and other penetrations through surfaces. Maintain supports to ensure structural integrity of the Work. Provide devices and methods to protect other portions of Project from damage and seal voids. For interior work at penetrations of fire rated walls, partitions, ceiling, or floor construction, completely seal voids with fire resistant material, to full thickness of the penetrated element.

13. Do not cut and patch operational or safety-related components that reduce capacities to perform in manner intended. Do not cut and patch Work that reduces visual qualities. Remove and replace unsatisfactory cutting patching as directed by Engineer or Owner.

F. Electrolytic Corrosion Prevention

1. Prevent galvanic action, bimetallic corrosion, anodic or cathodic action, and electrolysis at all electrical grounds and for all galvanic scale (electromotive series or table of oxidation potentials). Do not allow contact of dissimilar metals further apart than 0.35 on the galvanic scale (electromotive series or table of oxidation potentials). The electrode potential of common metals is listed below.

	Electrode Potential Volts (Relative to Hydrogen)
Magnesium	+2.37
Aluminum	+1.70
Zinc+	+0.76
Chromium	+0.56
Iron and Steel	+0.44
Cadmium	+0.40
Nickel	+0.25
Tin	+0.14
Lead	+0.13
Copper	-0.34

2. Unless otherwise indicated, provide dielectric insulators between ferrous and nonferrous pipe and equipment.

G. Quality Assurance and Control of Installation

1. Monitor quality control of Subcontractors, Suppliers, manufacturers, material, equipment, services, Site conditions, and workmanship, to produce Work of specified quality. Conduct field quality control and testing specified.

2. Comply fully with manufacturers' installation instructions, including each step in sequence. If manufacturers' instructions conflict with Contract Documents, request clarification from Engineer before proceeding.

3. Comply with specified standards as a minimum quality for the Work except when more stringent tolerances, codes, or specified requirements indicate higher standards or more precise workmanship.

4. Perform Work using persons qualified to produce workmanship of specified quality.

5. Install field Samples and mockups at the Site as required in Specifications for review. Acceptable Samples and mockups represent a quality level for the Work. Where field Sample or mockup is specified to be removed, clear area after field Sample or mockup has been accepted by Engineer or after Work is complete when mockup is to serve as a control reference.

6. Protect adjacent construction in accordance with Paragraph 6.11 of the Standard General and Supplementary Conditions, if any.

H. Manufacturers' Field Services

1. If required in the Specifications, arrange and pay for material or equipment Suppliers or manufacturers to provide qualified staff personnel (field representative) to perform the following services and services specified. Submit reports of activities, actions taken and test results to Engineer within 10 days of completion.

   a. Observe Site conditions, conditions of surfaces and installation, quality of workmanship.

   b. Report observations and Site decisions or instructions given to applicators or installers that are supplemental or contrary to manufacturers' written instructions.

   c. Assist with field assembly as required.

   d. Furnish, setup, and operate required test equipment and facilities.

   e. Perform and record results of manufacturer recommended inspections and tests, and tests specified for material and equipment.

   f. Be responsible for protection of material and equipment and safety of all personnel during testing.

   g. Perform any other services normally provided by field representative's company.

   h. Instruct operating personnel in proper use of material and equipment.

   i. Instruct and supervise field repairs before acceptance by Owner.

I. Independent Testing

1. Employ and pay for specified services of an independent firm in accordance with Paragraph 13.03 of the Standard General and Supplementary Conditions to perform inspection and testing as may be specified except where responsibility for a specific inspection or test is expressly allocated to Owner in the Specifications or by Laws and Regulations.

2. Reports will be submitted by the independent firm to Owner, in duplicate indicating observations and results of tests and indicating compliance or noncompliance with Contract Documents.

3. Inspection, testing, and source quality control may occur on or off the Project Site.

4. Cooperate with independent firm. Furnish samples of materials, design mix, equipment, tools, storage and assistance as requested.

5. Notify Owner and independent firm 24 hours before expected time for operations requiring services.

6. Make arrangements with independent firm and pay for additional Samples and tests required for Contractor's use.

7. Retesting required because of nonconformance to specified requirements will be performed by the same independent firm if instructed by Owner. Payment for retesting will be charged to Contractor by deducting inspection or testing charges from the Contract Price.

8. Testing or inspecting does not relieve Contractor from performing Work in accordance with requirements of the Contract Documents.

1.03 STARTUP, TESTING, AND COMMISSIONING

A. Spare Parts

1. Provide spare parts required for construction, startup, testing and commissioning of the Work prior to achievement of Substantial Completion, including spare parts for flushing and consumable supplies such as bolts, nuts, gaskets, filters, insulating tape, etc., normally consumed in the startup, commissioning and testing.

2. If spare parts are purchased by Owner, Contractor shall have the right to use the spare parts purchased by Owner provided that such spare parts are replaced prior to Substantial Completion at Contractor's expense. Replacement spare parts, replaced by Contractor, shall be new, unused and identical as the original spare part used.

B. Consumables

1. Provide initial fills of consumables including equipment lubricants, resins, chemicals, desiccants, and fuels. Provide subsequent fills if required during Warranty Period if acts or omissions of Contractor cause such consumables to require replacement.

2. Coordinate with Owner for consumables required.

C. Checkout and Starting Systems

1. Coordinate schedule for startup and operation of various equipment and systems with Owner.

2. Notify Owner 7 days before startup of each major piece of equipment or system, including a staffing request for Owner's operations and maintenance personnel required to adequately and safely support each specific start-up and operation activity.

3. Verify that each system or piece of equipment item has been assembled, constructed, or completed in accordance with the Contract and capable of functioning as intended.

4. Verify that each piece of equipment or system has been checked for proper lubrication, drive rotation, magnetic center alignment, belt tension, control sequence, or other conditions which may cause damage.

5. Verify that each piece of equipment or system has successfully completed construction testing and cold commissioning, including hydrostatic testing, loop checks, relay checks, calibration, and continuity checks and that all tests, meter readings, and specified electrical characteristics agree with those required by the equipment or system manufacturer.

6. Verify wiring and support components for equipment are complete and tested.

7. Execute start up under supervision of responsible manufacturers' representative or Contractor's personnel in accordance with manufacturers' instructions utilizing Owner's qualified operations and maintenance staff trained by Contractor.

8. When specified in individual Specification Sections, require manufacturer to provide field representative to be present at Site to inspect, check and approve equipment or system installation before start up, and to supervise placing equipment or system in operation.

D. Adjusting and Balancing

1. Supply necessary equipment, material, construction power, and consumables (except for those provided by Owner) needed to startup and fully test the Work and replenish the same until Substantial Completion is achieved. Contractor may utilize Owner's operating spare parts, such use requiring timely replacement at Contractor's expense.

2. Coordinate as required for conduct of independent testing.

3. Perform specified and required adjusting and balancing concurrently to the maximum extent possible on individual equipment and systems and prior to startup and commissioning/performance testing.

E. Startup and Commissioning/Performance Testing

1. Conduct startup and commissioning/performance tests to demonstrate the Work meets the requirements of the Contract Documents, satisfies the Owner's requirements, and is in accordance with Paragraph 14.04. of the Standard General and Supplementary Conditions, if any. Conduct testing in accordance with

☒ individual Specification sections.

☐ the separate Startup, Commissioning, and Testing section.

☐ the **Specific Project Requirements and Procedures.**

2. Prepare and submit a written startup and commissioning/performance testing procedures no later than 60 days prior to start of testing for review and final test procedures no later than 30 days prior to start of testing. Submit a staffing request for Owner's operations and maintenance personnel.

3. Calibrate test equipment and instrumentation on Site or provide acceptable certificate of calibration conducted within 30 days of testing.

4. Complete functional testing prior to initiating the startup and commissioning/performance testing as specified.

5. Complete specified startup and commissioning/performance tests prior to Substantial Completion. Owner and Engineer will witness Performance Testing. Notify Owner and Engineer in writing at least 7 days prior to starting any startup and commissioning/performance testing. Coordinate for witnessing of tests by required regulatory representatives.

6. Submit written test reports.

F. Demonstration and Training

1. Provide formal demonstration and training of Owner's personnel as specified in

☒ individual Specification sections.

☐ the separate Demonstration and Training section.

☐ the **Specific Project Requirements and Procedures.**

END OF SECTION

SECTION 03 01 05

CONCRETE REPAIR

PART 1 – GENERAL

1.01 SUMMARY

A. Section Includes

1. Repair new concrete when permitted by the Engineer and fill form tie holes, both as per Section 03 35 00, in accordance with this Section and applicable reference standards listed in Article 1.03.

B. Related Requirements

1. 03 35 00 Concrete Placing, Curing and Finishing

1.02 PRICE AND PAYMENT PROCEDURES

A. Measurement and payment requirements: per Division 01 General Requirements.

1.03 REFERENCES

A. AMERICAN ASSOCIATION OF STATE HIGHWAY AND TRANSPORTATION OFFICIALS (AASHTO)

1. AASHTO T 277 - Standard Method of Test for Electrical Indication of Concrete's Ability to Resist Chloride Ion Penetration

B. ASTM INTERNATIONAL (ASTM)

1. ASTM C109/C109M - Standard Test Method for Compressive Strength of Hydraulic Cement Mortars (Using 2-in. or (50-mm) Cube Specimens)

2. ASTM C1202 - Standard Test Method for Electrical Indication of Concrete's Ability to Resist Chloride Ion Penetration

3. ASTM C78/C78M - Standard Test Method for Flexural Strength of Concrete (Using Simple Beam with Third-Point Loading)

4. ASTM C496/C496M - Standard Test Method for Splitting Tensile Strength of Cylindrical Concrete Specimens

5. ASTM C882/C882M - Bond Strength of Epoxy-Resin Systems Used with Concrete by Slant Shear

6. ASTM C884/C884M - Thermal Compatibility between Concrete and Epoxy-Resin Overlay

7. ASTM G109 - Determining the Effects of Chemical Admixtures on the Corrosion of Embedded Steel Reinforcement in Concrete Exposed to Chloride Environments

1.04 ADMINISTRATIVE REQUIREMENTS

A. Coordination, Sequencing, and Scheduling: per Division 01 General Requirements.

1.05 SUBMITTALS

A. Submit in accordance with Division 01 General Requirements.

B. Product Data and Instructions

1. Trowel-grade polymer modified portland cement repair mortar

2. Non-sag polymer modified portland cement repair mortar

C. Notarized certificate stating that repair material meets the specified requirements and the manufacturer's current printed product literature.

D. Closeout and Maintenance Material Submittals: per Division 01 General Requirements.

1.06 QUALITY ASSURANCE

A. Provide in accordance with Division 01 General Requirements.

1.07 DELIVERY, STORAGE, AND HANDLING

A. Provide in accordance with Division 01 General Requirements.

1. Deliver products in original, unopened containers with the manufacturer's name, labels, product identification, and batch numbers.

2. Store in accordance with manufacturer recommendations.

1.08 SITE CONDITIONS

A. Existing Conditions: per Division 01 General Requirements.

1. Take precautions to avoid damage to surface due to mixing and handling of the specified repair material near the area of Work.

PART 2 – PRODUCTS

2.01 MORTAR

A. Performance/Design Criteria

1. Mixed Properties

a. Application time: approximately 15 minutes.

b. Finishing time: 20-60 minutes.

c. Color: concrete gray.

2. Cured Properties

a. Compressive strength (ASTM C109/C109M)

1) 1 day: 3,000 psi minimum.

2) 28 day: 7,000 psi minimum.

b. Splitting Tensile Strength (ASTM C496/C496M)

1) 28 day: 750 psi minimum.

c. Flexural Strength (Modulus of Rupture, ASTM C78/C78M)

1) 28 day: 2,000 psi minimum.

d. Bond Strength (ASTM C882/C882M, modified)

1) 28 day: 2,200 psi minimum.

e. Thermal Compatibility (ASTM C884/C884M, modified)

1) Passes test.

f. Permeability (ASTM C1202, AASHTO T 277)

1) 28 day: approximately 500 coulombs.

g. Cracked Beam Corrosion Tests (ASTM G 109, modified)

1) Reduced corrosion rates: 63 percent versus control specimens.

B. Acceptable Level of Quality: equivalent to products manufactured by Sika Corporation meeting the specified performance requirements.

1. Trowel grade mortar: SikaTop 122 Plus

2. Non-sag mortar: SikaTop 123 Plus

3. Steel reinforcement primer: Sika Armatec 110 EpoCem

C. Source Quality Control

1. Provide in accordance with Division 01 General Requirements.

PART 3 – EXECUTION

3.01 GENERAL

A. Do not apply material in inclement weather or if inclement weather is imminent.

B. Condition product as recommended by the manufacturer.

3.02 SURFACE PREPARATION

A. Mechanically prepare areas to be repaired so they are clean, sound and free of contaminants. Remove loose concrete by mechanical means. Remove dirt, oil, grease and bond-inhibiting materials from the surface.

B. Except where tie holes are filled, saw cut perimeter 1/8 inch minimum when a neat mortar is to be applied, and 1 inch minimum when an extended mortar is to be applied.

C. Prepare concrete substrate to obtain a minimum surface profile of 1/16 inch in depth with a new aggregate fractured surface using steel shotblasting, abrasive (sand) blasting, or waterjetting (hydrodemolition). Do not use of scabblers, bush hammers, or pneumatic hammers. Provide that the area to be repaired is not less than 1/8 inch in depth.

D. Prepare substrate to saturated surface dry condition with no standing water.

3.03 MIXING AND APPLICATION

A. The following describes the specific procedures applicable for the Sika products specified in Part 2. Mix and apply in strict accordance with and adhere to limitations and cautions of manufacturer's instructions.

1. Horizontal surfaces: SikaTop 122 Plus (trowel-grade) or equal.

2. Vertical and overhead surfaces: SikaTop 123 Plus (non-sag) or equal.

B. Trowel-Grade Polymer Mortar

1. Pour entire Component "A" into mixing container. Add entire Component "B" while mixing. For extended mix, introduce 3/8 inch coarse aggregate at desired quantity. Mix to uniform consistency, maximum 3 minutes.

    a. Addition rate not to exceed 42 pounds per bag.

    b. Aggregate: non-reactive, clean, well-graded, saturated surface dry, with low absorption/high density.

2. Scrub mortar into substrate, filling pores and voids. Force material against edge of repair, working toward center. After filling repair, consolidate, then screed. Allow mortar or concrete to set to desired stiffness and finish with wood or sponge float for a smooth surface.

    a. Minimum application thickness: 1/8 inch for a neat mortar; 1 inch if extended.

    b. Maximum application thickness in a single lift: 1 inch for a neat mortar; 3 inches if extended.

    c. Where multiple lifts are required, score top surface of the preceding lift to produce a roughened surface. Allow preceding lift to reach final set prior to applying the next lift.

C. Non-Sag Polymer Mortar

1. Pour entire Component "A" into mixing container. Add entire Component "B" while mixing. Mix maximum 3 minutes to uniform consistency.

2. Scrub mortar into substrate, filling pores and voids. Force material against edge of repair, working toward center. After filling repair, consolidate, then screed. Allow mortar or concrete to set to desired stiffness and finish with wood or sponge float for a smooth surface.

    a. Minimum application thickness: 1/8 inch.

    b. Maximum application thickness in a single lift: 1-1/2 inches.

    c. Where multiple lifts are required, score top surface of the preceding lift to produce a roughened surface. Allow preceding lift 30 minutes minimum to reach final set prior to applying the next lift.

D. Curing

1. Moist cure with wet burlap and polyethylene using a fine mist of water or water based compatible curing compound. Do not use curing compounds for curing between successive lifts. Do not use solvent-based curing compounds. Commence moist curing immediately after finishing. Protect newly applied material from direct sunlight, wind, rain and frost.

3.04 FIELD QUALITY CONTROL

A. Provide in accordance with Division 01 General Requirements.

3.05 CLEANING

A. Leave finished Work and Work area in a neat, clean condition without evidence of spillovers on adjacent areas.

END OF SECTION

SECTION 03 11 00

CONCRETE FORMING

PART 1 – GENERAL

1.01 SUMMARY

A. Section Includes

1. Provide all materials, tools, equipment and labor required for the design, preparation and cleaning, construction, and removal of all concrete formwork, and the installation of all concrete embedment's furnished under other sections, necessary for the proper completion of the Work in accordance with this Section and applicable reference standards listed in Article 1.03.

1.02 PRICE AND PAYMENT PROCEDURES

A. Measurement and payment requirements: per Division 01 General Requirements.

1.03 REFERENCES

A. Reference Standards

1. ACI 117 (2010) – Specifications for Tolerances for Concrete Construction and Materials and Commentary

2. ACI 301 (2010) – Specifications for Structural Concrete

3. U.S. Army Corps of Engineers – COE CRD-C 572 – Corps of Engineers Specifications for Polyvinylchloride Waterstops

1.04 ADMINISTRATIVE REQUIREMENTS

A. Coordination, Sequencing, and Scheduling: per Division 01 General Requirements.

1.05 SUBMITTALS

A. Submit in accordance with Division 01 General Requirements.

B. Product Data and Manufacturer's Instructions

1. Form Ties

2. Form Release Agent

3. Waterstops, including details at all corners and intersections

C. Closeout and Maintenance Material Submittals: per Division 01 General Requirements.

1.06 QUALITY ASSURANCE

A. Provide in accordance with Division 01 General Requirements.

B. Design, erect, shore, brace and maintain formwork in accordance with ACI 301 to support all loads, including construction loads, until concrete structures can support such loads.

1.07 DELIVERY, STORAGE, AND HANDLING

A. Provide in accordance with Division 01 General Requirements.

B. Deliver, store and install all materials so as not to degrade quality, serviceability and appearance.

PART 2 – PRODUCTS

2.01 MATERIALS

A. General

1. Formwork shall conform dimensionally to the concrete Work as shown on the Drawings. To minimize the number of panel joints, formwork panels shall be of the largest practicable sizes. Formwork shall be sufficiently tight to prevent leakage.

2. Undamaged smooth form facing materials such as plywood, hardboard, metal and plastic, that will produce a smooth form finish, shall be used. Formwork shall not result in fins or offsets exceeding 1/8-inch. If used, aluminum forms with unoxidized surfaces shall be pretreated with a paste made of calcium hydroxide and water followed by water rinsing, repeated until hydrogen bubbles do not form.

B. Form Release Agent: Form release agent shall be non-grain-raising, non-staining, and shall not leave a residue on the concrete nor adversely affect bonding of materials to be applied thereto.

C. Form Ties:

1. Form ties shall be adjustable length, sized to withstand construction loads, and upon removal shall prevent concrete spalling.

2. The portion of the tie remaining embedded in the concrete upon removal shall be at least 1 1/2-inches from both concrete faces. The form tie

assembly shall be provided with cone-shaped depressions at the concrete surfaces of at least 1-inch diameter and 1 1/2-inches deep.

3. Ties shall contain a neoprene waterstop. Tie systems that include plug style waterstops inserted into tie holes after removal of forms are not permitted.

D. PVC Waterstops: PVC waterstops shall meet COE CRD-C 572 except: the tensile strength shall exceed 2,000 psi; the minimum ultimate elongation shall be 300 percent; and they shall be manufactured from virgin polyvinylchloride with no scrap, reclaimed material, or pigment contained therein.

1. Waterstops for construction joints shall be 6-inch wide, ribbed and flat: Greenstreak 679, Vinylex R6-38, Wirestop FR-6380, or approved equal.

2. Corners and intersections shall be factory formed and tested.

3. A system of hog rings or grommets spaces 12-inches apart along both edges of waterstops shall be provided for proper positioning and securing of waterstop to adjacent reinforcement by wiring.

PART 3 – EXECUTION

3.01 CONSTRUCTION

A. Tolerances: Tolerances shall be in accordance with ACI 117.

B. Form Alignment: At locations where continuous surfaces are formed in successive units, forms shall be tightly fitted over the hardened concrete surface to obtain accurate surface alignment and to prevent leakage of mortar and the formation of fins, ridges, and other defects.

C. Chamfered Edges:

1. All exposed concrete corners shall be formed with beveled strips to provide 3/4-inch chamfers unless otherwise shown, specified, or directed by the Engineer.

2. Chamfering by grinding is prohibited.

D. Openings:

1. Form openings in concrete where required for other Work. Upon failing to form such openings, provide them in a manner approved by the Engineer at no additional cost to the Owner.

E. Cleanouts and Access Panels:

1. Temporary openings shall be provided to facilitate cleaning and inspection prior to concrete placement, including at the bottom of wall forms. Cleanout openings

are not permitted in exposed concrete (concrete exposed to view upon completion of the Work, whether or not it is painted) without the approval of the Engineer.

2. All refuse, sawdust, shavings, etc. shall be removed, and the forms broom-cleaned before concrete placement.

F. Form Release Agent:

1. Forms shall be coated with the approved form release agent before placement of reinforcement. Do not apply form release agent at locations of monolithic construction joints, which are construction joints with all reinforcement continuous through the joint. Excess agent applied to the forms, and any and all on the reinforcement and other surfaces requiring a concrete bond, shall be removed.

2. Forms for unexposed surfaces may be thoroughly wetted in lieu of the approved form release agent immediately before concrete is placed, however form release agent shall be used in freezing weather.

G. PVC Waterstops:

1. Random samples of delivered waterstops may be tested for conformance by a testing laboratory selected and paid for by the Owner. Nonconformance will be cause for rejection.

2. Waterstops shall be stored under tarpaulins, protected from sunlight, precipitation, soiling, etc.

3. Center waterstop in joint and secure in correct position with hog rings or grommets spaced 12-inches apart along both edges of the waterstop and wired to adjacent reinforcement prior to concrete placement.

4. Waterstops shall be continuous throughout.

5. Only straight butt splices shall be made in the field. All field splices shall be heat fused welded using a Teflon coated thermostatically controlled waterstop splicing iron at 380 ^{o}F, and following manufacturer's recommendations. Unacceptable field splices include, but are not limited to, the following:

   a. Tensile strength less than 80% of parent section.

   b. Misalignment of ribs more than 1/16-inch, or that reduces cross section by more than 15%.

   c. Visible porosity, bubbles, or inadequate bonding. If while prodding the joint with a penknife, the knife breaks through the outer portion of the weld into a bubble.

   d. Visible signs of splice separation when cooled splice is bent by hand at a sharp angle, including bond failure greater than 1/16-inch depth.

e. Combined misalignment and bond failure with net cross sectional reduction of more than 15%.

f. Charred or burnt material.

g. Edge welded tee intersections.

3.02 INSTALLATION OF EMBEDDED ITEMS

A. General:

1. Coordinate the setting of anchor bolts, inserts, wall pipe, sleeves, and other embedded items. Before placing concrete ensure that all items are accurately located and firmly secured against displacement.

2. All items shall be thoroughly cleaned and free of loose rust, mill scale, dirt, grease, etc.

B. Electrical Conduit: Electrical conduit may be embedded in concrete provided the following conditions are met. Conduit runs that cannot satisfy these conditions shall be run exposed.

1. Outside diameter of conduit shall not exceed 1/3 of concrete thickness.

2. Conduit shall not be placed closer than three diameters on center.

3. Conduit shall not significantly impair the strength of the construction.

4. Conduit shall not be embedded in structural concrete slabs less than 4-inches thick.

5. Only two conduits may cross at any point. The sum of the outside diameter of the crossing conduits shall not exceed 1/3 of the concrete thickness.

6. A 1 1/2-inch minimum concrete cover shall be provided for conduits in structural slabs.

7. Conduit shall not be located between bottom of reinforcement and bottom of slab.

8. Aluminum conduit shall not be embedded in concrete.

9. Conduit shall be installed such that cutting, bending, and/or displacement of reinforcement from its proper location is not necessary.

3.03 REMOVAL

A. Form Removal:

1. Forms shall be removed while ensuring the complete safety of the structure.

2. Newly unsupported portions of the structure shall not be subjected to heavy construction or material loading.

3. The Contractor shall be Responsible for the proper removal of forms and bracing.

4. Spalling of concrete surfaces shall be prevented.

5. When forms are removed before the specified curing period (as specified in SECTION 03 35 00 CONCRETE PLACING, CURING, AND FINISHING) is complete, measures shall be taken to continue curing and providing thermal protection for the concrete.

6. Forms may be removed when the cumulative time during which the temperature of the air surrounding the concrete is above 50 °F is 24 hours for walls and similar parts of the Work not supporting the weight of the concrete, and four (4) days for beam soffits.

B. Tie Holes: Filling of form tie holes and concrete finishing are specified in SECTION 03 35 00, CONCRETE PLACING, CURING, AND FINISHING.

C. Cleaning and Repair of Forms: Parts of forms reserved for reuse shall be inspected, cleaned and repaired. Any and all parts dented, deformed or otherwise rendered unfit for reuse shall be discarded.

END OF SECTION

SECTION 03 20 00

CONCRETE REINFORCEMENT

PART 1 – GENERAL

1.01 SUMMARY

A. Section Includes

1. Provide all materials, tools, equipment, and labor necessary for the fabrication and installation of all reinforcement as shown on the Contract Drawings, as specified herein, and as necessary for the proper completion of the Work in accordance with this Section and applicable reference standards listed in Article 1.03.

1.02 PRICE AND PAYMENT PROCEDURES

A. Measurement and payment requirements: per Division 01 General Requirements.

1.03 REFERENCES

A. Reference Standards

1. American Concrete Institute (ACI)

   a. ACI 117 – Specifications for Tolerances for Concrete Construction and Materials and Commentary

   b. ACI SP-66 – ACI Detailing Manual

2. ASTM International (ASTM)

   a. ASTM A615 – Standard Specification for Deformed and Plain Carbon-Steel Bars for Concrete Reinforcement

   b. ASTM 1064/1064M – Standard Specification for Carbon-Steel Wire and Welded Wire Reinforcement, Plain and Deformed, for Concrete

3. American Welding Society (AWS)

   a. AWS D1.4/D1.4M– Structural Welding Code – Reinforcing Steel

4. Concrete Reinforcing Steel Institute (CRSI)

   a. CRSI 10MSP – Manual of Standard Practice

1.04 ADMINISTRATIVE REQUIREMENTS

A. Coordination, Sequencing, and Scheduling: per Division 01 General Requirements.

1.05 SUBMITTALS

A. Submit in accordance with Division 01 General Requirements.

B. Product Data

1. Certified Mill Reports

C. Shop Drawings

1. Reinforcement Drawings - comply with ACI SP-66, and include the following information:

a. Sizes, dimensions, and locations for reinforcement and supports

b. Bending diagrams and schedules

c. Splices

d. Cover and clearances

e. Class designation and details of bar supports

f. Pertinent reinforced concrete details with dimensions and elevations

g. Items furnished by other trades and/or under other sections of the specification that are to be cast in concrete where interference with reinforcing may occur

h. Reinforcement of walls shall be shown on wall elevations with required sections, reinforcement of beams on beam elevations with required sections, and reinforcement of slabs on plan views with required sections. Provide plan details where walls intersect.

D. Closeout and Maintenance Material Submittals: per Division 01 General Requirements.

1.06 QUALITY ASSURANCE

A. Provide in accordance with Division 01 General Requirements.

1.07 DELIVERY, STORAGE, AND HANDLING

A. Provide in accordance with Division 01 General Requirements.

B. Deliver reinforcement in bundles with tags indicating size, length, and identification mark.

C. Store materials off the ground to prevent soiling and to facilitate subsequent inspection and handling.

1.08 SITE CONDITIONS

A. Existing Conditions: per Division 01 General Requirements.

PART 2 – PRODUCTS

2.01 STEEL REINFORCEMENT

A. General: "Steel reinforcement" shall include all bars, anchorages, stirrups, dowels, ties, tie-wire, chairs and other steel supports, and spacers as noted on the Contract Drawings, specified herein, and as required for the proper completion of the Work.

B. Materials

1. Reinforcement bars shall be formed from new billet steel conforming to ASTM A 615/A 615M, Grade 60 except as otherwise specified.

C. Tie wire shall conform to FS QQ-W-461 annealed black, 16-gauge minimum.

D. Bar Supports

1. Chairs, bolsters, spacers and other supports to properly position reinforcement shall conform to the "Bar Support" recommendations of CRSI 10MSP, and shall be of adequate strength and design to prevent displacement of reinforcement and discoloration of concrete.

2. Supports shall be Class 3, except where concrete surfaces are exposed to view, weather and/or moisture where they shall be Class 1 - Plastic Protected.

3. Supports for bottom reinforcement of slabs-on-soil shall be chairs with integral plates, or precast concrete blocks not less than 4-inches square with a compressive strength equal to that of the surrounding concrete. Precast blocks may only be used to support reinforcement not more than 3-inches from the bottom of the slab.

E. Fabrication:

1. Fabricate reinforcement in accordance with ACI 117. Steel reinforcement shall be fabricated to the sizes, shapes and dimensions shown on the Contract Drawings, details and schedules. All bending shall be in accordance with CRSI 10MSP. All steel shall be bent cold and shall not be bent or straightened in a manner that will injure the metal. Bars with kinks or bends not so detailed shall not be used.

2. Bends for stirrups and ties shall be made around a pin having a diameter not less than four times the diameter of the bar. Bends for other bars shall be made around a pin having a diameter not less than six times the

diameter of the bar, except that for bars larger than 1-inch the pin shall be not less than eight times the diameter of the bar.

F. Dowel Bar Splicers/Dowel Inserts:

1. Dowel bar splicers shall be a two-component threaded rebar splice system. The internally threaded component shall be forged from Grade 60 deformed rebar material free of external machining and/or welding. It shall contain an integral flange with nailing holes and be threaded with UNC or UN threads to a depth equal to the nominal diameter of the threads plus 1/4 inch. The externally threaded splice component shall be fabricated from Grade 60 deformed rebar material and supplied with rolled threads corresponding with the internally threaded component. The root diameter of the threads shall provide a minimum cross sectional area equal to the cross sectional area of the nominal bar size. Manufacturer testing shall indicate ultimate tension failure occurring in the nominal bar diameter, not at the mechanical splice.

PART 3 – EXECUTION

3.01 INSTALLATIONS

A. Tolerances shall conform to ACI 117.

B. Placement

1. Reinforcement shall be accurately positioned both horizontally and vertically, and shall be properly secured and sufficiently rigid to prevent displacement during concrete placement.

2. Reinforcement shall be securely tied at intersections with tie wire or clips in a manner that will keep all metal away from exposed concrete surfaces.

C. Splices

1. Reinforcement splices shall be as shown on the Contract Drawings. Where not shown, splices shall be located away from areas of maximum stress, and shall be approved by the Engineer.

2. Only when permitted by written approval of the Engineer, welding shall be in accordance with AWS D1.4/D1.4M.

D. All reinforcement within an area of a continuous concrete placement shall be installed, supported, and secured before beginning the concrete placement.

E. Reinforcement Adjustment

1. Adjust to within allowable tolerances to avoid interference with other reinforcement, conduits, and/or embedded items.

2. Reinforcement shall not be moved beyond allowable tolerances without the Engineer's approval.

3. Reinforcement shall not be heated, bent or cut without approval Engineer's approval.

F. Cleaning: All reinforcement shall be entirely free from flaking rust, loose mill scale, grease, dirt, etc. that might reduce its bond with the concrete.

G. Relation of Bars to Concrete Surfaces: Concrete cover for reinforcement shall conform to the dimensions shown on the Drawings.

H. Observation of Reinforcement: Notify the Engineer at least 24 hours before placing concrete. All reinforcement within the area of one day's concrete placement shall be tied in place, and observed by the Engineer, prior to commencing concrete placement.

END OF SECTION

This page intentionally left blank

SECTION 03 30 00

CAST-IN-PLACE CONCRETE

PART 1 – GENERAL

1.01 SUMMARY

A. Provide cast-in-place concrete in accordance with this Section and applicable reference standards listed in Article 1.03.

B. ACI 301 is hereby made a part of this specification, except as otherwise modified by the Contract Documents.

C. Related Requirements

1. Section 03 35 00 - Concrete Placing, Curing and Finishing

1.02 PRICE AND PAYMENT PROCEDURES

A. Measurement and payment requirements: per Division 01 General Requirements.

1.03 REFERENCES

A. Reference Standards

1. American Concrete Institute International (ACI)

a. ACI 117 Specifications for Tolerances for Concrete Construction and Materials and Commentary

b. ACI 301 Specifications for Structural Concrete

B. ASTM International (ASTM)

a. ASTM C31/C31M Standard Practice for Making and Curing Concrete Test Specimens in the Field

b. ASTM C33/C33M Standard Specification for Concrete Aggregates

c. ASTM C40 Standard Test Method for Organic Impurities in Fine Aggregates for Concrete

d. ASTM C88 Standard Test Method for Soundness of Aggregates by Use of Sodium Sulfate or Magnesium Sulfate

e. ASTM C94/C94M Standard Specification for Ready-Mixed Concrete

f. ASTM C143/C143M Standard Test Method for Slump of Hydraulic-Cement Concrete

g. ASTM C150/C150M Standard Specification for Portland Cement

h. ASTM C173/C173M Standard Test Method for Air Content of Freshly Mixed Concrete by the Volumetric Method

i. ASTM C231/C231M Standard Test Method for Air Content of Freshly Mixed Concrete by the Pressure Method

j. ASTM C260/C260M Standard Specification for Air-Entraining Admixtures for Concrete

k. ASTM C494/C494M Standard Specification for Chemical Admixtures for Concrete

l. ASTM C595/C595M Standard Specification for Blended Hydraulic Cements

m. ASTM C618 Standard Specification for Coal Fly Ash and Raw or Calcined Natural Pozzolan for Use in Concrete

n. ASTM C989 Standard Specification for Slag Cement for Use in Concrete and Mortars

o. ASTM C1157/C1157M Standard Specification for Hydraulic Cement

p. ASTM C1260 Standard Test Method for Potential Alkali Reactivity of Aggregates (Mortar-Bar Method)

q. ASTM C1293 Standard Test Method for Determination of Length Change of Concrete Due to Alkali-Silica Reaction

r. ASTM C1567 Standard Test Method for Potential Alkali-Silica Reactivity of Combinations of Cementitious Materials and Aggregate (Accelerated Mortar-Bar Method)

s. ASTM C1602/C1602M Standard Specification for Mixing Water Used in Production of Hydraulic Cement Concrete

t. ASTM E329 Standard Specification for Agencies Engaged in the Testing and/or Inspection of Materials Used in Construction

1.04 ADMINISTRATIVE REQUIREMENTS

A. Coordination, Sequencing, and Scheduling: per Division 01 General Requirements.

1.05 SUBMITTALS

A. Submit in accordance with the Division 01 General Requirements.

1. Product Data for admixtures

2. Design data for each concrete mixture design proposed for use in the Work.

3. Test Reports

a. Provide reports by testing agencies meeting ASTM E329.

b. Cement: certified mill reports.

c. Aggregate: Provide aggregate test data not be older than 90 days, except test data for soundness per ASTM C88 and alkali reactivity per ASTM C1260, ASTM C1293, or ASTM C1567 not older than 1 year.

1) Fine and coarse aggregate data for aggregates proposed for use, including sources, specific gravity, sieve analyses per ASTM C33/C33M (including fineness modulus of fine aggregate), potential alkali reactivity (not required if a cement containing less than 0.60% alkalis is used, per ASTM C33/C33M) per ASTM C1260, ASTM C1293, or ASTM C1567, and soundness per ASTM C88. Test data of organic impurities for fine aggregate per ASTM C40.

d. Concrete (for each mixture):

1) Proportions for all ingredients, 28-day design compressive strength, water to cementitious materials ratio, admixture dosages, slump, and air content.

2) Test data supporting proportions based upon laboratory trial batches or field test records per ACI 301 Section 4, "Concrete Mixtures". Field test data used to determine the standard deviation used for establishing the required average design strength shall be from within the previous 12 months, per ACI 301. Field test data documenting that the proposed concrete proportions will produce an average compressive strength equal to or greater than the required average compressive strength shall be from within the 12 months. Laboratory trial batch data shall be from within the previous 24 months. Submit at minimum 14 days before initial placement of concrete.

e. Supplementary Cementitious Materials

1) Fly Ash: source and test reports for actual fly ash to be used in the Work.

2) Ground Granulated Blast-Furnace Slag: source and test reports for actual slag to be used in the Work.

4. Manufacturer's Instructions for admixtures.

B. Closeout and Maintenance Material Submittals: per Division 01 General Requirements.

1.06 QUALITY ASSURANCE

A. Provide in accordance with Division 01 General Requirements.

1.07 DELIVERY, STORAGE, AND HANDLING

A. Provide in accordance with Division 01 General Requirements.

PART 2 – PRODUCTS

2.01 SOURCE

A. Provide concrete supplied from a single commercial ready-mix plant, mixed and delivered in accordance with the requirements of ASTM C94/C94M.

2.02 CONCRETE MATERIALS

A. Concrete mixture design:

1. Per ACI 301, Section 4, "Concrete Mixtures".

2. 28-day design compressive strength: 4,500 pounds per square inch, except as otherwise specified.

3. Water to cementitious materials ratio: not to exceed 0.42 except as otherwise specified.

4. Provide designs of required strength, water to cementitious materials ratio, slump, and workability for placing conditions and specified finishes without segregation.

5. Slump

   a. Per ASTM C143/C143M.

   b. Four inches, unless otherwise specified, with tolerance at point of delivery per ACI 117.

   c. Two to 4 inches before specified high-range water reducing admixture is added, and maximum slump of 8 inches at the point of delivery after admixture is added.

B. Cement: per ASTM C150/C150M, Type II or ASTM C595/C595M IP(MS), IS(<70)(MS). Do not use ASTM C595/C595M cements that contain ASTM C1157/C1157M cement.

C. Supplementary cementitious materials

1. Fly ash (optional):

a. ASTM C618, Class F.

b. Maximum loss of ignition: 3.0 percent.

c. Not less than 15 percent or more than 25 percent of weight of cement plus fly ash.

2. Ground-granulated blast furnace (GGBF) slag (optional):

a. ASTM C989.

b. Activity classification: Grade 100 or 120.

c. Not less than 25 percent or more than 50 percent of weight of cementitious material.

3. Fly ash plus GGBF slag

a. Maximum 50 percent of total cementitious materials.

b. Fly ash portion maximum 25 percent of total cementitious materials.

c. Minimum portland cement: 337 pounds per cubic yard of concrete.

D. Aggregate

1. ASTM C33/C33M, as amended herein. Evidence of a satisfactory service record in lieu of testing for alkali reactivity is not permitted.

2. Do not use crushed hydraulic cement concrete for aggregate.

3. Aggregate reactivity testing: per ASTM C1260. Do not use aggregrate having a 14 day expansion greater than 0.10 percent (considered potentially reactive), except if tested per ASTM C1567 the 14 day expansion is not greater than 0.10 percent, or if tested per ASTM C1293, the 2-year expansion is not greater than 0.04 percent, or if cement containing less than 0.60% alkalis is used per ASTM C33/C33M.

4. Fine Aggregates: sand or screenings of gravel or crushed stone, well graded from fine to coarse; clean and free from soft particles, clay, loam and organic matter, with the volume removed by sedimentation not more than 3 percent.

a. Organic impurities testing: Per ASTM C40. Color of the supernatant liquid above the test sample: not darker than organic plate No. 3.

b. Grading

U.S. Standard Sieve	Percent Passing
Size 3/8 inch	100

No. 4	95 - 100
No. 8	80 - 100
No. 16	50 - 85
No. 30	25 - 60
No. 50	5 -30
No. 100	0-10

c. Not more than 45 percent retained between any two consecutive sieves listed above. Fineness modulus: not less than 2.3 nor more than 3.1.

5. Coarse Aggregates: crushed stone or washed gravel of clean, hard, durable, uncoated particles, free from dust, dirt, or other deleterious substances; and free from thin, flat or elongated particles.

a. Nominal maximum aggregate size, except as otherwise approved: 3/4 inch.

b. Nominal maximum aggregate sizes per grading in Table 2 of ASTM C33/C33M: No. 67 (3/4 inch).

E. Water:

1. Meet ASTM C1602/C1602M.

2. Fresh and free from oil, acid, salt, alkali, sewage, organic matter, and other deleterious substances.

3. The amount of water carried on the aggregate and the effect of admixtures, is included in the water content. Provide that water carried on the aggregate is determined periodically by test and the amount of free water on the aggregate subtracted from water added to the mixture.

4. Residual, wash, and/or other water in drums: completely discharged prior to concrete batching (drums backed out).

5. Maximum amount of water: that required to produce a plastic mixture of the strength and water to cementitious materials ratio specified and the required density, uniformity and workability. Consistency of mixture: that required for the specific placing conditions and methods.

6. Slump adjustment: not made at wash down, "slump rack," or by any other means prior to arrival at point of delivery at the Site.

7. Water added after arrival at Site: accurately metered and recorded on the batch ticket.

F. Admixtures

1. Air-entraining admixture:

a. Per ASTM C260/C260M and chloride free.

b. Provide air entrainment per manufacturer's directions and this Specification to produce the following total entrained air content determined per the procedure in ASTM C173/C173M or ASTM C231/C231M.

Nominal Maximum Size Coarse Aggregate (inches)	Air Content By Volume (percent plus or minus 1.5)
3/4	6.0

2. Mid-range water reducing agents: per ASTM C494/C494M, Type A, and with consideration of the air entraining effect of the water reducing agent.

3. Water reducing-retarding agents: for use when ambient temperature above 70°F, replace water reducing agent in whole or part with water reducing-retarding agent meeting ASTM C494/C494M, Type D. Use amounts to produce concrete with set time equal to that at 70°F without the retarder.

4. Set accelerator: non-chloride type conforming to ASTM C494/C494M, Type C or E where allowed under Section 03 30 20.

5. High-range water reducing agent: ASTM C494/C494M, Type F or G (added in plant or field).

2.03 SOURCE QUALITY CONTROL

A. Provide in accordance with Division 01 General Requirements.

PART 3 – EXECUTION

3.01 FIELD QUALITY CONTROL

A. Provide in accordance with Division 01 General Requirements.

B. Advise testing laboratory and field observers minimum 24 hours in advance of placing concrete to allow for scheduling observation and testing.

C. Assist testing laboratory and Engineer in obtaining and handling samples at the Site and other sources of material.

D. Provide space and electrical power at the Site for facilities to be provided by Owner's testing agency for proper initial curing and storage of concrete test cylinders to be lab-cured as required by ASTM C31/C31M for 48 hours after casting.

E. Owner's testing agency to store cylinders to be lab-cured at 60°F to 80°F in an environment preventing moisture loss from the specimens such as storage in wooden boxes, and placement in damp sand pits. Shield specimens from direct sunlight and radiant heating devices. Control storage temperature by use of heating and cooling devices as necessary and record temperature with a maximum-minimum thermometer.

3.02 CLOSEOUT ACTIVITIES

A. Provide in accordance with Division 01 General Requirements.

END OF SECTION

SECTION 03 30 53

CONCRETE SPECIALTIES

PART 1 – GENERAL

1.01 SUMMARY

A. Section Includes

1. Provide all materials, tools, equipment and labor necessary for the construction of concrete specialties as specified herein, as shown on the Contract Drawings, and as necessary for the proper completion of the Work in accordance with this section and applicable reference standards listed in Article 1.03. Concrete expansion anchors are specified herein, but shall be provided and installed under the section that corresponds to the materials and/or equipment that is to be so anchored.

B. Related Requirements

1. 03 30 00 Cast-In-Place Concrete

2. 03 35 00 Concrete Placing, Curing and Finishing

1.02 PRICE AND PAYMENT PROCEDURES

A. Measurement and payment requirements: per Division 01 General Requirements.

1.03 REFERENCES

A. Reference Standards

1. ASTM C1107/C1107M – Standard Specification for Packed Dry, Hydraulic-Cement Grout (Nonshrink)

2. ACI 355.2 – Qualification of Post-Installed Mechanical Anchors in Concrete

1.04 ADMINISTRATIVE REQUIREMENTS

A. Coordination, Sequencing, and Scheduling: per Division 01 General Requirements.

1.05 SUBMITTALS

A. Submit in accordance with Division 01 General Requirements.

B. Product Data and Manufacturer's Instructions

1. Non-Shrink Grout

2. Expansion Anchors

C. Design Data and Test Reports

1. Concrete for equipment pads, ductbanks

a. Submittals as required in 03 30 00.

D. Shop Drawings

1. Reinforcement

E. Closeout and Maintenance Material Submittals: per Division 01 General Requirements.

1.06 QUALITY ASSURANCE

A. Provide in accordance with Division 01 General Requirements.

B. Expansion Anchors

1. Qualified for earthquake loading (use in cracked concrete) in accordance with ACI 355.2.

1.07 DELIVERY, STORAGE, AND HANDLING

A. Provide in accordance with Division 01 General Requirements.

1.08 SITE CONDITIONS

A. Existing Conditions: per Division 01 General Requirements.

PART 2 – PRODUCTS

2.01 GROUT

A. Grout shall be non-metallic, cementitious non-shrink grout meeting ASTM C1107/C1107M, grade C. Grout shall be Five Star Grout by U.S. Grout Company, Crystex or Premier by L&M Construction Chemicals, Inc., Sure-Grip High Performance Grout, by Dayton Superior, or approved equal.

2.02 EQUIPMENT PADS

A. Concrete shall be as specified in 03 30 00, except it shall have a 3/4-inch maximum aggregate size, a 28-day design compressive strength of 4,500 pounds per square inch, and a maximum water-to-cementitious ratio of 0.45.

2.03 DUCTBANKS

A. All underground electrical ductbanks shall be concrete encased. Concrete shall be as specified in 03 30 00, except it shall have a 3/8 inch maximum aggregate size and a minimum 28-day compressive strength of 3,000 pounds per square inch.

B. Ductbanks shall be reinforced as detailed where crossing under roads, driveways, parking areas, all areas subject to vehicular traffic, and whereas shown or specified in the Contract Documents. Reinforcement shall extend a minimum of 4 feet beyond the specified areas.

2.04 EXPANSION ANCHORS

A. Approved for use in cracked concrete: Hilti Kwik Bolt TZ, Hilti HSL, or approved equal.

B. For anchoring aluminum, all submerged locations, and as noted on the Drawings: AISI 316 stainless steel.

2.05 SOURCE QUALITY CONTROL

A. Provide in accordance with Division 01 General Requirements.

PART 3 – EXECUTION

3.01 EQUIPMENT PADS

A. All equipment pads shall be sized to suit the approved equipment, and reinforcement shall be as shown on the Contract Drawings.

B. The top surface shall be level within 1/8-inch. All exposed faces shall be formed with smooth forms and shall be smooth and free of sands streaks, bug holes, and honeycomb. All exposed surfaces shall have a smooth, even surface with all exterior corners chamfered. Exposed faces of pads shall receive a rubbed finish as specified in 03 35 00.

C. All anchor bolts, dowels, sleeves, and other fittings required for the equipment shall be built in.

3.02 GROUTING

A. Grouting is required for structural, mechanical, and electrical items, and shall be in accordance with the manufacturer's recommendations.

B. Concrete surfaces to receive grout shall be cleaned of all contamination and debris. Surface roughening shall be required if laitance or poor concrete is evident.

C. Grout placement shall be rapid and continuous such that grout completely fills the space to be grouted, absent of air pockets.

D. Grout may be placed by gravity or pumped. When practical, grout shall be placed from one side and made to flow to the open side to prevent the formation of air pockets.

3.03 DUCTBANKS

A. There shall be a minimum of 4 inches of concrete between the outside of a duct and surrounding soil. There shall be not less than 3 inches of concrete between adjacent ducts.

B. All ductbank concrete placements shall be continuous between manholes/handholes and between manholes/handholes and structures.

C. Where ducts pass through a foundation wall, the concrete encasement shall extend through the wall and be flush with inside face per the details on the Contract Drawings. Watertight construction joints shall be provided.

3.04 EXPANSION ANCHORS

A. Anchors shall be installed by qualified personnel.

B. Expansion anchors shall be installed in strict accordance with the Manufacturer's Printed Installation Instructions (MPII).

C. Each installer shall at all times have in their possession the MPII.

D. Embedded reinforcement shall be located with the proper equipment prior to drilling to ensure that each drilling location does not coincide with existing reinforcement. Drilling through reinforcement shall be prohibited.

E. Diamond drill bits shall not be permitted. Hammer drills shall be used.

3.05 FIELD QUALITY CONTROL

A. Provide in accordance with Division 01 General Requirements.

3.06 CLOSEOUT ACTIVITIES

A. Provide in accordance with Division 01 General Requirements.

END OF SECTION

SECTION 03 35 00

CONCRETE PLACING, CURING, AND FINISHING

PART 1 – GENERAL

1.01 SUMMARY

A. Section Includes

1. Provide all materials, tools, equipment and labor required for the placing, curing and finishing of all cast-in-place concrete as shown on the Contract Drawings, as specified herein, and as necessary for the proper completion of the Work in accordance with this Section and applicable reference standards listed in Article 1.03.

1.02 PRICE AND PAYMENT PROCEDURES

A. Measurement and payment requirements: per Division 01 General Requirements.

B. During the progress of the Work, an independent, accredited and certified testing laboratory shall conduct concrete testing as specified herein, including the preparation and testing of concrete cylinders. All such testing shall be paid for by the Owner.

C. The Engineer may order load and/or core tests in accordance with ASTM C42/C42M. Such testing shall be paid for by the Owner if the concrete is proven to meet the requirements of the Contract Documents, and by the Contractor otherwise. The Contractor shall also pay for all testing costs associated with any and all Work to be replaced.

1.03 REFERENCES

A. Reference Standards

1. ACI 117 - Specifications for Tolerances for Concrete Construction and Materials and Commentary

2. ACI 301 - Specifications for Structural Concrete

3. ACI 306.1 - Standard Specification for Cold Weather Concreting

4. ACI 308.1 - Standard Specification for Curing Concrete

5. ACI 350.1 - Specification for Tightness Testing of Environmental Engineering Concrete Containment Structures

6. ACI 306R - Cold Weather Concreting

7. ASTM C31/C31M - Standard Practice for Making and Curing Concrete Test Specimens in the Field

8. ASTM C39/C39M - Standard Test Method for Compressive Strength of Cylindrical Concrete Specimens

9. ASTM C42/C42M - Standard Test Method for Obtaining and Testing Drilled Cores and Sawed Beams of Concrete

10. ASTM C143/C143M - Standard Test Method for Slump of Hydraulic-Cement Concrete

11. ASTM C144 - Standard Specification for Aggregate for Masonry Mortar

12. ASTM C171 - Standard Specification for Sheet Materials for Curing Concrete

13. ASTM C172 - Standard Practice for Sampling Freshly Mixed Concrete

14. ASTM C173/C173M - Standard Test Method for Air Content of Freshly Mixed Concrete by the Volumetric Method

15. ASTM C231/C231M - Standard Test Method for Air Content of Freshly Mixed Concrete by the Pressure Method

16. ASTM C309 - Standard Specification for Liquid Membrane-Forming Compounds for Curing Concrete

17. ASTM C404 - Standard Specification for Aggregates for Masonry Grout

18. ASTM C578 - Standard Specification for Rigid, Cellular Polystyrene Thermal Insulation

19. ASTM C881/C881M - Standard Specification for Epoxy-Resin-Base Bonding Systems for Concrete

20. ASTM C920 - Standard Specification for Elastomeric Joint Sealants

21. ASTM C1064/C1064M - Standard Test Method for Temperature of Freshly Mixed Hydraulic-Cement Concrete

22. ASTM C1315 - Standard Specification for Liquid Membrane-Forming Compounds Having Special Properties for Curing and Sealing Concrete

23. ASTM D1752 - Standard Specification for Preformed Sponge Rubber Cork and Recycled PVC Expansion

24. ASTM D2240 - Standard Test Method for Rubber Property - Durometer Hardness

25. ASTM E96/E96M - Standard Test Methods for Water Vapor Transmission of Materials

26. ASTM E 1155 - Standard Test Method for Determining Floor Flatness and Floor Levelness Numbers

27. ASTM E 1745 - Standard Specification for Water Vapor Retarders Used in Contact with Soil or Granular Fill under Concrete Slabs

1.04 ADMINISTRATIVE REQUIREMENTS

A. Coordination, Sequencing, and Scheduling: per Division 01 General Requirements.

1.05 SUBMITTALS

A. Submit in accordance with Division 01 General Requirements.

B. Product Data and Manufacturer's Instructions

1. Delivery Tickets

a. Provide duplicate delivery tickets AT TIME OF DELIVERY, one for the Contractor and one for the Engineer, for each truckload of concrete delivered.

b. Serial number of ticket.

c. Date and Project location.

d. Name and location of ready mixed concrete plant.

e. Truck number, time loaded, cubic yardage delivered.

f. Dispatcher's name.

g. Mixture design, cement type, and admixtures with brand names.

h. Types and quantities of cement, fly ash and/or slag (if included in approved mix design) and admixtures. Quantities of water and fine and coarse aggregate including moisture content, and nominal maximum aggregate size.

i. Water added subsequent to plant batching, if any. (Only applicable if total water per mixture design is not added at plant. Addition of water such that the water content of the approved mixture design is exceeded is strictly prohibited.)

j. Concrete temperature upon delivery.

k. Unloading time and location.

2. Curing Paper

3. Epoxy Bonding Compound

4. Evaporation Retardant

5. Floor Hardener

6. Membrane Curing Compound

7. Water Repellent

C. Source and Field Quality Control Submittals

1. Methods to be used to protect concrete placed during cold weather. The Engineer's review shall not constitute "approval" as the Contractor shall be responsible for the protection of concrete placed during cold weather.

2. Methods to be used to protect concrete placed during hot weather. The Engineer's review shall not constitute "approval" as the Contractor shall be responsible for the protection of concrete placed during hot weather.

D. Closeout and Maintenance Material Submittals: per Division 01 General Requirements.

1.06 QUALITY ASSURANCE

A. Provide in accordance with Division 01 General Requirements.

B. ACI 301 is hereby made a part of this specification, except as otherwise modified within the Contract Documents.

C. Evaluation of Concrete:

1. Concrete strength shall be evaluated in accordance with ACI 301 Section 1.6.5, "Evaluation of concrete strength tests", and Section 1.6.6, "Acceptance of concrete strength". The Engineer may order concrete that fails to meet the acceptance criteria removed and replaced at no additional cost to Owner.

2. Sampling and Testing

a. During the progress of the Work, an independent, accredited and certified testing laboratory shall conduct concrete testing as specified herein. All such testing shall be paid for by the Owner.

Concrete samples shall be taken in accordance with ASTM C172 for slump, entrained air, unit weight, and strength tests.

b. Pumped concrete shall be sampled and tested for slump and air content at the point of placement, as opposed to at the point of delivery. Upon the Engineer's approval: once the slump loss and the loss of entrained air due to pumping is established, correlated acceptance limits at the point of delivery, where sampling and testing may then be performed, shall be made applicable. When the pumpline configuration is changed significantly, sampling and testing shall again be performed at the point of placement until new acceptance limits at the point of delivery may be determined.

c. Concrete slump shall be measured in accordance with ASTM C143/C143M.

d. Tests for air content shall be performed in accordance with ASTM C173/C173M or ASTM C231/C231M, every time a set of concrete cylinders is prepared. Tests for air content shall also be performed after any and all slump adjustments are made.

e. Temperature shall be measured in accordance with ASTM C1064/C1064M.

f. Lab-Cured Cylinders

1) Lab-cured cylinders are required for all concrete on the project, and shall be in addition to field-cured cylinders, where provided.

2) Concrete cylinders shall be prepared in accordance with ASTM C31/C31M and be 6 inches diameter by 12 inches tall. One set of 4 cylinders shall be prepared for each 100 cubic yards, or fraction thereof, of each different mix placed in each single day. Cylinders shall be transported to the testing lab within 48 hours of forming, but not sooner than 8 hours after final set. See SECTION 03 30 00, CAST-IN-PLACE CONCRETE for initial storage and curing requirements of cylinders. Cylinders shall be tested for compressive strength in accordance with ASTM C39/C39M. One cylinder shall be tested at 7 days, two at 28 days, and one at 56 days. Test results shall be submitted directly to both the Engineer and the Engineer's on-site representative for review.

3. Construction will be considered potentially deficient if concrete fails to meet any requirements that affect the strength and durability of the structure, including but not necessarily limited to:

a. Low strength concrete per ACI 301, Section 1.6.5, "Evaluation of concrete strength tests", and Section 1.6.6, "Acceptance of concrete strength".

b. Water-to-cementitious materials ratio higher than that of the specified mix.

c. Reinforcing steel size, quantity, strength, position or arrangement that does not meet the requirements of the Contract Documents.

d. Reinforced concrete that differs from the dimensions or locations shown on the Contract Drawings.

e. Curing that does not meet the requirements of the Contract Documents, including premature formwork removal.

f. Hot or cold weather concreting that doesn't meet the requirements of the Contract Documents.

g. Mechanical damage from accidents or fire.

h. Poor construction practices.

1.07 SITE CONDITIONS

A. Existing Conditions: per Division 01 General Requirements.

1.08 ENVIRONMENTAL CONDITIONS

A. Protection

1. Provisions shall be made for maintaining new concrete in a continuously moist condition for at least seven days after placement.

2. Fresh concrete shall be protected from freezing, premature drying, flowing water, and mechanical injury.

3. Concrete shall not be placed while rain, sleet, or snow is falling unless acceptable protection is provided. Precipitation shall not be allowed to enter into the concrete mix or damage concrete surfaces.

B. Cold Weather Requirements

1. ACI 306.1 is hereby made a part of this specification, except as otherwise modified within the Contract Documents.

2. Cold weather concreting provisions shall be followed during cold weather: any and all periods when for more than three consecutive days the average daily outdoor temperature drops below 40 ^{o}F. (The average daily temperature is the average of the highest and lowest temperature during

the period from midnight to midnight.) When temperatures higher than 50 °F occur during more than half of any 24-hour duration, the period shall not be regarded as cold weather.

3. When freezing temperatures may occur during periods not defined as cold weather, concrete surfaces shall be protected against freezing for at least the first 24 hours after placing.

4. Concrete shall not be placed on frozen subgrade. Insulate or heat subgrade to ensure temperature above 32 °F when concrete is placed.

5. All embedments having a cross sectional area of 1.0 square inch or greater, and including #9 reinforcing bars, shall be at a temperature not less than 10 °F at time of concrete placement.

6. Thermal protection must be provided immediately after concrete placement. Procedures for covering, insulating, housing, and/or heating concrete shall be prearranged. Except when supplemental heat is provided, the R-value of the insulation shall be per the recommendations of chapter 9 of ACI 306R.

7. Accelerating admixtures shall be approved at the Engineer's discretion, however those containing calcium chloride shall not be permitted.

8. When combustion heaters are used, flue gases shall be vented to the exterior of enclosures.

9. Concrete shall be placed and maintained at the following minimum concrete placement temperatures (measured at concrete surface):

   a. Sections of less than 12 inch minimum dimension: 55 °F.

   b. Sections of 12 to 36 inch minimum dimension: 50 °F.

10. The concrete placement temperature shall not be higher than the minimum concrete placement temperature by more than 20 °F.

11. The minimum concrete temperature as mixed shall be: 5 °F higher than the minimum concrete placement temperature when the air temperature is above 30 °F; 10 °F higher when the air temperature is between 0 and 30 °F; and 15 °F higher when the air temperature is less than 0 °F.

12. The temperature shall be monitored at the surface of the concrete, including at corners and edges, which are more vulnerable to freezing. The concrete surface temperature and the corresponding outside air temperature shall be recorded a minimum of twice per each 24 hour period.

13. Concrete shall be maintained at the minimum specified temperatures for a protection period of 6 days. When an approved accelerating admixture is used the protection period may be reduced to 4 days.

14. Concrete shall be cooled gradually at the end of the protection period. The maximum allowable temperature drop at the concrete surface during the first 24 hours after the protection period shall be: 50 °F for concrete sections of less than 12 inch minimum dimension; and 40 °F for concrete sections of 12 to 36 inch minimum dimension.

C. Hot Weather Requirements

1. The temperature of the concrete when placed shall not exceed 90 °F. When the air temperature is 90 °F and above, procedures to cool mixture ingredients may be warranted. These include: providing shaded storage for aggregate, frequent sprinkling or fog spraying of coarse aggregate, and using chilled batch water and/or ice. Forms and reinforcement shall be sprinkled with cold water just prior to concrete placement. When possible, placement of slabs should be scheduled after walls and roof structure are in place in order to minimize problems associated with direct sunlight and/or drying winds. Newly placed concrete shall be protected from the direct sunlight.

2. Records shall be maintained of: time and location of concrete placement, air temperature, weather conditions (i.e. calm, windy, clear, and/or cloudy), relative humidity, and concrete temperature as delivered and after placement.

3. When the air temperature is 90 °F and above: the time between the addition of water to cement or cement to aggregate (whichever occurs first) and the time of concrete placement shall not exceed 60 minutes, except upon approval of the Engineer when all tests for air content, slump and temperature are acceptable.

PART 2 – PRODUCTS

2.01 MEMBRANE CURING COMPOUND

A. Use of membrane curing compound shall be permitted except where prohibited in Part 3 of this Section. It shall conform to ASTM C309, Type 1, and ASTM C1315, Type 1 with minimum 25 percent solids. Kure 1315, by Sonneborn; Vocomp-25, by W.R. Meadows; Dress & Seal WB 25, by L&M Construction Chemicals, Inc.; or approved equal shall be provided.

2.02 CURING PAPER

A. Curing paper shall conform to ASTM C171, for regular or white waterproof paper.

PART 3 – EXECUTION

3.01 CONCRETE PLACEMENT AND JOINTING

A. Tolerances: Tolerances shall conform to all requirements of ACI 117 except as otherwise modified by the Contract Documents.

B. Placing

1. Concrete shall be handled from the truck to the place of final deposit as rapidly as practicable by methods preventing segregation and/or loss of ingredients.

2. The time between the addition of water to cement, or cement to aggregates (whichever occurs first), and the placement of concrete shall not exceed 90 minutes. When air temperature is 90 °F and above, this time shall be reduced to 60 minutes. These times may be exceeded only upon approval of the Engineer, and only if all tests for air content, slump, and temperature are also acceptable.

3. Water shall be removed from all forms and excavations and the Work shall be kept dry during placement. No water shall be thrown on, allowed to flow over, or rise upon the concrete until it is thoroughly set.

4. Prior to placement of slabs on soil, the subgrade shall be moist with no free water and no muddy or soft spots.

5. The concrete shall be directly deposited as close as possible to its final location, and shall be deposited in such manner so as to maintain a homogeneous, plastic, approximately horizontal surface.

6. Where concrete may contact soil while being placed, free fall shall be limited to a maximum of 3 feet. Concrete that has been contaminated by soil and/or other foreign matter shall be rejected. The accumulation of concrete on the forms and/or on reinforcement above the level of placement shall be avoided. The splashing of concrete upon formwork that is set for a subsequent concrete placement shall be prevented due to the resulting marks on the finished concrete.

7. Retempering of concrete and concrete placement against partially hardened concrete shall not be permitted. A concrete placement, once

started, shall be carried out as a continuous operation until the placement of the entire section between construction joints is complete.

C. Runways: Runways shall be provided for wheeled concrete handling equipment which shall not be wheeled over reinforcement. Runways shall not be supported upon reinforcement that is part of the Work.

D. Chuting

1. Minimum slope shall be 3 horizontal to 1 vertical and maximum slope shall be 2 horizontal to 1 vertical. Between these limits, the slope shall be that which will prevent segregation and ensure continuous flow.

2. A baffle shall be provided at the end of the chute to prevent segregation. If the end of the chute is more than 3 feet above the surface of deposit, a spout shall be used. The spout shall be kept full of concrete with the end kept as near as practical to the surface of deposit.

3. The chute shall be steel or steel lined, and sections shall have the same slope throughout. Aluminum chutes are not permitted.

4. The chute shall be thoroughly flushed with water before and after each use, the water discharged outside the forms.

E. Pumping: The inside diameter of pipes and hoses used to convey the concrete shall be a minimum of three times the maximum size aggregate of the mixture. In order to minimize altering the concrete properties, long vertical sections at the end of the pumpline shall be avoided. A horizontal hose run, a hose loop, or a slide gate at the end of the hose may be used to reduce loss of entrained air.

F. Compaction

1. Provide at least one standby vibrator, and at least one for each three in use.

2. Concrete shall be placed in layers not exceeding 12 inches in depth. Each layer shall be compacted by mechanical internal vibrating equipment supplemented by hand spading, rodding, and tamping as required.

3. Vibrators shall be relocated frequently, and over-vibration resulting in segregation shall be prevented. Vibrators shall not be used to move concrete within the forms. Concrete shall be thoroughly consolidated around reinforcement, embedments, and into the corners of the forms.

4. Ensure that vibrator is kept several inches clear of waterstops.

5. Where internal vibration is impractical, the use of form vibrators will be considered, and will be allowed only with the Engineer's written approval. When allowed, the vibrator shall be placed so that motion is horizontal.

G. Construction Joints

1. Unless noted otherwise in the Contract Documents, "construction joint" shall refer to a monolithic construction joint in which the surface between successive placements is prepared to enhance bond and shear transfer, and all reinforcement is continuous. Construction joints shall be located where shown on the Drawings, or, if not shown, locations shall be approved by the Engineer. Where required to be watertight, waterstops as specified in SECTION 03 11 00, CONCRETE FORMING shall be used.

2. Horizontal construction joints: laitance shall be removed immediately after initial set and the surface shall roughened in an acceptable manner that exposes the aggregate uniformly and doesn't leave laitance or loose aggregate. After the concrete has set to a degree that precludes laitance removal by shovels or scrapers, the Contractor shall remove it, and create a roughened surface, by waterjetting or other effective method. The use of pneumatic hammers is not permitted.

3. Vertical construction joints: the surface shall be thoroughly cleaned of laitance by waterjetting, or by wire brushing followed by air blasting.

4. Before concrete is placed against set concrete, the surface shall be thoroughly wetted with standing water removed. Horizontal construction joints shall be in a saturated surface dry condition: saturated for a minimum of 6 hours, with standing water removed.

5. Reinforcement shall be continuous at construction joints unless otherwise shown on the Contract Drawings. Waterstops shall be provided where called for in the Contract Documents. All necessary precautions to ensure that the waterstop is properly located and aligned and remains so during concrete placement shall be taken. In the event that the waterstop is improperly located, allowing a tolerance of plus or minus 1/2-inch, the Engineer may order the waterstop extended, or replaced, or such other action as deemed necessary, and at no additional cost to the Owner.

3.02 CURING AND PROTECTION

A. Temperature

1. When the ambient temperature falls below 40 ^{o}F or rises above 95 ^{o}F, a record shall be kept of concrete temperatures and of protection given to concrete during placement and curing.

2. The temperature of in-place concrete shall be the surface temperature of the concrete. The surface temperature may be determined by placing temperature sensors in contact with concrete surfaces or between concrete surfaces and covers used for curing, such as insulation blankets or plastic sheeting.

B. Curing

1. ACI 308.1 is hereby made a part of this Section, except as otherwise modified within the Contract Documents.

2. During cold weather as previously defined, except when a heated protective enclosure is provided, the application of water shall not be required.

3. Provisions shall be made for maintaining new concrete in a continuously moist condition for a minimum of 7 days. Curing shall commence as soon as possible after final finishing when it will not mar, erode, or stain the concrete surface.

4. Curing shall be accomplished by the use of curing paper, curing compounds (except as noted below), wet methods (ponding, fog spray, damp sand or burlap, sprinkling, soaker hoses) or other methods.

5. Water used for curing shall be no more than 20 ^{o}F cooler than the concrete surface temperature.

6. The use of a curing compound on surfaces to receive a rubbed finish will not be allowed. Where used, curing compound shall be applied immediately following the disappearance of the surface water sheen after the final finishing pass for slabs, and immediately upon removal of forms for formed concrete. It shall applied uniformly by spray, leaving no pinholes or gaps, at a coverage rate of 250-350 square feet per gallon for the first coat. A second coat of 300-400 square feet per gallon shall be applied after the first coat has dried. The above application rates are based on A.C. Horn; other manufacturer's recommendations may vary.

7. Soaker hoses shall be used at tops of walls and columns before forms are removed. Wood forms shall be kept continuously wet in hot weather.

3.03 DEFECTIVE CONCRETE

A. The Engineer may direct the Contractor to remove and replace, at no additional cost to the Owner, concrete Work that is not formed as shown and/or specified in the Contract Documents, or that contains a defective surface.

B. Upon the Engineer's approval, minor imperfections may be patched as specified herein.

3.04 REPAIR OF SURFACE DEFECTS AND PATCHING

A. Immediately after form removal, all form ties shall be cut off, all fins and irregularities removed, and all defective areas, holes, honeycombs, cavities and irregularities cleaned and patched in accordance with SECTION 03 01 05, CONCRETE REPAIR. (Bugholes larger than 3/4 inch in any dimension shall be considered a defect.) Exposed patchwork shall be rubbed where and as specified herein or otherwise treated to match adjacent surfaces, and cured and protected as specified for concrete.

B. Filling Form Tie Holes: Tie holes shall be filled solid with mortar in the same manner as specified under patching above.

3.05 FINISH OF FORMED SURFACES

A. General

1. Concrete surfaces "exposed to view" shall be defined as those exposed to view upon completion of the Work. Surfaces which will be covered by fill, such as exterior faces of walls, shall not be considered exposed to view.

2. Surface tolerance classes indicated herein are specified in ACI 117, and include abrupt surface irregularities that are measured within 1-inch of the irregularity, and gradual surface irregularities measured as the maximum gap between the concrete and the near surface of a 5-foot straight-edge, measured between contact points.

B. Surface Finish-1.0 (SF-1.0)

1. SF-1.0 shall be provided for formed surfaces not exposed to view. Provide SF-1.0 to face of walls in areas that are to be below finish grade.

2. Patch voids larger than 1 1/2-inch wide or 1/2-inch deep.

3. Remove projections larger than 1-inch.

4. Tie holes need not be patched.

5. Surface tolerance Class D, with formed surface irregularities not more than 1-inch.

C. Environmental Surface Finish-3.0 (ESF-3.0)

1. ESF-3.0 shall be provided for formed surfaces exposed to view. ESF-3.0 shall be followed with a grout-cleaned rubbed finish as described below.

2. Remove projections larger than 1/8-inch.

3. Fill tie holes.

4. Surface tolerance Class A, with formed surface irregularities not more than 1/8-inch.

D. Grout-cleaned rubbed finish

1. All interior and exterior concrete surfaces that: are exposed to view shall receive a grout-cleaned rubbed finish and shall have a smooth and even surface, free of bug holes, when completed.

2. Wet the surface, and apply a thin coat of medium consistency neat cement slurry to the concrete surface by means of bristle brushes to provide a bonding coat. Before the slurry has dried or changed color, grout comprising one part cement to 1 1/2 parts sand meeting ASTM C144 or ASTM C404, with sufficient water to produce the consistency of thick paint, shall be applied and scrubbed into voids, with excess removed. The cement shall be that used in the concrete mix adjusted with white cement as necessary to match color of exposed concrete. Grout shall be applied with slightly damp pads of coarse burlap approximately 6 inches square used as a float, and shall be well scrubbed into the surface to provide a dense mortar.

3. The mortar shall be allowed to partially harden for 1 to 2 hours depending upon weather conditions. Work in direct hot sunlight shall be avoided. In hot dry conditions the concrete shall be kept damp during this period with a fine fog spray. Grout shall not be allowed to remain on the surface too long as it will become very difficult to remove. Grout shall not be left on the concrete overnight.

4. After the grout has hardened sufficiently, all that can be removed with a trowel shall be.

5. The surface shall then be allowed to dry thoroughly, and be rubbed vigorously with clean, dry burlap to completely remove any dried grout. There should be no visible film of grout remaining after rubbing.

6. The entire rubbing operation shall be completed in a single working day. Sufficient time shall be allowed for this.

7. On the following day the concrete shall again be wiped clean with dry burlap to remove dust. The use of burlap containing old hardened mortar

may be used since it will act as a mild abrasive. After this treatment no build-up film should remain on the surface, but if it does, a fine abrasive stone shall be used to remove it without breaking through the surface film of the parent concrete. Do not work up a lather.

8. After application of the surface grout, the surface shall be thoroughly washed down with stiff brushes and the concrete maintained in a continuously damp condition for at least three days above 50 °F by the periodic application of a fine fog spray, the use of damp fabric covered with polyethylene or other methods.

3.06 FINISHING OF RELATED UNFORMED SURFACES

A. Tops of exposed walls and similar unformed surfaces shall be struck off smooth and hand steel troweled to produce a smooth hard level surface. Line and elevation shall be pre-established by means of preset wood screeds which shall be removed during the troweling operation.

B. After troweling is completed and after the curing period, the surface shall be dry honed to a smooth non-directional surface texture satisfactory to the Engineer.

3.07 FINISH OF SLABS

A. General

1. Slabs shall be true to the gradient and elevation shown on the Contract Drawings. Flat Slabs shall be level with a tolerance of 1/8 inch in 10 feet.

2. Loss of bleed water and surface drying shall be allowed to proceed naturally. Means to accelerate drying such as applying dry cement, sand, or other materials shall be prohibited.

B. Floated Finish

1. Slabs of decant structures shall receive a floated finish. After consolidating, screeding and leveling, the slab shall not be worked further until it is ready for floating.

2. Floating shall begin when the water sheen has disappeared, and when the slab has stiffened sufficiently to allow proper operation of a power-driven float. Hand floating with wood, aluminum or magnesium floats shall be used at locations inaccessible to the power-driven float.

3. Surface trueness shall be verified at this stage with a 10 foot straightedge applied in multiple angles. High spots shall be cut down and low spots filled so that the finished surface is true. The slab shall then be immediately refloated to a uniform, smooth, granular texture.

C. Broom Finish: A broom finish shall be provided for all exterior pads. After floating, and between initial and final set, the surface shall be given a coarse transverse scored texture by drawing a broom across the surface.

3.08 CLEANING CONCRETE

A. Cleaning during progress of the Work shall not be permitted. Cleaning shall not commence until the structure is entirely completed.

B. Rust and other stains and discolorations shall be removed with a non-etching cleaning agent used in accordance with the manufacturer's instructions. Cleaning of all surfaces to receive a painted finish is also required.

C. Rust stains may be removed by applying a bleaching agent such as oxalic acid. Acid etching, sandblasting, or cleaning by other methods may be used as approved by the Engineer.

END OF SECTION

SECTION 05 50 00

METAL FABRICATIONS

PART 1 – GENERAL

1.01 SUMMARY

A. Section Includes

1. Provide the following metal fabrications in accordance with this Section and applicable reference standards listed in Article 1.03.

   a. Railings and components including mounting brackets

   b. Grating and grating supports

1.02 PRICE AND PAYMENT PROCEDURES

A. Measurement and payment requirements: per Division 01 General Requirements.

1.03 REFERENCES

A. Reference Standards

1. American Welding Society (AWS)

   a. AWS D1.2/D1.2M Structural Welding Code - Aluminum

2. ASTM International (ASTM)

   a. ASTM B209 Standard Specification for Aluminum and Aluminum-Alloy Sheet and Plate

   b. ASTM B211 Standard Specification for Aluminum and Aluminum-Alloy Bar, Rod, and Wire

   c. ASTM B308/B308M Standard Specification for Aluminum-Alloy 6061-T6 Standard Structural Profiles

3. National Association of Architectural Metal Manufacturers (NAAMM)

   a. AMP 500 Metal Finishes Manual

   b. MBG 531 Metal Bar Grating Manual

   c. MBG 533 Welding Specification for Fabrication of Steel, Aluminum, & Stainless Steel Bar Grating

1.04 ADMINISTRATIVE REQUIREMENTS

A. Coordination, Sequencing, and Scheduling: per Division 01 General Requirements.

1.05 SUBMITTALS

A. Submit in accordance with Division 01 General Requirements.

B. Shop Drawings

1. Details of connections, copes, splices, holes, hardware, finish, and other pertinent information

2. Indicate welds by standard AWS symbols.

C. Samples and Mockups: as specified in Article 1.06.

D. Source and Field Quality Control Submittals

E. Certificates

1. Mill test reports for structural shapes, bolts, nuts, and washers

2. Welding certifications for welding procedures and personnel

F. Closeout and Maintenance Material Submittals: per Division 01 General Requirements.

1.06 QUALITY ASSURANCE

A. Provide in accordance with Division 01 General Requirements.

B. Samples

1. Railings indicating weld, splicing, and finish

1.07 DELIVERY, STORAGE, AND HANDLING

A. Provide in accordance with Division 01 General Requirements.

B. Carefully unload material and equipment and stack to prevent deformation and damage. Store items on substantial pallets, dunnage, or other supports and spacers, free from the earth and properly drained, preventing splattering with dirt and other foreign matter.

C. Store material and equipment to permit easy access for inspection and identification. Protect from deterioration and maintain markings.

D. Provide protective storage for fastener components. Protect fastener components removed from protective storage from dirt and moisture in closed containers at the location of installation. Do not clean or modify fastener components from as-delivered condition. Do not use fastener components accumulating rust or dirt, and remove from the Site.

1.08 SITE CONDITIONS

A. Existing Conditions: per Division 01 General Requirements.

PART 2 – PRODUCTS

2.01 GENERAL

A. Make field measurements prior to fabrication to ensure proper fit. Report discrepancies in existing conditions that require detail changes to Engineer prior to fabrication.

B. Assemble built-up Work in sections in the shop as much as practicable and match mark components for field assembly.

C. Bolt holes: by fabricator and not made or modified by burning.

D. Fusion weld aluminum by the inert gas-shielded arc method per ANSI/AWS D1.2. Use alloy rods similar to alloy being welded where appearance match is required. Alloy 4043 rods may be used where appearance is not a factor and anodizing is not required.

E. Aluminum items: fabricated from bars, plates, pipes, rolled and extruded shapes conforming to the following alloy designation unless otherwise specified.

1. Standard structural shapes: rolled 6061-T6 per ASTM B308/B308M.

2. Rolled rod and bar: 6061-T6 per ASTM B211.

3. Sheets, Plates, Checkered Plates: 6061-T6 per ASTM B209.

4. Bolts: 2024-T4.

5. Nuts: 6061-T6.

6. Washers: Alclad 2024-T4.

F. Stainless steel items: Type 316.

2.02 ALUMINUM RAILING

A. Aluminum railing: all-welded construction formed of 1-1/2 inch round aluminum pipe.

B. Furnish railing in the largest practical sections with the locations and details of field connections indicated on shop drawings. Close exposed ends of railing members. After fabrication, clean, lightly circumferentially brush, caustic etch and clear anodize (0.4 mil minimum thickness) railings in accordance with NAAMM AMP 500, M31C22A31.

C. Welds: continuous at intersections and ground smooth on all exposed areas. Use radius corners only; do not use mitered corners. Where intersections occur, shape and cut pieces to fit with no distortion of the circular shape.

D. Posts:

1. Schedule 80, alloy 6061-T6, single unspliced pipe length.

2. Spacing: maximum 4 feet on centers measured along the rail.

E. Rails:

1. Schedule 40, alloy 6063-T6.

2. Top rails:

a. Continuous wherever possible with single unspliced length attached to minimum of 3 posts.

b. At platforms and other level runs: 42 inches from the top of rail to floor, tank wall or other horizontal surface unless otherwise specified.

c. On stair flights: 42 vertical inches from the top of rail to a line connecting the toes of the treads.

3. Lower rails:

a. Single, unspliced length between posts.

b. At level runs and at stairs: approximately half the height of the top rail.

F. Completed railing structure and anchorage: capable of withstanding the loads prescribed by the Building Code at Project location.

G. Mount railing posts into flanged cast or extruded aluminum sleeve brackets, and secure with stainless steel set screws.

2.03 ALUMINUM GRATINGS AND FRAMES

A. Manufacturers: IKG Industries, Klemp Corporation, Ohio Gratings, Inc., or equal.

1. Grating: I-bar swage locked with 1/4 inch flanged bars at 1-3/16 inches on center and cross bars at 4 inches on center per NAAMM AMP 500, NAAMM MBG 531, and NAAMM MBG 533.

2. Supporting members: aluminum of the size and shape per Drawings.

3. Grating: alloy 6063-T6 bearing bars and alloy 6063-T5 cross bars with mill finish.

4. Straps, bolts, ties, and accessories: aluminum.

5. Band grating with 1/4 inch thick band of width equal to the full depth of grating, welded on at the ends of all sections and at openings.

6. Where not shown, provide suitable supporting members as required when span of grating changes direction.

B. Coat portions of aluminum to be in contact with concrete with heavy bodied bituminous paint.

C. Limit grating sections to a size that can be removed by one man.

2.04 EXPANSION BOLTS

A. Furnish in accordance with Section 03 30 53.

1. Apply bituminous coating to areas to be embedded in concrete.

2.05 SOURCE OF QUALITY CONTROL

A. Provide in accordance with Division 01 General Requirements.

PART 3 – EXECUTION

3.01 DISSIMILAR MATERIAL

A. Keep aluminum surfaces from direct contact with metals other than stainless steel by painting the dissimilar metal with a coating of zinc chromate paint, or provide non-absorptive tape between dissimilar metals.

B. Paint aluminum with a coat of bituminous paint where aluminum is embedded in, or comes in contact with, concrete.

3.02 INSTALLATION

A. Use stainless steel hardware when anchoring aluminum and in submerged locations.

3.03 CLEANING

A. Immediately after installation, round or chamfer sharp edges and grind burrs, jagged edges and surface defects smooth.

3.04 FIELD QUALITY CONTROL

A. Provide in accordance with Division 01 General Requirements.

3.05 CLOSEOUT ACTIVITIES

A. Provide in accordance with Division 01 General Requirements.

END OF SECTION

SECTION 09 90 00

PAINTING AND COATING

1.01 SUMMARY

A. Section Includes

1. Provide surface preparation and painting in accordance with this Section and applicable reference standards listed in Article 1.03.

2. Provide the following types of painting Work per the Paint Schedules attached and on Drawings.

   a. Painting and labeling of new ductile iron pipes and fittings

   b. Touch-up painting of factory-coated equipment

   c. Painting of existing interior masonry walls

   d. Painting of new and existing interior conduit and miscellaneous metals

   e. Painting of existing steel door and frame

1.02 PRICE AND PAYMENT PROCEDURES

A. Measurement and payment requirements: per Division 01 General Requirements.

1.03 REFERENCES

A. Reference Standards

1. Steel Structures Painting Council (SSPC)

1.04 ADMINISTRATIVE REQUIREMENTS

A. Coordination, Sequencing, and Scheduling: per Division 01 General Requirements.

1.05 SUBMITTALS

A. Submit in accordance with Division 01 General Requirements.

B. Product Data

1. Block Fillers

2. Primers

3. Manufacturer's technical information including label analysis and instructions for handling, storage, and application of each material proposed for use.

4. Manufacturer's material data and certificates of performance for proposed substitutions.

5. List each material and cross-reference the specific coating, finish system, and application. Identify each material by the manufacturer's catalog number and general classification.

C. Samples and Mockups: as specified in Article 1.06.

1. Provide samples for initial color selection in the form of manufacturer's color charts. After color selection, furnish color chips of selections made for surfaces to be coated.

D. Certificates: from manufacturer that products supplied comply with local regulations controlling use of volatile organic compounds (VOCs).

E. Closeout and Maintenance Material Submittals: per Division 01 General Requirements.

1.06 QUALITY ASSURANCE

A. Provide in accordance with Division 01 General Requirements.

B. Applicator Qualifications: Engage experienced applicators who have completed painting system applications similar in material and extent to those indicated for the Project that have resulted in a construction record of successful in-service performance.

C. Field Samples: On wall surfaces and other exterior and interior components, duplicate finishes of prepared samples. Provide full-coat finish samples on at least 100 square ft. of surface until required sheen, color, and texture are obtained; simulate finished lighting conditions for review of in-place Work.

1. Final acceptance of colors will be from Project-applied samples.

2. The Engineer will select one room or surface to represent surfaces and conditions for each type of coating and substrate to be painted. Apply coatings in this room or surface according to the Paint Schedules attached and on the Drawings or as specified.

1.07 DELIVERY, STORAGE, AND HANDLING

A. Provide in accordance with Division 01 General Requirements.

B. Deliver materials to the Site in the manufacturer's original, unopened packages and containers bearing manufacturer's name and label, and the following information:

1. Product name or title of material

2. Product description (generic classification or binder type)

3. Manufacturer's stock number and date of manufacture

4. Contents by volume, for pigment and vehicle constituents

5. Thinning instructions

6. Application instructions

7. Color name and number

C. Store materials not in use in tightly covered containers in a well-ventilated area at a minimum ambient temperature of 45 degrees F. Maintain containers used in storage in a clean condition, free of foreign materials and residue.

1. Protect from freezing. Keep storage area neat and orderly. Remove oily rags and waste daily. Take necessary measures to ensure that workers and Work areas are protected from fire and health hazards resulting from handling, mixing, and application.

1.08 SITE CONDITIONS

A. Existing Conditions: per Division 01 General Requirements.

1.09 MAINTENANCE

A. Extra Materials: Furnish as specified below of same material and workmanship as original.

1. Paint: one gallon of each color and type.

PART 2 – PRODUCTS

2.01 MANUFACTURERS

A. Tnemec, Sherwin Williams (S-W), or Devoe per Paint Schedules attached and on the Drawings or Engineer Approved Equal.

2.02 PAINT MATERIALS

A. Provide materials designated by item or area to be painted in Paint Schedules attached and on Drawings. Use of manufacturer's proprietary product names to designate colors or materials is not intended to imply that products named are required to be used to the exclusion of equivalent products of other manufacturers.

B. Provide primers and undercoat paint produced by the same manufacturer as the finish coats.

C. Material Compatibility: Provide block fillers, primers, finish coat materials, and related materials that are compatible with one another and the substrates indicated under conditions of service and application, as demonstrated by the manufacturer based on testing and field experience.

D. Material Quality: manufacturer's best-quality trade sale paint material of the various coating types specified. Ensure paint material containers display manufacturer's product identification.

E. Colors: from the manufacturer's full range of standard colors.

2.03 SOURCE QUALITY CONTROL

A. Provide in accordance with Division 01 General Requirements.

PART 3 – EXECUTION

3.01 EXAMINATION

A. Examine substrates and conditions under which painting will be performed for compliance with paint application requirements. Ensure surfaces receiving paint are thoroughly dry before paint is applied. Do not begin to apply paint until unsatisfactory conditions have been corrected.

B. Coordination of Work: Review other Specifications in which primers are provided to ensure compatibility of the total system for various substrates. On request, furnish information on characteristics of finish materials to ensure use of compatible primers. Notify the Engineer about anticipated problems using the materials specified over substrates primed by others.

3.02 PREPARATION

A. Remove hardware and hardware accessories, plates, machined surfaces, lighting fixtures, and similar items already installed that are not to be painted, or provide surface-applied protection prior to surface preparation and painting. Following completion of painting operations in each space or area, ensure workers skilled in the trades involved reinstall items.

B. Before applying paint or other surface treatments, clean the substrates of substances that could impair the bond of the various coatings. Remove oil and grease prior to cleaning. Schedule cleaning and painting so dust and other contaminants from the cleaning process will not fall on wet, newly painted surfaces.

C. Clean and prepare surfaces to be painted according to the manufacturer's instructions for each particular substrate condition and as specified.

1. Provide barrier coats over incompatible primers or remove and reprime. Notify Engineer in writing about anticipated problems using the specified finish-coat material with substrates primed by others.

2. Ensure existing painted surfaces are structurally sound, dry, clean, and free of oil, grease, dirt, mildew, form release agents, curing compounds, efflorescence, loose and flaking paint, or other foreign material. Engineer will approve condition of prepared substrate prior to application of coating system. Test old coatings for lifting per coating manufacturer's recommendations.

3. Cementitious Materials: Prepare concrete, concrete masonry block, cement plaster, and mineral-fiber-reinforced cement panel surfaces to be painted. Remove efflorescence, chalk, dust, dirt, grease, oils, and release agents. Roughen, as required, to remove glaze. If hardeners or sealers have been used to improve curing, use mechanical methods of surface preparation.

   a. Use abrasive blast-cleaning methods if recommended by the paint manufacturer.

   b. Determine alkalinity and moisture content of surfaces by performing appropriate tests. If surfaces are sufficiently alkaline to cause the finish paint to blister and burn, correct this condition before application. Do not paint surfaces where moisture content exceeds that permitted in manufacturer's printed directions.

4. Ferrous Metals: Clean ungalvanized ferrous metal surfaces that have not been shop-coated; remove oil, grease, dirt, loose mill scale, and other foreign substances. Use solvent or mechanical cleaning methods that comply with recommendations of the Steel Structures Painting Council (SSPC).

5. Galvanized Surfaces: Clean galvanized surfaces with nonpetroleum-based solvents so that the surface is free of oil and surface contaminants. Remove pretreatment from galvanized sheet metal fabricated from coil stock by mechanical methods.

D. Carefully mix and prepare paint materials according to manufacturer's directions.

1. Maintain containers used in mixing and applying paint in a clean condition, free of foreign materials and residue.

2. Stir material before application to produce a mixture of uniform density; stir as required during application. Do not stir surface film into material. Remove film and, if necessary, strain material before using.

3. Use only thinners approved by the paint manufacturer and only within recommended limits.

3.03 COLOR SELECTION

A. Colors of finish coats: as indicated or specified or as selected by Owner.

3.04 APPLICATION

A. General

1. Apply water-based paints only when the temperature of surfaces to be painted and surrounding air temperatures are between 50 degrees F and 90 degrees F.

2. Apply solvent-thinned paints only when the temperature of surfaces to be painted and surrounding air temperatures are between 45 degrees F and 95 degrees F.

3. Do not apply paint in snow, rain, fog, or mist; or when the relative humidity exceeds 85 percent; or to damp or wet surfaces. Painting may continue during inclement weather if surfaces and areas to be painted are enclosed and heated within temperature limits specified by the manufacturer during application and drying periods.

4. Apply paint according to manufacturer's directions. Use applicators and techniques best suited for substrate and type of material being applied.

a. Do not paint over dirt, rust, scale, grease, moisture, scuffed surfaces, or conditions detrimental to formation of a durable paint film.

b. Paint colors, surface treatments, and finishes: indicated in the Paint Schedules.

c. Provide finish coats that are compatible with primers used.

d. The number of coats and the film thickness required are the same regardless of the application method. Do not apply succeeding coats until the previous coat has cured as recommended by the manufacturer. Sand between applications where sanding is required to produce a smooth even surface according to the manufacturer's directions.

e. Apply additional coats if undercoats, stains, or other conditions show through final coat of paint until paint film is of uniform finish, color, and appearance. Give special attention to ensure that surfaces, including edges, corners, crevices, welds, and exposed surfaces/fasteners, receive a dry film thickness equivalent to that of flat surfaces.

f. The term "exposed surfaces" includes areas visible when permanent or built-in fixtures, convector covers, covers for finned tube radiation, grilles, and similar components are in place. Extend coatings in these areas, as required, to maintain the system integrity and provide desired protection.

g. Paint surfaces behind movable equipment and furniture the same as similar exposed surfaces. Before the final installation of equipment, paint surfaces behind permanently fixed equipment or furniture with prime coat only.

h. Paint interior surfaces of ducts, where visible through registers or grilles, with a flat, non-specular black paint.

i. Paint back sides of access panels and removable or hinged covers to match exposed surfaces.

j. Finish exterior doors on tops, bottoms, and side edges same as exterior faces.

k. Sand lightly between each succeeding enamel or varnish coat.

l. Omit primer on metal surfaces that have been shop-primed and touch-up painted.

m. Prime CMU walls and apply 1 finish coat prior to installation of any wall mounted equipment, piping, conduits, or fixed objects that would limit access for application of coating system and/or conceal portions of the wall surface. Apply second finish coat after all Work of other trades is completed.

B. Apply first coat to surfaces that have been cleaned, pretreated, or otherwise prepared for painting as soon as practicable after preparation and before subsequent surface deterioration.

1. Allow sufficient time between successive coats to permit proper drying. Do not recoat until paint has dried to where it feels firm, does not deform or feel sticky under moderate thumb pressure, and where application of another coat of paint does not cause the undercoat to lift or lose adhesion.

C. Apply paints and coatings by brush, roller, spray, or other applicators according to the manufacturer's directions.

1. Brushes: Use brushes best suited for the material applied.

2. Rollers: Use rollers of carpet, velvet back, or high-pile sheep's wool as recommended by the manufacturer for the material and texture required.

3. Spray Equipment: Use airless spray equipment with orifice size as recommended by the manufacturer for the material and texture required.

D. Apply materials no thinner than the manufacturer's recommended spreading rate. Provide the total dry film thickness of the entire system as recommended by the manufacturer.

E. Paint only mechanical and electrical Work exposed in mechanical equipment rooms and in occupied spaces and paint mechanical, electrical, HVAC, process equipment, and other utility items as indicated on the Drawings. Do not paint items that are factory painted. Factory applied coating systems are specified in the Specification where the product or item is specified. Items to be painted include:

1. Piping
2. Pumps
3. Heat exchangers
4. Tanks
5. HVAC ductwork
6. Insulation
7. Supports
8. Motors and mechanical equipment
9. Accessory items

F. Ferrous metals indicated on the Drawings to be painted will be provided with a shop primer compatible with the coatings specified herein. Paint ferrous metals specified in Section 05 50 00 that are not galvanized and indicated to be painted on the Drawings.

G. Block Fillers: Apply block fillers to concrete masonry block at a rate to ensure complete coverage with pores filled.

3.05 PRIME COATS

A. Before applying finish coats, apply a prime coat of material as recommended by the manufacturer, to material that is required to be painted or finished and that has not been prime-coated by others. Recoat primed and sealed surfaces where evidence of suction spots or unsealed areas in first coat appears, to ensure a finish coat with no burn-through or other defects due to insufficient sealing. Apply prime coat to previously painted surfaces if finish coats are not compatible with existing coating.

3.06 PIGMENTED (OPAQUE) FINISHES

A. Completely cover to provide a smooth, opaque surface of uniform finish, color, appearance, and coverage. Cloudiness, spotting, holidays, laps, brush marks, runs, sags, ropiness, or other surface imperfections will not be acceptable.

3.07 PIPE, VALVE/EQUIPMENT IDENTIFICATION AND COLOR CODING

A. Provide identification of pipes, valves and pumps by color as specified in 40 05 13.01 Process Pipe and Fittings.

3.08 COMPLETED WORK

A. Match approved samples for color, texture, and coverage. Remove, refinish, or repaint Work not complying with specified requirements.

3.09 FIELD QUALITY CONTROL

A. Provide in accordance with Division 01 General Requirements.

B. Site/Field Tests and Inspections: may be required by Owner up to four times during the period when paint is being applied.

1. Engage the services of an independent testing agency with minimum 5 years of experience to sample the paint material used. Provide that samples of material delivered to the Project are taken, identified, sealed, and certified in the presence of the Contractor.

2. The independent testing agency shall perform appropriate tests at no additional cost to the Owner for the following characteristics.

    a. Quantitative materials analysis
    b. Abrasion resistance
    c. Apparent reflectivity
    d. Flexibility
    e. Washability
    f. Absorption
    g. Accelerated weathering

h. Dry opacity
i. Accelerated yellowness
j. Recoating
k. Skinning
l. Color retention
m. Alkali and mildew resistance

3. If test results show material being used does not comply with specified requirements, stop painting, remove noncomplying paint, repaint surfaces coated with rejected paint, and remove rejected paint from previously painted surfaces if, upon repainting with specified paint, the two coatings are incompatible.

3.10 CLEANING

A. At the end of each Work day, remove empty cans, rags, rubbish, and other discarded paint materials from the Site. Clean up debris resulting from Work and dispose in Project on-Site trash receptacles.

B. After completing painting, clean glass and paint-spattered surfaces. Remove spattered paint by washing and scraping. Be careful not to scratch or damage adjacent finished surfaces.

3.11 PROTECTION

A. Protect Work of other trades, whether being painted or not, against damage by painting. Correct damage by cleaning, repairing or replacing, and repainting, as acceptable to Engineer.

B. Provide "Wet Paint" signs to protect newly painted finishes. Remove temporary protective wrappings provided by others to protect their Work after completing painting operations.

C. At completion of construction activities of other trades, touch up and restore damaged or defaced painted surfaces.

3.12 ATTACHMENTS

A. Paint Schedule

END OF SECTION

PAINT SCHEDULE

Number of coats scheduled is as a minimum. Painting and finishing shall conform to applicable Laws and building code regarding fire hazard classifications and volatile organic content of finish materials. Provide products by the manufacturers named or approved equal.

Refer to "Room Finish Schedule" on the Drawings for building areas to be painted.

Provide paint and coating systems listed below where the Drawings refer to this Specification section or reference any item to be painted or coated, unless a specific paint or coating system is specified elsewhere.

This list is intended to cover all potential conditions that may require painting and not all paint and coating systems listed below may not be included in the Work.

Interior Galvanized Steel (where listed on Drawings to be field painted) for Epoxy Coating

Galvanizing Repair at Field Welds	1. Tnemec "Series 90-97 Tneme-Zinc" 2. S-W "Zinc-Clad 2 Plus" 3. Devoe "Cathacoat 302H"
Field Applied Prime Coat	1. Tnemec "Series N69 Hi-Build Epoxoline" DFT 2-3 mils 2. S-W "Macropoxy 646" DFT 5-10 mils 3. Devoe "Devran 203" DFT 2-4 mils
Field Applied Finish Coat	1. Tnemec "Series N69 Hi-Build Epoxoline" DFT 2-3 mils 2. S-W "Macropoxy 646" DFT 5-10 mils 3. Devoe "Bar-Rust 235H" DFT 4-7 mils

Exterior Galvanized Steel (where listed on Drawings to be field painted) for Epoxy / Polyurethane Coating

Galvanizing Repair at Field Welds	1. Tnemec "Series 90-97 Tneme-zinc" 2. S-W "Zinc-Clad 2 Plus" 3. Devoe "Cathacoat 302H"
Field Applied Prime Coat	1. Tnemec "Series 27 Typoxy" DFT 2-3 mils 2. S-W "Macropoxy 646" DFT 5-10 mils 3. Devoe "Devran 203" DFT 3-4 mils
Field Applied Two Finish Coats	1. Tnemec "Series 175 Endura-Shield" DFT 2-5 mils/ct 2. S-W "High-Solids Polyurethane 100" DFT 3-4 mils/ct 3. Devoe "Devthane 379H" DFT 3-5 mils/ct

Factory/Shop Primed Steel Per Paragraph 3.10.16, Previously Painted surfaces Interior Exposure for Epoxy Coating

Shop Applied Prime Coat	1. Manufacturer's Standard Primer
Field Applied Two Finish Coat	1. Tnemec "Series N69 Hi-Build Epoxoline" DFT 2-3 mils 2. S-W "Macropoxy 646" DFT 5-10 mils 3. Devoe "Bar-Rust 235H" DFT 4-7 mils

Factory/Shop Primed Steel Per Paragraph 3.10.16, Previously Painted Surfaces- Exterior Exposure for Epoxy / Polyurethane Coating

Shop Applied Prime Coat	1. Manufacturer's Standard Primer
Field Applied Intermediate Coat	1. Tnemec "Series N69 Hi-Build Epoxoline" DFT 2-3 mils 2. S-W "Macropoxy 646" DFT 5-10 mils 3. Devoe "Bar-Rust 235H" DFT 4-7 mils
Field Applied Two Finish Coats	1. Tnemec "Series 175 Endura-Shield" DFT 2-5 mils/coat 2. S-W "High Solids Polyurethane 100" DFT 3-4 mils/coat 3. Devoe "Devthane 379H" DFT 2-3 mils/coat

Ferrous metals listed in Section 05 50 00 Metal Fabrications Interior Exposure for Epoxy Coating

Shop Applied Prime Coat	1. Tnemec "Series 27 Typoxy" DFT 2-3 mils 2. S-W "Recoatable Epoxy Primer" DFT 4-6 mils 3. Devoe "Devran 223" 4-6 mils
Field Applied Two Finish Coats	1. Tnemec "Series N69 Hi-Build Epoxoline" DFT 2-3 mils 2. S-W "Macropoxy 646" DFT 5-10 mils 3. Devoe "Bar-Rust 235H" DFT 4-7 mils

Ferrous metals listed in Section 05 50 00 Metals Fabrication Exterior Exposure for Epoxy Coating

Shop Applied Prime Coat	1. Tnemec "Series N69 Hi-Build Epoxoline" DFT 2-3 mils 2. S-W "Macropoxy 646" DFT 5-10 mils 3. Devoe "Bar-Rust 235H" DFT 4-7 mils
Field Applied Two Finish Coats	1. Tnemec "Series 175 Endura-Shield" DFT 2-5 mils/ct 2. S-W "High Solids Polyurethane 100" DFT 3-4 mils/ct 3. Devoe "Devthane 379H" DFT 2-3 mils/ct

Ductile, Cast Iron, Copper, Aluminum or PVC - Interior or Exterior Exposure for Epoxy/Polyurethane Coating

PVC Surface Preparation	Scarify
Field Applied Prime Coat	1. Tnemec "Series N69 Hi-Build Epoxoline" DFT 2-3 mils 2. S-W "Macropoxy 646" DFT 5-10 mils 3. Devoe "Devran 224HS" DFT 4-8 mils
Field Applied Intermediate Coat	1. Tnemec "Series N69 Hi-Build Epoxoline" DFT 4-6 mils 2. S-W "Macropoxy 646" DFT 5-10 mils 3. Devoe "Devran 224HS" DFT 4-8 mils
Field Applied Finish Coat	1. Tnemec Series 175 Endura-Shield" @ DFT 2.0-5.0 mils 2. S-W "High Solids Polyurethane 100" @ 3.0-4.0 mils 3. Devoe "Devthane 379H" DFT 2-3 mils

Insulated Pipe Interior or Exterior Exposure for Acrylic

Field Applied	1. Tnemec "Series 151-1051 Elasto- Grip Primer" @ DFT 1.0-1.5 mils 2. S-W "DTM Acrylic/Primer" @ DFT 2.5-4.0 mils 3. Devoe "Devflex 4020PF" @ DFT 2.2-3.5 mils
Field Applied Two Finish Coat	1. Tnemec "Series 1029 Enduratone" @ DFT 2.0-3.0 mils/ct 2. S-W "Sher-Cryl HPA" @ DFT 2.5-4.0 mils/ct 3. Devoe "Devflex 4216HP" @ DFT 1.5-4.0 mils/ct

Interior Gypsum Drywall for Waterborne Epoxy

Field Applied Prime Coat	1. Tnemec "Series 151-1051 Elasto-Grip FC" @ DFT 1.0-2.0 mils 2. S-W "PrepRite ProBlock" @ DFT 1.0-2.0 mils 3. Devoe "Gripper 3210" @ DFT 2.0-3.0 mils/ct
Field Applied Two Finish Coats	1. Tnemec "Series 113 Tufcoat" @ DFT 2-3 mils/ct 2. S-W "Waterbased Catalyzed Epoxy" @ DFT 2.5-3.0 mils/ct 3. Devoe "Tru-Glaze-WB 4406" @ DFT 2.0-5.0 mils/ct

Interior Wood for Waterborne Epoxy

Field Applied Prime Coat	1. Tnemec "Series 151-1051 Elasto-Grip FC" @ DFT 1.0-2.0 mils 2. S-W "PrepRite ProBlock" @ DFT 1.0-2.0 mils 3. Devoe Devflex 4020PF" @ DFT 2.2-3.5 mils
Field Applied Two Finish Coats	1. Tnemec "Series 113 Tufcoat"@ DFT 2.0.-3.0 mils/ct 2. S-W "Watebased Catalyzed Epoxy" @ DFT 2.5-3.0 mils/ct 3. Devoe "Tru-Glaze-WB 4406" @ DFT 2.0-5.0 mils/ct

Interior CMU walls for Waterborne Epoxy

Field Applied Prime Coat	1. Tnemec "Series 130 Envirofill" 60-80 sf/gal 2. S-W "Kem Cati-Coat HS Epoxy Filler/ Sealer" @ DFT 10-18 mils 3. Devoe "Tru-Glaze-WB 4015" @ DFT 10-15 mils
Field Applied Two Finish Coats	1. Tnemec "Series 113 Tufcoat" @ DFT 4-6 mils/ct 2. S-W "Waterbased Catalyzed Epoxy" @ DFT 2.5-3 mils/ct 3. Devoe "Tru-Glaze-WB 4406" @ DFT 2-5 mils/ct

Interior Concrete Ceilings and Walls for Waterborne Epoxy

Field Applied	1. Tnemec "Series 114 Tufcoat" @ DFT 4-6 mils 2. S-W "Waterbased Tile-Clad Epoxy @ DFT 2-4 mils 3. Devoe "Tru-Glaze-WB 4408" @ DFT 10-1 mils
Field Applied Two Finish Coats	1. Tnemec "Series 114 Tufcoat" @ DFT 4-6 mils/ct 2. S-W "Waterbased Tile-Clad Epoxy" @ DFT 2-4 mils/ct 3. Devoe "Tru-Glaze-WB 4408" @ DFT 2-5 mils/ct

Interior and Exterior Wood Trim, Fiber-Cement/Composite Trim for Acrylic Coating, semi-gloss

Field Applied Prime Coat	1. Tnemec "Series 10-99W" DFT 2-3 mils 2. S-W "Exterior Latex Wood Primer"DFT 2-3 mils 3. Glidden "Stain Stomper 2110" DFT 2-3 mils
Field Applied Two Finish Coats	1. Tnemec "Tneme-Cryl Series 6"DFT 2-3 mils/ct 2. S-W "A-100 Exterior Acrylic Latex" DFT 1.5-2 mils/ct 3. Glidden "Fortis 350" DFT 1.5-2 mils/ct

This page intentionally left blank

SECTION 26 05 00

COMMON WORK RESULTS FOR ELECTRICAL (FILED SUB-BID REQUIRED)

PART 1 – GENERAL

1.01 SCOPE

A. Examine all Drawings and Specifications for requirements that affect the Work of this Section.

B. Coordinate the Work of this Section(s) with related Work of other trades and cooperate with such trades to assure the steady progress of the Work under the Contract Documents.

C. The term "Contractor" in this Section(s) and all referenced Drawings and Specifications shall mean the ELECTRICAL Subcontractor except where "General Contractor" is specified.

D. The work included under this section shall include all electrical work associated with the Residuals Handling Facilities Upgrade Project in Lowell, MA in accordance with the Drawings and as specified herein.

E. The Electrical Subcontractor shall provide the labor, tools, equipment, and materials necessary to furnish and install all electrical work in accordance with the Drawings and as specified herein.

F. In general, electrical Work shall include but not be limited to the following:

1. All motor wiring, safety disconnects, and motor starters unless integral with equipment.

2. Power distribution equipment.

3. Power outlets and equipment connections.

4. Wiring Devices.

5. Motor Controls not provided by other divisions.

6. Control wiring not provided by other divisions.

7. Complete grounding system.

8. Service Feeders to Building.

9. Raceways.

10. All support material and hardware for raceway and electrical equipment.

11. Branch circuit wiring.

12. Underground electrical systems. All excavation, backfill, surface restoration, and concrete and rebar work shall be provided by the General Contractor. Manholes, Handholes, conduit, and conduit spacers/supports shall be provided by the Electrical Subcontractor. Manholes and handholes shall be installed by the General Contractor.

13. Work shall include installation and termination of all control and signal wiring for instrumentation and process control equipment as indicated in the Contract Documents. Work shall include installation and mounting of new control panel hardware furnished under Division 40 in accordance with the Drawings.

14. Building wall, floor and roof penetrations for raceways.

15. Start up, acceptance testing test reports and instruction of systems operation to the Owner.

16. Mounting and connection of panels and instruments furnished by Division 40.

1.02 REQUIREMENTS OF REGULATORY AGENCIES

A. Codes and Standards:

1. Electrical equipment, materials, installation and workmanship shall comply with all state and local building codes, safety and fire law regulations at the location of the Work and shall conform to the latest edition of the applicable codes and standards of the organizations listed:

   a. National Electrical Code (NEC).

   b. Massachusetts Electrical Code (MEC).

   c. Underwriters' Laboratories (UL).

   d. Institute of Electrical and Electronics Engineers (IEEE C2).

   e. American National Standards Institute, Inc. (ANSI).

   f. National Fire Protection Association (NFPA).

   g. National Electrical Manufacturers Association (NEMA).

   h. Insulated Power Cable Engineers Association (IPCEA).

   i. Association of Edison Illuminating Companies (AEIC).

   j. Occupational Safety Health Act (OSHA).

k. Americans with Disabilities Act (ADA).

2. Where the Contract requires the Work or any part of the same, to be above the standards required by applicable laws, ordinances, rules and regulations and other statutory provisions pertaining to the Work, such Work shall be performed and completed in accordance with the Contract requirements.

3. Should any changes in the specifications and Drawings be necessary to conform to the requirements of any of the above mentioned codes or standards, the Contractor shall so notify the Engineer.

B. Drawings required by governing authorities: Prepare any detailed diagrams or Drawings which may be required by the governing authorities.

C. Permits, Certificates, Inspections, Fees and Utility Costs:

1. The Contractor shall obtain and make payments for all permits, licenses, and certificates which are required for the associated Work.

2. Following completion of the Work, the Contractor shall obtain certificates of approval from the responsible agencies concerned with the Work.

3. Arrange for timely inspections required for Work under this section.

1.03 COORDINATION OF WORK

A. The electrical work shall be coordinated with the work of other trades to prevent interferences and so that the progress in construction of the building will in no way be retarded.

B. Refer to other sections of these specifications and Drawings for related work which may affect the work of this section.

C. Where lighting fixtures and other electrical items are shown in conflict with locations of structural members and mechanical or other equipment, furnish and install all required supports and wiring to clear the encroachment for a complete installation.

D. Any Work installed contrary to or without acceptance by the Engineer shall be subject to change as directed by the Engineer, and no extra compensation will be allowed to the Contractor for making these changes.

1.04 DRAWINGS

A. All electrical equipment such as junction and pull boxes, panelboards, switches, controls and such other apparatus as may require maintenance and operation from time to time shall be made easily accessible and properly labeled.

B. The Contractor shall examine all contracts and reference Drawings, and verify and properly coordinate the placement of outlets. Contractor shall also check all Drawings including mechanical Drawings and shop drawings for apparatus for which he must rough-in and to which he must connect.

1.05 SUBMITTALS

A. Furnish manufacturer's product data, test reports, and materials certifications as required.

B. Follow the procedures specified in the General Requirements and in addition, the Contractor shall prepare and submit a complete submittal list to the Engineer. The submittal list shall include all submittal items covered in the Division 26 specification sections.

C. Shop Drawings shall be submitted to the General Contractor who shall review and approve them prior to submittal to the Engineer for approval. Shop Drawings shall identify the specific equipment and material being supplied; the quantity being supplied; and all accessories, dimensions, descriptions, mounting and connection details, wiring diagrams, elementary control diagrams, equipment interface diagrams and any other information necessary to determine compliance with the plans and specifications. Fabrication and installation shall be in accordance with the approved Shop Drawings.

D. As-built copies of all Shop Drawings shall be submitted to the Engineer.

E. Permits and Easements. Submit copies of reports, permits, and easements necessary for installation, use, and operation.

F. Test Reports. Submit copies of reports of tests, inspections, and meter readings as specified.

1.06 RECORD DRAWINGS

A. The Contractor shall maintain a complete and separate set of prints of Contract Drawings and specifications at job Site for duration of the contract. The Contractor shall record Work completed and all changes from original Contract. Drawings shall clearly and accurately include Work installed as a modification or as an addition to the original design.

B. At completion of Work and prior to final request for payment, the Contractor shall submit a complete set of reproducible Record Drawings showing all systems as actually installed.

1.07 JOB CONDITIONS

A. Existing Conditions:

1. Existing Utilities: Locate existing underground utilities in excavation areas. If utilities are indicated to remain, support and protect services during excavation operations.

2. Prior to all Work of this section, carefully inspect the installed Work of all other trades and verify that all such Work is complete to the point where this installation may properly commence.

3. Verify that the electrical installation may be made in complete accordance with all pertinent codes and regulations and the original design.

B. Coordination:

1. Coordinate the installation of electrical items with the schedules for Work of other trades to prevent unnecessary delays in the total Work.

2. Coordinate with all local utility companies and make all installations for their services in accordance with all utility company requirements.

3. Any changes shall be done at the Contractor expense.

4. Where lighting fixtures and other electrical items are shown in conflict with locations of structural members and mechanical or other equipment, furnish and install all required supports and wiring to clear the encroachment for a complete installation.

5. Any Work installed contrary to or without acceptance by the Engineer shall be subject to change as directed by the Engineer, and no extra compensation will be allowed to the Contractor for making these changes.

C. Accuracy of Data:

1. The Drawings are diagrammatic and functional only, and are not intended to show exact circuit layouts, number of fittings, components and place in satisfactory operational power, lighting, and other electrical systems shown. Install additional circuits, components and material wherever needed to conform to the specific requirements of the equipment whether or not indicated or specified.

2. Information and components called for in the specification but not shown on plans or vice versa shall apply and shall be provided as though required expressly by both.

3. The locations of equipment, fixtures, outlets and similar devices shown on the Drawings are approximate only. Field measurements shall take precedence over scaled dimensions from Drawings. Exact locations shall be as accepted by Engineer during construction. Obtain in the field all information relevant to the placing of electrical Work and, in case of any

interference with other Work, proceed as directed by the Engineer and furnish all labor and materials necessary to complete the Work in an acceptable manner.

4. In case of difference between building codes, specifications, state laws, industry standards and the Contract Documents, the most stringent shall govern. Should the Contractor perform any Work that does not comply with the requirements of the applicable building codes, state laws, and industry standards, he shall bear all cost arising in correcting these deficiencies.

5. Verify size and ratings of motors and other electrically operated devices supplied by others.

6. Check with Engineer before installation of Work for outlets not specified as to location or for Work that interferes with other trades.

1.08 FLASHING, CUTTING, FIREPROOFING AND WATERPROOFING

A. Flashing around all electrical items penetrating roof or exterior walls shall be the responsibility of the General Contractor.

B. All cutting of surfaces, including core drilling of walls and slabs, shall be done by the Electrical Contractor.

C. Patching shall be done by the General Contractor.

D. The General Contractor shall fireproof, waterproof and seal all openings in slabs and walls.

1.09 PRODUCT DELIVERY, STORAGE, AND HANDLING

A. Protection. Use all means necessary to protect electrical system materials before, during and after installation and to protect the installed Work and materials of all other trades.

B. Replacements. In the event of damage, immediately make all repairs and replacements necessary to the acceptance of the Engineer and at no additional cost to the Owner. If any apparatus has been subject to possible injury by water, it shall be thoroughly dried out and put through such special tests as directed by the Engineer, at the cost and expense of the Contractor, or shall be replaced by the Contractor at his own expense.

C. Protect the Work of other trades. Restore any damage caused to other trades to the condition existing prior to damage at no additional cost to the Owner.

D. Investigate each space in the building through which equipment must pass to reach its final location. If necessary, the manufacture shall be required to ship his

material in sections sized to permit passing through such restricted areas in the building.

1.10 WORK PERFORMANCE

A. Electrical work shall be accomplished with all affected circuits or equipment de-energized. When an electrical outage cannot be accomplished in this manner for the required work, the following requirements are mandatory:

1. Electricians must use full protective equipment (i.e., certified and tested insulating material to cover exposed energized electrical components, certified and tested insulated tools, etc.) while working on energized systems in accordance with NFPA 70E.

2. Electricians must wear personal protective equipment while working on energized systems in accordance with NFPA 70E.

3. Before initiating any work, a job specific work plan must be developed by the Contractor and the Owner. The work plan must include procedures to be used on and near the live electrical equipment, barriers to be installed, safety equipment to be used and exit pathways.

4. Work on energized circuits or equipment cannot begin until prior written approval is obtained from the Owner.

1.11 SPECIAL WARRANTY

A. Compile and assemble the warranties specified in Division 26 into a separate set of vinyl covered three ring binders, tabulated and indexed for easy reference.

B. Provide complete warranty information for each item. Information to include:

1. Product or equipment list.

2. Date of beginning of warranty or bond.

3. Duration of warranty or bond.

4. Names, addresses, and telephone numbers and procedures for filing a claim and obtaining warranty services.

1.12 DEFINITIONS

A. As used in this specification, "provide" means "furnish and install", "furnish" means "to purchase and deliver to the project Site complete with every necessary appurtenance and support and to store in a secure area in accordance with manufacturers instructions", and "install" means "to unload at the delivery point at the Site or retrieve from storage, move to point of installation and perform

every operation necessary to establish secure mounting and correct operation at the proper location in the Project".

B. Finished Areas. In general, areas with carpet or tile floors, lay-in or fixed ceiling tile, special architectural ceiling treatment, or tiled, plastered, or paneled walls shall be considered finished areas.

C. Interior. For the purposes of this specification, interior is any area within the boundaries of the foundation of any building within the superstructure or other structures not classified as a building.

1.13 TEMPORARY POWER

A. The Contractor shall furnish, install, maintain, and remove the temporary electrical power and lighting systems, including lamps, and pay for all labor, materials, and equipment required therefore. All such temporary electrical Work shall meet the requirements of the National Electrical Code, the local utility company, and OSHA.

B. The Contractor shall make all necessary arrangements with the local utility company as to where the temporary electric service can be obtained.

C. The Contractor shall secure and pay for all required permits and back charges for Work performed by others, and other expenses incidental to the installation of the temporary electric service.

1.14 POSTED OPERATING INSTRUCTIONS

A. Provide for each system and principal item of equipment as specified in the technical sections for use by operation and maintenance personnel. The operating instructions shall include the following:

1. Wiring diagrams, control diagrams, and control sequence for each principal system and item of equipment.

2. Start up, proper adjustment, operating, lubrication, and shutdown procedures.

3. Safety precautions.

4. The procedure in the event of equipment failure.

5. Other items of instruction as recommended by the manufacturer of each system or item of equipment.

B. Print or engrave operating instructions and frame under glass or in approved laminated plastic. Post instructions where directed. For operating instructions exposed to the weather, provide weather-resistant materials or weatherproof

enclosures. Operating instructions shall not fade when exposed to sunlight and shall be secured to prevent easy removal or peeling.

1.15 MANUFACTURER'S NAMEPLATE

A. Each item of equipment shall have a nameplate bearing the manufacturer's name, address, model number, and serial number securely affixed in a conspicuous place; the nameplate of the distributing agent will not be acceptable.

1.16 FIELD FABRICATED NAMEPLATES

A. Provide laminated plastic nameplates for each equipment enclosure, relay, switch, and device; as specified in the technical sections or as indicated on the Drawings. Each nameplate inscription shall identify the name of the equipment, function and, when applicable, the position. Nameplates shall be melamine plastic, 0.125 inch thick, black with white letters. Surface shall be matte finish. Corners shall be square. Accurately align lettering and engrave into the core. Minimum size of nameplates shall be one by 2.5 inches. Lettering shall be a minimum of 0.25 inch high normal block style. All electrical equipment shall be labeled with the following:

1. Panel Name
2. Fed from "Panel Name" & "CKT #"
3. Amps
4. Volts
5. Phase

1.17 ARC FLASH LABEL

A. Provide arc flash labels for all electrical equipment with operating voltages greater than 50 volt per NEC 110.16.

1.18 WARNING SIGNS

A. Exterior warning and caution signs shall be weather resistant, nonfading, preprinted cellulose acetate butyrate signs with 20 gauge, galvanized steel backing, with colors, legend, and size appropriate to the location.

B. Interior warning and caution signs shall be aluminum signs with preprinted baked enamel finish and punched for fasteners. Colors, legend, and size appropriate to location.

1.19 WIRE AND CABLE MARKERS

A. Underground line marking tape shall be permanent, bright colored, continuous printed, metal backed, plastic tape compounded for direct burial service not less than 6 inches wide. Printed legend indicative of general type of underground line below.

B. Wire labels for wires smaller than No. 4. shall be vinyl or vinyl cloth, self-adhesive, wraparound, wire markers with preprinted numbers and letters. Wire sizes No. 4 and larger and multi conductor cables shall be marked with one-piece, nylon locking marker ties equal to Panduit PLM Series.

C. Reference Specification 16116 "Underground Electrical Construction" for further requirements.

PART 2 – PRODUCTS

2.01 MATERIALS

A. Materials and equipment shall be listed by UL unless it can be demonstrated that no UL standards exist for a specific item or class of equipment.

B. All other materials, not specifically described but required for a complete and operable electrical installation, shall be new, first quality of their respective kinds, specification grade or better, and as selected by the Contractor subject to the acceptance by the Engineer.

C. All materials and equipment furnished and installed on this project shall meet the most stringent efficiency standards of the local utility to qualify for the maximum rebate.

2.02 INTERCHANGEABILITY

A. In all design and purchasing, interchangeability of items of equipment, subassemblies, parts, motors, starters, relays and other items is essential. All similar items shall be of the same manufacturer, type, model and dimensions.

B. For ease of maintenance and parts replacement, to the maximum extent possible, use equipment of a single manufacturer.

C. The Engineer reserves the right to reject any submittal which contains equipment from various manufacturers if suitable materials can be secured from fewer manufacturers and to require that source of materials be unified to the maximum extent possible.

PART 3 – EXECUTION

3.01 COORDINATION

A. Prior to all Work of this section, carefully inspect the installed Work of all other trades and verify that all such Work is complete to the point where this installation may properly commence.

B. Field verify all locations and dimensions to ensure that the equipment will be properly located, readily accessible, and installed in accordance with all pertinent codes and regulations, the Contract Documents, and the referenced standards.

C. The Work shall be carefully laid out in advance, and where cutting, drilling, etc., of floors, walls, ceilings, or other surfaces is necessary for the proper installation, this Work shall be carefully done, and any damage to building, piping, or equipment shall be repaired by skilled mechanics of the trades involved at no additional cost to the Owner.

D. In the event any discrepancies are discovered, immediately notify the Owner's Representative in writing. Do not proceed with installation in areas of discrepancy until all such discrepancies have been fully resolved.

3.02 INSTALLATION

A. Install all equipment and fixtures in complete accordance with the manufacturer's recommendations and all pertinent codes and regulations.

B. Thoroughly inspect all items of equipment and any items dented, scratched, or otherwise damaged in any manner shall be replaced or repaired and painted to match original finish. All items so repaired and refinished shall be brought to the attention of the Engineer for inspection and acceptance.

C. Coordinate the installation of required supporting devices and sleeves to be set in poured-in-place concrete or supported from or on other structural components, as they are constructed.

D. Sequence, coordinate, and integrate installations of electrical materials and equipment for efficient flow of the Work. Give particular attention to large equipment requiring positioning prior to closing in the building and equipment which must be placed in service before further construction can take place.

E. Where mounting heights are not detailed or dimensioned, install systems, materials, and equipment to provide the maximum headroom possible.

F. The final routing of raceways shall be determined by structural conditions, interferences with other trades and by terminal locations on apparatus. The Engineer reserves the right of a reasonable amount of shifting at no extra cost up until time of roughing in the Work.

G. Where circuits are shown as "home-runs" all necessary fittings and boxes shall be provided for a complete raceway installation.

H. In general, wiring and raceway systems for security alarm, fire alarm, telephone and intercommunications systems are not indicated on the Drawings but shall be furnished and installed under this section.

I. Each lighting and each receptacle circuit shall have its own neutral, dedicated to that circuit. A common neutral for more than one signal phase circuit is not allowed.

J. Surface mounted panel boxed, junction boxes, conduits, etc., shall be supported by spacers to provide a clearance between wall and equipment.

K. Upon completion of all installation, lamping, and testing, thoroughly inspect all exposed portions of the electrical installation and completely remove all exposed labels, soils, markings and foreign material.

3.03 MARKING AND LABELING

A. All panelboards, indoor transformers, cabinets, control panels and other specified equipment shall be labeled with engraved laminated plastic plates with engraved letters. Punch tapes with mastic backings are not acceptable.

B. All starters, disconnect switches and other specified equipment shall be marked with engraved laminated plastic plates and engraved letters. Where individual switches are circuit breakers in power or distribution panelboards do not have cardholders, they shall be marked with ½" high labels.

C. All empty conduits shall have labels tied to the pull string at each end of each empty conduit, marked as to identification of each end. Junction boxes with circuits provided for future use shall be labeled with appropriate circuit designation.

D. All panelboards directories shall be filled out with typewritten identification of each circuit.

3.04 WIRE AND CABLE MARKERS

A. Tag control circuit conductors at both ends and at junction box splices using wire and cable markers with identification numbers as designated on equipment wiring diagrams. Provide typed listing to identify conductors by number and use.

B. Identify spare conductors, individually, at both ends and at junction box splices with number between 1 and 999. Do not duplicate numbers.

C. Identify wire numbers on terminal block marking strips.

D. Provide permanent plastic name tag indicating load for each feeder for all junction boxes, handholes and manholes. Label all process motor wires to yard equipment in handholes and manholes.

3.05 TESTS & SETTINGS

A. Provide the services of an independent Testing Agency to perform the specified tests for the following systems:

1. Ground resistance.

a. The Testing Company shall perform all testing in accordance with National Electrical Testing Association (NETA) standards and procedures. All testing results shall be submitted on NETA forms and the testing data shall be certified by the respective Agency. Test results shall indicate recommended action for a sub-par test results. Results shall list recommended test values that should be obtained for new installation.

B. Provide necessary material, equipment, labor and technical supervision to perform and complete the Electrical Acceptance Tests as required.

C. Acceptance tests as herein specified are defined as those tests and inspections required to determine that the equipment involved is acceptable as delivered to the job Site, that the equipment may be energized for final operational tests and is in accordance with the Specifications.

D. Final acceptance of the equipment and/or workmanship will depend upon performance characteristics as determined by the subject tests, in addition to complete operation tests, on all electrical equipment to show that it will perform the functions for which it was designed.

E. If the test and inspection data submitted should indicate deficiencies in the operation of the electrical apparatus or in the manufacturer thereof, the Contractor shall promptly implement the necessary adjustments, corrections, modifications and/or replacements necessary to be made to meet the specified requirements.

F. Upon completion of the remedial Work, the Testing Agency shall repeat all of the tests on components previously found deficient on the first test or any additional test if they be required. It shall be the responsibility and obligation of the Contractor to have all remedial Work accomplished as may be required by second and/or additional tests.

3.06 CLEANING

A. General: When all Work is completed and has been tested and accepted by the Owner's Representative, the Contractor shall clean all light fixtures, equipment,

and exposed surfaces that have been directly affected by this Work. The Contractor, insofar as the Work is concerned, shall at all times keep the premises in a neat and orderly condition and at the completion of the Work shall properly clean up and remove from the Site any excess materials.

END OF SECTION

SECTION 26 05 19

LOW-VOLTAGE ELECTRICAL POWER CONDUCTORS AND CABLES (FILED SUB-BID REQUIRED)

PART 1 – GENERAL

1.01 SCOPE

A. The Contractor shall provide the labor, tools, equipment, and materials necessary to install wires, cables, and connectors in accordance with the plans and as specified herein.

B. This section includes wires, cables, and connectors for power, lighting, signal, control, communications and related systems rated 600 volts and less.

1.02 RELATED DOCUMENTS

A. Drawings and general provisions of the Contract, including General and Supplementary Conditions apply to this section.

B. Related Sections:

1. Division 26: Section, "Common Work Results for Electrical".

1.03 QUALITY ASSURANCE

A. Reference Standards:

1. National Fire Protection Association (NFPA) 70 "National Electrical Code (NEC), and Massachusetts Electrical Code".

2. Underwriter's Laboratories, Inc. (UL) Compliance.

   a. UL Standard 83 Thermoplastic Insulated Wires and Cables.

   b. UL Standard 486A Wire Connectors and Soldering Lugs for Use with Copper Conductors.

   c. UL Standard 854 Service Entrance Cable.

3. National Electrical Manufacturers Association (NEMA) Compliance.

   a. WC-5 Thermoplastic Insulated Wire and Cable for the

   b. Transmission and Distribution of Electrical Energy.

   c. WC-7 Cross Linked Thermosetting Polyethylene Insulated Wire and Cable for the Transmission and Distribution of Electrical Energy.

d. WC-8 Ethylene Propylene Rubber Insulated Wire and Cable for the Transmission and Distribution of Electrical Energy.

4. Institute of Electrical and Electronic Engineers (IEEE) Compliance.

a. Standard 82 Test Procedure for Impulse Voltage Tests on Insulated Conductors.

1.04 SUBMITTALS

A. Furnish manufacturer's product data, test reports, and materials certifications as required.

B. Submit the following in accordance with Conditions of Contract and Division 1 specification sections:

1. Product data for electrical wires, cables, and connectors.

2. Product data for Megger insulation testing instrument.

3. Report sheets for Megger testing.

1.05 DELIVERY, STORAGE, AND HANDLING

A. Deliver wire and cable properly packaged in factory fabricated type containers, or wound on NEMA specified type wire and cable reels.

B. Store wire and cable in clean dry space in original containers. Protect products from weather, damaging fumes, construction debris, and traffic.

PART 2 – PRODUCTS

2.01 MATERIALS

A. General:

1. Provide factory-fabricated wires of sizes, ampacity ratings, and materials for applications and services indicated. Where not indicated, provide proper wire selection as determined by Installer to comply with project's installation requirements, NEC and NEMA standards. Select from the following UL types those wires with construction features which fulfill project requirements:

2. Provide color-coding for phase identification as specified herein.

3. Provide factory applied nylon or polyvinyl chloride (PVC) external jackets on wires and cables for pulls in raceways over 100 feet in length, for pulls in raceways with more than three equivalent 90 degree bends, for pulls in conduits underground or under slabs on grade, and where indicated.

B. Service & Distribution Wiring:

1. 98 percent conductivity copper.

2. 600 volt insulation, type XHHW.

3. U.L. listed for underground use in wet locations at 75° C.

4. Use XHHW for #4 and larger and THHN/THWN or XHHW for #6 and smaller.

C. Building Wiring:

1. 98 percent conductivity copper.

2. 600 volt insulation, type, THWN/THHN, or XHHW.

3. Stranded conductor: #14 AWG and larger.

4. Minimum branch circuit: #12 AWG.

5. Minimum #10 AWG for 120 volt circuits more than 100 feet long.

6. Minimum #10 AWG for 277 volt circuits more than 230 feet long.

D. Control Wiring:

1. Control wiring for digital/discrete signal wiring, shall be 600V, minimum #14AWG, THHN/THWN, copper stranded, unless specifically indicated otherwise.

2. Instrument cable for analog signal wiring (4-20mA DC) shall be shielded, 2-conductor, 300 volt rated, minimum #18 AWG, Belden No. 8760, Alpha Wire, or approved equal. Provide 600 volt rated cable where cable occupies the same enclosure and/or raceway with voltages greater than 300 volt as specified below.

3. Single Shielded Pair Instrument Cable.

   a. Tinned copper, XLPE insulated stranded conductors, No. 18 AWG minimum, twisted pair with overall shield, stranded tinned No. 18 AWG copper drain wire and overall PVC jacket. Rated for 600 volts minimum and conforming to UL 1581. Cables shall be rated for tray cable "TC" use where installed within a cable tray.

      1) Beldon Company.

      2) Okonite Company.

      3) Dekoron Wire and Cable Company.

4. Multi-paired Shielded Instrument Cable.

   a. Tinned copper, XLPE insulated stranded conductors, No. 16 AWG minimum, twisted pairs with shield over each pair, stranded tinned No. 18 AWG copper drain wire, and overall PVC outer jacket. Rated for 600 volts minimum and conforming to UL 1581 or UL 13. Cables shall be rated for tray cable "TC" use where installed within a cable tray.

      1) Beldon Company.

      2) Okonite Company.

      3) Dekoron Wire and Cable Company.

E. VFD Cable:

1. VFD load-side power cable shall be shielded type specifically listed for use with Variable Frequency Drives.

2. VFD cable shall be UL listed with 600V black XLPE insulation.

3. Cable shall be equipped with 100% foil shield.

4. Cables shall be stranded type with number and sizes of conductors as indicated on the Drawings.

5. Cable shall be equal to Belden Series 295XX, or Engineer approved equal.

F. Ethernet Cable:

1. Cabling shall be UL listed for the application and shall comply with EIA TIA/EIA-568-B and NFPA 70. Provide a labeling system for cabling as required by EIA TIA/EIA-606-A and UL 969.

2. When running cables in ceiling return air plenums, use Teflon Air Plenum cable, unless used inside conduit or tubing sleeve.

3. Provide conduit or tubing sleeves when passing through walls and floors.

4. Provide bushings at each end of conduit runs.

5. Cables shall be derated appropriately in accordance with NEC when combined in a common conduit run.

6. Areas used as air plenums: run fire-resistant teflon cable approved for use in air plenums.

7. Ethernet cable shall be CAT6 four pair, 24 AWG annealed copper, UTP cables with PVC jackets at all locations indicated on the Drawings.

8. All cables shall be "BLUE" in color.

9. All cables shall be homerun from to locations indicated in minimum 3/4"C.

10. All cables shall be terminated and tested at both ends of the cable run.

G. Splices:

1. No. 10 and smaller with 600-volt pressure type insulated connector of wire-nut type, or equal; soldered and crimped type not allowed. Ideal type "wire nut" Buchanan type "B-Cap" and Minnesota Mining (3M) type "Scotchlok".

2. No. 8 and larger with solderless lugs or solderless connectors of Lock-tite or similar type properly taped with plastic insulating tape, Minnesota Mining Co. #33, or equal, then two half-lap servings of friction tape, Manson, or equal.'

3. Wire connector systems for use with underground conductors shall be UL listed specifically for such use.

4. Service entrance conductors shall be installed without splices. Electrical equipment feeders shall be spliced only where shown or specifically approved. Control and metering conductors shall be installed without splices.

5. All splices shall be made only by specific permission of the Engineer and then only in manholes or pull boxes and shall be sealed watertight with a heat-shrunk insulation.

6. Tighten electrical connectors and terminals in accordance with manufacturer's published torque tightening values. Where manufacture's torqueing requirements are not indicated, tighten connectors and terminals to comply with tightening torques specified in UL Standards 486A and 486B.

7. Use UL listed splice for all underground wires, ducts buried, in conduit and in ducts. Connectors and splices shall be waterproof.

PART 3 – EXECUTION

3.01 WIRE AND CABLE INSTALLATION

A. All wire and cables shall be installed in conduit of size and type indicated on the drawing and specifications.

B. Install electrical cables, wires, and connectors in compliance with NEC.

C. Pull conductors simultaneously where more than one is being installed in same raceway. Use UL listed pulling compound or lubricant, where necessary.

D. Use pulling means including, fish tape, cable, rope, and basket weave wire/cable grips which will not damage cables or raceways. Do not use rope hitches for pulling attachment to wire or cable.

E. Conceal all cable in finished spaces.

F. Install exposed cable parallel and perpendicular to surfaces or exposed structural members, and follow surface contours, where possible.

G. Conductors shall be sized such that voltage drop does not exceed 3 percent for branch circuits or 5 percent for feeder/branch circuit combination.

H. Provide adequate length of conductors within electrical enclosures and train the conductors to terminal points with no excess. Bundle multiple conductors, with conductors larger than No. 10 AWG cabled in individual circuits. Make terminations so there is no bare conductor at the terminal.

I. All feeder and branch circuit wiring shall be color coded at all termination and splice locations. System neutrals shall be designated in addition to phase conductors. Equipment grounds shall be green.

J. The number of conductors shown on the Drawings is not necessarily the correct number required. As many conductors as are required in each case shall be installed. In general, grounding conductors are not scheduled.

K. In general, wiring for the following systems shall be installed in separate conduits. Do not mix categories in a single raceway.

1. 120 volt power wiring.

2. 120 volt control wiring, including, digital input and output signals.

3. 24 volt DC control wiring, including, digital input and output signals.

4. 24 volt DC analog control wiring (4-20mA).

5. Communications wiring.

6. Special & Emergency Systems

L. Conductors 600 volts and below shall be color coded in accordance with the following:

	120/208	480/277

CONDUCTOR	COLOR	COLOR
Phase A	Black	Brown
Phase B	Red	Orange
Phase C	Blue	Yellow
Neutral	White	White/Gray
Equipment Grounds	Green	Green

3.02 FIELD QUALITY CONTROL

A. The Contractor shall test each electrical circuit after permanent cables are in place with terminators installed, but before cable or wire is connected to equipment or devices to demonstrate that each circuit is free from improper grounds and short circuits.

B. The Contractor shall Megger Test, the insulation resistance between phases and from each phase to ground for each of the following feeder and motor branch circuits:

1. Distribution Equipment

2. Transformers

3. Variable Frequency Drives.

4. Motors.

C. The Megger Testing shall be witnessed by the Engineer/Architect. The Engineer/Architect shall be notified at least 48 hours in advance of testing.

D. Measure the insulation resistance with a digital "Megger" insulation testing instrument in accordance with manufacturer's recommendations. All test instruments are to be provided by the Contractor.

E. If any insulation resistance measures less than 50 megohms, the cable shall be considered faulty with the cable failing the insulation test. In moist environments, bag the ends of the cable to prevent a faulty Megger test.

F. Any cable which fails the insulation tests or which fails when tested under full load conditions shall be replaced with new cable for the full length and retested at no additional cost to Owner.

The below grade service or feeder splice shall be water immersion Megger tested in the presence of the Engineer. Each splice shall be immersed in a grounded water immersion bath for 24 continuous hours prior to and during the test. Criteria for failure shall be as described for cable above.

END OF SECTION

This page intentionally left blank

SECTION 26 05 26

GROUNDING AND BONDING FOR ELECTRICAL SYSTEMS (FILED SUB-BID REQUIRED)

PART 1 – GENERAL

1.00 SCOPE

A. The Contractor shall provide the labor, tools, equipment, and materials necessary to furnish and install grounding materials in accordance with the plans and as specified herein.

B. This section includes solid grounding of electrical systems and equipment.

1.01 RELATED DOCUMENTS

A. Drawings and general provisions of the Contract, including General and Supplementary Conditions apply to this section.

B. Related Sections:

1. Division 26: Section, "Common Work Results for Electrical".

2. Division 26: Section, "Wiring Devices".

1.02 QUALITY ASSURANCE

A. Reference Standards.

1. "National Electrical Code" (NEC), as applicable to electrical grounding and bonding, Art. 250. Use of conduit system for ground conductor shall not be allowed.

2. "Massachusetts Electrical Code" (MEC).

3. Underwriters' Laboratories, Inc. (UL). UL 467 "Electrical Grounding and Bonding Equipment."

4. Institute of Electrical and Electronic Engineers (IEEE) IEEE 81 and 142.

   a. 1-1983, "IEEE Guide for Measuring Earth Resistivity, Ground Impedance, and Earth Surface Potentials of a Grounded System (Part 1)."

   b. 141-1993, "IEEE Recommended Practice for Electric Power Distribution for Industrial Plants."

c. 142-1991, "IEEE Recommended Practice for Grounding of Industrial and Commercial Power Systems."

1.03 SUBMITTALS:

A. Submit the following in accordance with Conditions of Contract and Division 1 specification sections:

1. Product data for each type of product specified.

PART 2 – PRODUCTS

2.01 MATERIALS

A. Provide each electrical grounding system with assembly of materials required for complete installation including wires/cables, connectors, lugs, clamps, ground rods, bonding jumpers and accessories.

B. Provide electrical grounding conductors for grounding connections matched to power supply wiring materials and sized according to NEC.

C. Provide electrical connectors, lugs, clamps, boding jumpers and accessories as recommended by the respective manufacturer for the particular application, unless other indicated.

D. Ground rods; Solid copper clad, 3/4-inch diameter by 10 feet long.

E. Insulated conductors: Green in color.

F. Ground Bus. Bare annealed copper bars of rectangular cross section, ¼-inch x 3-inch x length as required, with 98 percent conductivity, rigidly attached to structure.

G. Bonding Strap Conductor/Connectors. Soft copper, 0.05 inch thick and 2-inches wide, except as indicated.

H. Pressure Connectors. High conductivity plated units.

I. Bolted Clamps. Heavy-duty units listed for the application.

J. Exothermic Welded Connections. Provided in kit form and selected for the specific types, sizes, and combinations of conductors and other items to be connected.

PART 3 – EXECUTION

3.01 GROUNDING AND BONDING

A. Ground main service entrance ground bus or lug of incoming service to enclosure, to building steel, to ground rods/grounding ring, to rebar in concrete footing, and to main cold water pipe. Install grounding bushings on service conduits. Use exothermic style ground connections to the ground rods and building steel.

B. Provide and install 600 volt insulated bonding conductors throughout the distribution system with connection to bonding (or grounding) terminal on each panel and panelboard with connections to other equipment where specifically indicated and noted.

C. Bonding conductors shall be continuous where possible. Where splices are required, provide T & B, or equal, compression connectors of approved pattern. Insulate connectors to equivalent thickness of conductors.

D. Provide grounding system for grounded circuit conductors of dry type transformer secondaries as indicated and required. Use exothermic style ground connections to building steel. Enclose grounding conductors in schedule 40 PVC conduit.

E. Provide equipment grounding conductors in all conduits containing power, control, or instrumentation conductors on the load side of the service equipment or on the load side of a separately derived system.

F. Comply with NEC Article 250 for sizes and quantities of equipment grounding conductors, except that larger sizes indicated or shown on the Contract Documents shall take precedence. Use of metallic conduit systems for equipment grounding as recognized by the NEC shall not be permitted under this specification.

G. Install grounding bushings on conduits at both primary and secondary entrances to transformers. Ground transformer enclosures to bushings.

H. Install bonding jumper for flexible metal conduit unless fittings are approved for grounding or otherwise comply with NEC.

1. Size jumper to match over-current device.

2. Green insulation.

3. Connect to grounding bushing at each end.

I. Ensure that entire electrical system is electrically continuous and permanently and effectively grounded, including all electrical equipment and motors.

1. Locate ground rods with a minimum of two rod length from each other and at least the same distance from any other grounding electrode. Connect ground conductors to ground rods by means of exothermic welds except at test wells and as otherwise indicated. Drive rods until tops are 24 inches below finished floor or final grade except as otherwise indicated.

J. Route grounding electrode conductors along the shortest and straightest paths possible without obstructing access or placing conductors where they may be subjected to strain, impact, or damage, except as indicated.

K. Ensure that grounding electrode conductor connections to interior piping, structural members, and the like are accessible for periodic inspection during the life of the structure.

3.02 BONDING FOR OTHER TRADES

A. Signal raceways, water piping, heating piping and metallic air ducts shall be bonded together and to the grounding conductor with No. 8 soft drawn bare solid conductors. Connections to pipes shall be made with cast clamps of like material as the pipes to which attached, to ducting terminated in a secure manner by best practical means, bonding across any flexible or insulated connections.

B. All bonding conductors shall be installed in a neat and workmanlike manner properly shaped for contour of surface involved and properly supported. At locations remote from the main service entrance panelboards, bond to the largest raceway nearby.

3.03 FIELD QUALITY CONTROL

A. Independent Testing Organization. Arrange and pay for the services of a qualified independent electrical testing organization to perform tests described below.

B. Measure ground resistance without the soil being moistened by any means other than natural precipitation or natural drainage or seepage and without chemical treatment or other artificial means of reducing natural ground resistance. Perform tests by the three-point fall of potential method in accordance with Section 9.03 of IEEE 81. Simple moisture addition is not acceptable.

C. Ground/resistance maximum values shall be as follows:

1. Equipment rated 500 kva and less. 10 ohms.

2. Equipment rated 500 kVA to 1000 kVA. 5 ohms.

3. Equipment rated over 1000 kVA. 3 ohms.

4. Unfenced substations and pad mounted equipment. 5 ohms.

5. Fence Grounds. 10 ohms.

D. The grounding tests results shall be submitted to the Engineer for review and approval. Where ground resistances exceed specified values, and if directed, modify the grounding system to reduce resistance values. Where measures are directed that exceed those indicated under the provisions of the Contract, covering change orders will be provided.

END OF SECTION

This page intentionally left blank

SECTION 26 05 34

RACEWAYS, BOXES AND SUPPORTING DEVICES (FILED SUB-BID REQUIRED)

PART 1 – GENERAL

1.00 SCOPE

A. The Contractor shall provide the labor, tools, equipment, and materials necessary to furnish and install raceways, boxes and supporting devices in accordance with the plans and as specified herein.

B. Types of products specified in this section include:

1. Conduit, Raceways & Fittings

2. Supporting Devices.

3. Boxes and fittings.

1.01 RELATED DOCUMENTS

A. Drawings and general provisions of the Contract, including General and Supplementary Conditions and Division 1 specification sections, apply to this section.

B. Related Sections:

1. Division 26: Section, "Common Work Results for Electrical".

2. Division 26: Section, "Low-Voltage Electrical Power Conductors and Cables".

1.02 QUALITY ASSURANCE

A. Reference Standards.

1. Underwriter's Laboratories, Inc. (UL) Listing and Labeling. Items provided under this section shall be listed and labeled by UL.

2. National Electrical Code (NEC).

3. Massachusetts Electrical Code (MEC).

4. National Electrical Manufacturers Association (NEMA).

1.03 SUBMITTALS

A. Furnish manufacturer's product data, test reports, and material certifications as required.

B. In accordance with Conditions of Contract and Division 1 specification sections:

1. Product data for cabinets and enclosures with classification higher than NEMA 1.

2. Shop drawings for floor boxes and boxes, enclosures and cabinets that are to be shop fabricated (non-stock items).

PART 2 – PRODUCTS

2.01 CONDUIT, RACEWAYS & FITTINGS

A. Provide conduit with ¾-inch diameter minimum, except where specifically shown smaller on the Contract Drawings.

B. Conduit, connectors, and fittings shall be approved for the installation of electrical conductors.

C. Refer to Table 3.01A for approved conduit installation guidelines.

1. Electrical Metallic Tubing (EMT):

2. EMT shall be rigid metallic conduit of the thinwall type in straight lengths, elbows, or bends and must conform to NEMA C80.3 and the requirements of UL 797.

3. Couplings and connectors shall be steel compression fittings. Where EMT enters outlet boxes, cabinets, or other enclosures, connectors must be the insulated-throat type, with a locknut. Fittings must meet the requirements of NEMA FB 1.

4. Rigid Galvanized Steel Conduit:

a. Rigid steel conduit (RGS), including couplings, elbows, bends, and nipples, shall conform to the requirements of UL 6 and NEMA C80.1 Steel fittings shall be galvanized by the hot-dip process.

b. Fittings for rigid steel conduit shall be threaded and shall conform to NEMA FB 1.

c. Gaskets shall be solid for fittings sized 1-1/2 inches and less. Conduit fittings with blank covers shall have gaskets except in clean, dry areas or at the lowest point of a conduit run where drainage is required.

d. Covers shall have captive screws and be accessible after the Work has been completed.

5. PVC-Coated Rigid Metal Conduit:

a. Rigid galvanized metal conduit coated with 40 mils thick polyvinylchloride coating.

b. Fittings, elbows, supporting devices and accessories shall include factory applied 20 mils thick polyvinylchloride coating and be manufactured by the same as that of the conduit.

c. Use tools as recommended by the manufacturer so as not to damage PVC coating. Where coating is damaged, touch-up with PVC paint in the field after installation.

6. Rigid Plastic Conduit:

a. PVC Schedule 40: Conduit shall be made of polyvinyl chloride compound that shall be homogeneous plastic material free from cracks, holes or foreign inclusions. Conduit shall be rated for use with 90 degree C conductors, UL Listed. Use solvent cement to join conduits as manufactured the same as the conduit manufacturer.

b. PVC Schedule 80: Heavy wall PVC conduit that shall be made of polyvinyl chloride compound that shall be homogeneous plastic material free from cracks, holes or foreign inclusions. Conduit shall be rated for use with 90 degree C conductors, UL Listed. Use solvent cement to join conduits as manufactured the same as the conduit manufacturer.

7. Flexible Metallic Conduit:

Flexible metallic (FM) conduit shall meet the requirements of UL 1.

a. Liquid tight flexible metallic conduit shall be provided with a protective jacket of PVC extruded over a flexible interlocked galvanized steel core to protect wiring against moisture, oil, chemicals, and corrosive fumes.

b. Fittings for flexible metallic conduit shall meet the requirements of UL 514B, Type I box connector, electrical, Type III coupling, electrical conduit, flexible steel, or Type IV adapter, electrical conduit.

8. Wireways:

a. Wireways and auxiliary gutters for use in exposed, dry locations shall be a prefabricated channel-shaped sheet metal trough with hinged or removable covers, associated fittings, and supports for housing, and protecting electrical wires and cables in accordance with UL 870.

b. Straight sections of trough, elbows, tees, crosses, closing plates, connectors, and hanging brackets shall be constructed from sheet steel of commercial quality not less than 16-gage. Sheet metal component parts shall be cleaned, phosphatized, and coated with a corrosion-resistant gray paint.

c. Straight sections of wireways and auxiliary gutters shall be solid or have knockouts as indicated in both sides and bottom, 3 inches on center.

d. Straight sections shall be not more than 5-feet long, with covers held closed with screws.

9. Conduit Seals:

a. Provide factory fabricated watertight conduit sealing bushing assemblies suitable for sealing around conduit, or tubing passing through concrete floors and walls. Provide a cast in place water stop wall sleeve with a mechanical pipe seal between the conduit and the sleeve. Construct seals with steel sleeve, malleable iron body, neoprene sealing grommets or rings, metal pressure rings, pressure clamps, and cap screws.

b. Provide E.Y.S. seal fittings with appropriate potting material where conduits enter or leave a Class 1, Division 1 or 2 environments or a Class 2, Division 1 or 2 environment, and chemical rooms.

2.02 SUPPORTING DEVICES

A. Supports, support hardware, and fasteners shall be protected with zinc coating or with treatment of equivalent corrosion resistance using approved alternative treatment, finish, or inherent material characteristic. Products for use outdoors shall be hot dip galvanized unless material is inherently corrosion resistant.

B. Refer to Table 2.02A for approved supporting device installation guidelines.

1. Conduit Supports:

a. Single run hangers: Galvanized steel conduit straps or clamps, or cast metal beam clamps. Perforated straps and spring steel clips and clamps will not be permitted.

b. Group run hangers: Minimum 12-gauge galvanized performed U-channel rack with conduit fittings; 25 percent spare capacity.

c. Hanger rods: Threaded steel, 3/8-inch diameter, or as identified on the Drawings.

d. Vertical run supports: Minimum 12-gauge galvanized performed U-channel struts with conduit fittings.

2. Equipment and Lighting Supports:

a. U-channel: 12-gauge galvanized performed U-channel struts with fixture and conduit fittings, as applicable, unless indicated otherwise on the Drawings.

3. Corrosive Area Supports:

a. Clamp Hangers, Pipe Straps, and Clamp Back Spacers for use with PVC-coated rigid metal conduit shall have 40mil gray PVC exterior coating.

b. Clamp Hangers, Pipe Straps, etc. for use with PVC nonmetallic conduit shall be of nonmetallic PVC material.

c. Hanger Rods: 20mil gray PVC exterior coated rod with threaded ends only 3/8" and 1/2" sizes as required.

d. Strut Support: 20mil gray PVC exterior coating strut. Standard channel, slotted channel, and back to back channel are acceptable.

Location/Equipment	Acceptable Support Type
Recycle Pump Station	Galvanized Steel U-Channel
Exterior	Galvanized Steel U-Channel

TABLE 2.02A – Supporting Devices

2.03 BOXES AND FITTINGS

A. Boxes must have sufficient volume to accommodate the number of conductors entering the box in accordance with the requirements of NFPA 70 and UL 514A.

B. In general, boxes that are exposed to weather, process areas, normally wet locations, and locations exposed in mechanical spaces shall be cast-metal. Boxes in all other finished areas shall be sheet metal. Boxes installed in corrosive areas, such as the chemical feed room, shall be nonmetallic.

C. Refer to Table 2.03A for approved enclosure types.

1. Sheet Metal Outlet Boxes:

a. Sheet Metal Outlet Boxes: Standard type galvanized steel, minimum four inch square or octagon by 1-1/2 inch deep.

b. Luminaire and Equipment Supporting boxes: Rated for weight of equipment supported; include 2 inch male fixture studs where required.

c. Single Wall Type: Minimum size, four inch square by 1-1/2 inch or 2-1/8 inch deep, except as noted. Provide dry wall device covers raised 3/4 inch minimum to insure flush finish mounting.

d. Ganged Wall Type: Minimum depth three inches except as noted, ganged as required under common plate to contain devices shown. On 277 volt circuits ganged boxes for switches shall contain only one circuit or equipment box with permanent barriers per NEC Art 404-8.

2. Cast Outlet Boxes:

a. Type FS shallow and type FD deep, cast feralloy.

b. Provide number of threaded hubs as required.

c. Use in all exterior, damp and locations exposed in mechanical spaces.

d. Provide gasketed cover and accessories by box manufacturer for complete weatherproofing. Provide correct box to accept weatherproof covers as specified.

3. Sheet Metal Pull & Junction Boxes:

a. Sheet metal boxes shall be standard type galvanized steel and must conform to UL 50.

b. Box dimensions shall be minimum four inch square or octagon by 2/1/2 inch deep.

c. Sizes up to 12x12x6 inch: Provide screw-type or hinged covers.

d. Sizes greater than 12x12x6 inch: Provide hinged covers.

e. Boxes shall be sized to accommodate all incoming raceways.

4. Nonmetallic Outlet, Device, and Wiring Boxes:

a. Conform to NEMA OS 2, "Nonmetallic Outlet Boxes, Device Boxes, Covers, and box Supports," and UL 514C, "Nonmetallic Outlet Boxes, Flush Device Boxes and Covers." Boxes shall be

molded polyvinyl chloride (PVC), or fiberglass units of type, shape, size, and depth to suit location and application.

b. Boxes shall be equipped with threaded screw holes for device and cover plate mounting. Each box shall have a molded cover of matching material suitable for the application and location installed.

Location/Equipment	Acceptable Enclosure Type
Recycle Pump Station	NEMA 12
Exterior – Equipment Structures	NEMA 4X Polycarbonate

TABLE 2.03A – Electrical Enclosure Types

PART 3 – EXECUTION

3.01 CONDUIT

A. Uses Permitted:

1. Use liquid tight flexible metal conduit for the final 24 inches of connections to motors or control items subject to movement or vibration.

2. Use RGS for all exterior aboveground installations unless otherwise noted.

3. Use PVC coated rigid steel conduit, or as scheduled below, for installation in corrosive areas, and other areas as identified on the Contract Drawings.

4. Exposed raceways in Manufacturing Area's, Utility Rooms, Mechanical Rooms, Warehouse Area's, etc., shall be Rigid Galvanized Steel below 15 ft.

5. Conduit and raceway runs in finished areas concealed in or behind walls, above ceilings, or exposed on walls and ceilings 15 feet or more above finished floors and not subject to mechanical damage may be electrical metallic tubing (EMT).

6. Use Schedule 40 PVC conduit for exterior direct buried installations. Use Schedule 40 PVC conduit for exterior concrete encased installations. Use Schedule 80 PVC conduit for underground installations under driveways. The transition from underground and from concrete encasement to riser shall be PVC coated rigid steel conduit to a minimum of 12" above finished floor and/or finished grade elevation. All elbows shall be prefabricated Rigid Steel to prevent wire burn through. Reference specification 26 05 43 "Underground Ducts and Raceways for Electrical Systems" for further requirements.

7. Install conduit seals for conduit penetrations of slabs on grade and exterior walls below grade and where indicated. Tighten sleeve seal screws until sealing grommets have expanded to form watertight seal. Provide seals for the interior of conduits that penetrate exterior or water bearing walls, consisting of gland type sealing bushings or RTV closed cell silicone foam.

8. Refer to Table 3.01A below for approved conduit types:

Location/Equipment	Approved Conduit Type
Recycle Pump Station	Rigid Galvanized Steel
Exterior – Above Grade	Rigid Galvanized Steel
Exterior – Below Grade	Schedule 40 PVC

TABLE 3.01A – Conduit Types

B. Power, lighting, control, emergency light and power, and special-service systems and all related components shall be installed in accordance with NFPA 70, and shall be enclosed in separate conduit or separate conduit systems as indicated on the Contract Drawings and as specified herein.

C. Any run of conduit between outlet and outlet, between fitting and fitting, or between outlet and fitting shall contain not more than the equivalent of three 90-degree bends, including those bends located immediately at the outlet or fitting. Field bends shall be made in accordance with the manufacturer's recommendations, which normally require use of a one-size-larger bender than would be required for uncoated conduit. Installed conduit and fittings shall be free of dirt and trash and shall not be deformed or crushed. Empty conduit shall have a pull rope stalled.

D. Conduit shall be installed with a minimum of 3 inches of free air space separation from mechanical piping.

E. Conduit in finished areas shall be installed concealed. Conduit passing through masonry or concrete walls shall be installed in sleeves. Conduit shall be securely clamped and supported at least every 10 feet vertically and 8 feet horizontally. Galvanized pipe straps shall be fastened to structure with bolts, screws, and anchors. Wooden masonry plugs shall not be used.

F. Install exposed conduits, parallel or perpendicular to walls, ceilings, or structural members. Do not run through structural members. Avoid horizontal runs within partitions or sidewalls. Avoid ceiling inserts, lights, or ventilation ducts or outlets. Do not run conduits across pipe shafts or ventilation duct openings and keep conduits a minimum of 6 inches from parallel runs of flues, hot water pipes, or other sources of heat. Wherever possible, install horizontal raceway runs above water and steam piping.

G. Do not run conduits exposed on the exterior surface of buildings. Conduits penetrating exterior walls below grade, at grade floors, or below grade floors shall be sealed to prevent moisture migration. The exterior of the conduit shall be sealed with a mechanical pipe seal. The interior conduit seal shall be a gland type sealing bushing or RTV closed cell silicone foam. Ensure that conduits do not retain water against these seals.

H. Raceways penetrating fire rated walls, floors, and partitions shall be sealed with a fire rated sealant.

I. All conduits shall be supported with materials specifically made for this purpose. Do not use wire hangers. Do not attach any parts of the raceway system to ventilation ducts. Conduit supports shall be attached to the building. Support conduits on each side of bends and on a spacing not to exceed the following: 6 feet for conduits smaller than 1 1/4 inches and 8 feet for conduits 1 1/4 inches and larger. Support riser conduits at each floor level with clamp hangers. All underground conduits shall be securely anchored to prevent movement during placement of concrete or backfill. Use precast separators and heavy gauge wire ties or other approved fasteners.

J. Provide E.Y.S. seal fittings with appropriate potting material where conduits enter or leave a Class 1, Division 1 or 2 environments or a Class 2, Division 1 or 2 environment, and chemical rooms.

K. Conduit connections to boxes and fittings shall be supported not more than 36 inches from the connection point. Conduit bends shall be supported not more than 36 inches from each change in direction. Conduit shall be installed in neat symmetrical lines parallel to the centerlines of the building construction and the building outline. Multiple runs shall be parallel and grouped whenever possible on common supports. Exposed ends of conduit without conductors shall be sealed with watertight caps or plugs.

L. Bonding wires shall be used in flexible conduit for all circuits. Flexible conduit shall not be considered a ground conductor.

M. Liquid tight flexible metallic conduits shall be used in wet and oily locations and to complete the connection to motor-driven equipment.

N. Electrical connections to vibration-isolated equipment shall be made with flexible metallic conduit in a manner that will not impair the function of the equipment.

O. A polypropylene pull rope with a tensile strength not less than 130 pounds shall be installed in empty conduit.

P. Electrical conduit may be embedded in concrete according to the provisions of Article 6.3 of ACI 318 "Building Code Requirements for Reinforced Concrete", provided the following conditions are met:

1. Outside diameter of conduit shall not exceed 1/3 of concrete thickness. Maximum conduit outside diameter shall not exceed 3 inches when embedded in slab.

2. Conduit shall not be placed closer than three diameters on center. Route conduit to minimize crossing of different conduit runs.

3. Conduit shall not be embedded in structural concrete slabs less than four inches thick.

4. A 1 1/2 inch minimum concrete cover shall be provided for conduits in structural concrete slabs.

Q. Installation of Underground Conduit:

1. Minimum of 3/4 inch conduit in or under concrete slab on grade.

2. Where conduits are installed in concrete slabs, on the ground, underground, or exposed to the weather, make all joints liquid tight and gas tight.

3. Bury all underground conduit, except under concrete slabs placed on fill, to a depth of at least 30 inches below finished grade unless otherwise indicated on the Drawings.

4. Slope ducts to drain away from buildings into manholes and/or handholes. Adjust final slopes to coordinate with existing site utilities.

5. Install on undisturbed soil where possible. Concrete encase conduits as shown on Drawings. Use pit run gravel and sand, placed 8 inch lifts and compacted for backfill.

6. Reference Specification 26 05 43 "Underground Ducts and Raceways for Electrical Systems" for further requirements.

R. Installation of Rigid Metal Conduit:

1. Ends of conduit shall be cut square, reamed and threaded, and joints shall be brought butt-to-butt in the couplings. Joints shall be mechanically tight. Conduit shall be protected against damage and the entrance of water or foreign material during construction.

2. Ninety-degree bends of conduit with a diameter larger than 1 inch shall be made with factory-made elbows. Conduit elbows larger than 2 ½ inches shall be long radius. Field-made bends and offsets shall be made with an approved hickey or conduit-bending machine. Changes in directions of runs shall be made with symmetrical bends or cast-metal fittings.

3. At connections to sheet metal enclosures and boxes, a sufficient number of threads shall project through to permit the bushing to be drawn tight against the end of the conduit, after which the locknut shall be pulled up sufficiently tight to draw the bushing into firm electrical contact with the box. Conduit shall be fastened to sheet metal boxes and cabinets with two locknuts where required by NFPA 70 where insulating bushings are used, where bushings cannot be brought into firm contact with the box, and where indicated.

4. Conduit joints shall be made with tapered threads set firmly. Each length of conduit cut in the field shall be reamed before installation. Where conduit is threaded in the field, each threaded end shall consist of at least five full threads. Corrosion-inhibitive compound (cold galvanizing paint) shall be used on all conduit threads or any locations where the original hot galvanized surface has been compromised.

5. Conduit stubbed-up through concrete floors for connections to free-standing equipment except motor-control centers, cubicles, and other such items of equipment shall be provided with a minimum of a 12" riser above the floor slab is of sufficient thickness; if not, a floor box shall be provided and set flush with the finished floor. Conduits installed for future use shall be terminated with a coupling and plug set flush with the floor.

3.02 SUPPORTING DEVICES

A. Install supporting devices to fasten electrical components securely and permanently in accordance with NEC requirements.

B. Coordinate with the building structural system and with other electrical installations.

C. Conform to manufacturer's recommendations for selection and installation of supports.

D. Install individual and multiple (trapeze) raceway hangers and riser clamps as necessary to support raceways. Provide U-bolts, clamps, attachments, and other hardware necessary for hanger assembly and for securing hanger rods and conduits.

E. Support parallel runs of horizontal raceways together on trapeze type hangers.

F. Support individual horizontal raceways by separate pipe hangers. Spring steel fasteners may be used in lieu of hangers only for 1 1/2 inch and smaller raceways serving lighting and receptacle branch circuits above suspended ceilings only. For hanger rods with spring steel fasteners, use 1/4 inch diameter or larger threaded steel. Use spring steel fasteners that are specifically designed for supporting single conduits or tubing.

G. In vertical runs, arrange support so the load produced by the weight of the raceway and the enclosed conductors is carried entirely by the conduit supports with no weight load on raceway terminals.

H. Support miscellaneous electrical components as required to produce the same structural safety factors as specified for raceway supports. Install metal channel racks for mounting cabinets, panelboards, disconnects, control enclosures, pull boxes, junction boxes, transformers, and other devices.

I. Install sleeves in concrete slabs and walls and all other fire rated floors and walls for raceways and cable installations. For sleeves through fire rated wall or floor construction, apply UL listed fire-stopping sealant in gaps between sleeves and enclosed conduits and cables.

3.03 BOXES AND FITTINGS

A. Pullboxes shall be furnished and installed where necessary in the conduit system to facilitate conductor installation. Conduit runs longer than 100 feet or with more than three right-angle bends shall have a pull box installed at a convenient intermediate location.

B. Boxes and enclosures shall be securely mounted to the building structure with supporting facilities independent of the conduit entering or leaving the boxes.

C. Bonding jumpers shall be used around concentric or eccentric knockouts.

D. Installation of Outlet Boxes:

1. Use nonmetallic boxes in corrosive areas such as chemical feed area and as designated on the plans.

2. Use explosion proof boxes in Hazardous areas as identified on the Drawings.

3. Use cast metal boxes in all other locations. Each box with associated covers and fittings shall have a NEMA rating for each location installed.

END OF SECTION

SECTION 26 05 43

UNDERGROUND DUCTS AND RACEWAYS FOR ELECTRICAL SYSTEMS (FILED SUB-BID REQUIRED PER SECTION 26 05 00)

PART 1 – GENERAL

1.00 SUMMARY

A. Contractor shall provide all labor, materials, equipment and incidentals as shown, specified and required to furnish and install underground duct banks, manholes and handholes

B. Provide underground conduit duct banks with pullboxes for power, and control circuits as shown on the Drawings.

C. Coordination: Duct bank routing when shown on the Drawings is diagrammatic. Coordinate installation with piping and other underground systems and structures and locate clear of interferences. Coordinate handhole installation with piping, sheet piling and other underground systems and structures and locate clear of interferences.

1.01 RELATED DOCUMENTS

A. Drawings and general provisions of the Contract, including General and Supplementary Conditions and Division 1 Specification Sections, apply to this Section.

B. Division 26, Section "Common Work Results for Electrical".

C. Division 26, Section "Raceways, Boxes, & Supporting Devices".

D. Division 26, Section "Low-Voltage Electrical Power Conductors and Cables".

E. Division 26, Section "Grounding and Bonding for Electrical Systems".

F. Division 26, Section "Low-Voltage Electrical Service Entrance".

1.02 QUALITY ASSURANCE

A. Reference Standards: Electrical material and equipment shall conform in all respects to the latest approved standards of the following:

1. National Electrical Manufacturers Association (NEMA).
2. The American National Standards Institute (ANSI).
3. The Institute of Electrical and Electronic Engineers (IEEE).
4. Insulated Cable Engineers Association (ICEA).
5. National Electrical Code (NEC).
6. National Electrical Safety Code (NESC).

7. ASTM A 48, Gray Iron Castings.

8. ANSI A14.3, Safety Requirements for Fixed Ladders.

9. OSHA.

1.03 SUBMITTALS

A. Shop Drawings: Submit for approval the following:

1. Layouts showing the proposed routing of duct banks and the locations of handholes.

2. Profiles of duct banks showing crossings with piping and other underground systems.

3. Typical cross sections.

4. Installation procedures.

5. Manufacturer's technical information for handholes and accessories proposed for use.

6. Drawings showing interior and exterior handhole dimensions and details of openings, jointing, inserts, reinforcing, size and locations of openings, and accessory locations.

7. Product Data for nonmetallic conduit and manhole accessories.

B. Record Drawings:

1. Layouts showing the actual routing of duct banks including the dimensions and depth of the top of duct bank below grade. Record drawings for duct banks should also include cross sections of the duct bank indicating the circuit, use, conduit size, orientation and number of conduits.

2. Locations of handholes and areas of reinforcement.

1.04 DEFINITIONS

A. Duct: Electrical conduit and other raceway, either metallic or nonmetallic, used underground, embedded in earth or concrete.

B. Duct bank: 2 or more conduits or other raceway installed underground in the same trench or concrete envelope.

C. Handhole: An underground junction box in a duct or duct bank with cover accessible from grade.

1.05 PROJECT CONDITIONS AND COORDINATION

A. Coordination with other Underground Utilities:

1. Coordinate conduit routing, duct bank and handholes with other new and existing underground utilities. Revise locations and elevations as required to suit field conditions and ensure that conduits, duct runs and handholes do not interfere with existing and new underground utilities and piping.

PART 2 – PRODUCTS

2.01 DUCT BANK CONDUIT

A. Duct: Schedule 40 and Schedule 80 PVC conduit and fittings in accordance with Division 26 Section "Raceways, Boxes and Supporting Devices".

B. Rigid Steel Conduit: Rigid steel conduit and fittings in accordance with Division 26 Section "Raceways, Boxes and Supporting Devices".

C. All shielded instrumentation and communications cable shall be installed in ferrous metal, steel conduit throughout the entire run of conduit from end to end.

2.02 HANDHOLES

A. The pull/splice box underground enclosures shall be constructed of polymer concrete consisting of sand and aggregate bound together with a polymer resin. Internal reinforcement may be provided by means of steel, fiberglass, or a combination of the two. Handholes for installation in roadways shall concrete reinforced H20 traffic rated.

B. Enclosure:

1. The enclosure must be manufactured with an open or closed bottom and a removable cover. The enclosures shall be green or concrete gray in color.

2. The enclosures shall be designed to be installed flush to grade with the cover fitting flush to the box.

3. The enclosures shall be suitable for installation in either direct or buried native soil, embedded in concrete, or embedded in asphalt surfacing. (A concrete collar is required for installation in asphalt).

4. The enclosures shall be of a stackable design for greater installation flexibility.

5. All covers are to be equipped with a minimum of two stainless steel lockdown mechanisms. All covers shall have a logo recessed into the cover and it shall read electric.

6. All enclosure covers will have some type of recessed access point to allow removal of the cover with a hook. The access points will be placed in such a location to allow for the greatest amount of leverage and safety possible.

7. Enclosures shall be designed and suitable for installation and use through a temperature range of -40°C (-40°F) to 60°C (140°F).

8. A certified copy of all test reports must be signed and stamped by a registered professional engineer and submitted prior to shipment of products.

C. Material Requirements:

1. Permanent deflection of any surface shall not exceed 10 percent of the maximum allowable static design load deflection.

2. The covers shall be skid resistant and have a maximum coefficient of friction of 0.50 on the top surface of the cover. Coatings will not be allowed.

3. Any point on the covers must be able to withstand a 70 foot-pound impact administered with a 12 pound weight having a "C" tup (ASTM D-2444) without puncturing or splitting. The test shall be performed with the cover resting on a flat, rigid surface such as concrete or a 1" steel plate.

4. Covers shall have molded lettering, ELECTRIC or COMM as applicable.

5. Fastening devices used to secure the cover to the box shall be capable of withstanding a minimum torque of 15 foot-pounds and a minimum straight pullout strength of 750 pounds.

6. The material is tested according to the requirements of ASTM D543, Section 7, Procedure 1, for chemical resistance. The manufacturer is responsible for proof of compliance with the latest version of the ASTM standards.

7. Other required acceptance standards are:

a. ASTM D756, Procedure E: Accelerated Service Exposure.

b. ASTM G53: Recommended Practice for Operating Light and Water Exposure on Nonmetallic Materials (with a U.V.A. 340 bulb).

c. ASTM D570, Section 5, 6.1, 6.5: Water Absorption.

d. ASTM D790: Flexural Properties

e. ASTM D635: Flammability Test.

D. Manufacturers: Provide handholes as manufactured by

1. Strongwell Quazite or approved equal.

PART 3 – EXECUTION

3.01 GENERAL

A. Where duct lines pass through concrete walls, concrete envelopes shall be extended through the finished flush with inside surfaces. Watertight construction joints of an approved type shall be provided.

B. Duct banks shall be reinforced when laid on backfill covering new pipelines, roads, parking lots or any are subject to vehicular traffic. Beneath these areas, install reinforcing bars as shown on the Drawings, extending 10 ft beyond area needing protection.

C. Duct lines shall be laid in trenches on mats of gravel not less than 6 inches thick and well graded.

D. All electrical duct banks shall be colored red for safety purposes.

E. Install raceways to drain away from buildings. Raceways between manholes or handholes shall drain toward the manholes or handholes. Raceway slopes shall not be less than 3 in per 100 ft.

F. Make raceway entrances to buildings and vaults with hot dipped rigid galvanized steel conduit not less than 10 ft long. Conduits which are not concrete encased for runs below floor slabs in slab-on-grade construction shall be hot dipped rigid galvanized steel conduit. Conduits which are concrete encased for runs below floor slabs in slab-on-grade construction shall be encased under the slab to their respective equipment.

G. Raceway terminations at manholes shall be with end bells for PVC conduit and insulated throat grounding bushings with lay-in type lugs for metal conduit.

3.02 INSTALLATION

A. The General Contractor shall provide the excavation and backfilling required for ductbanks and handhole installation; the Electrical Contractor shall install the ductbank and all handholes as shown on the Drawings.

B. Make duct bank installations and penetrations through foundation walls watertight.

C. Assemble duct banks using non-magnetic saddles, spacers and separators. Position separators to provide 3-inch minimum separation between the outer surfaces of the ducts.

D. Make bends with sweeps of not less than 48-inch radius or 5 degree angle couplings.

E. Make a transition from non-metallic to PVC coated rigid steel conduit where duct banks enter structures or turn upward for continuation above grade. Terminate the ducts in insulated grounding bushings. Continue ducts inside buildings with steel, metallic conduit.

F. Where ducts enter handholes, terminate the ducts in suitable end bells.

G. Provide expansion/deflection fittings in accordance with the requirements specified in Division 26, Section "Raceways, Boxes and Supporting Devices".

H. Do not backfill with material containing large rock, paving materials, cinders, large or sharply angular substances, corrosive material or other materials which can damage or contribute to corrosion of ducts or cables or prevent adequate compaction of fill.

I. After completion of the duct bank and prior to pulling cable, pull a mandrel, not less than 12 inches long and with a cross section approximately one-fourth inch less than the inside cross section of the duct, through each duct. Then pull a rag swab or sponge through to make certain that no particles of earth, sand or gravel have been left in the duct.

J. Install a bare stranded copper duct bank ground cable in each duct bank envelope. Make ground electrically continuous throughout the entire duct bank system. Connect ground cable to building and station ground grid or to equipment ground buses. In addition, connect ground cable to steel conduit extensions of the underground duct system. Provide ground clamp and bonding of each steel conduit extension, where necessary to maintain continuity of the ground system. Terminate ground conductor at last manhole or handhole for outlying structures.

K. Install a warning ribbon approximately 12 inches below finished grade over all underground duct banks. The identifying ribbon shall be a PVC tape, 3-inches wide, yellow color, permanently imprinted with "CAUTION BURIED ELECTRIC LINE BELOW" in black letters.

L. Plug and seal all empty spare ducts entering buildings and structures. Seal all ducts in use entering buildings and structures. Seal shall be watertight, O-Z/Gedney Type Dux Duct Sealing Compound or equal.

M. Install duct banks in conformance with National Electrical Code and National Electrical Safety Code.

N. Install handholes where shown on Drawings. Verify final locations in field.

O. Complete installation of handholes so that structures are watertight.

P. Cable Racks:

1. Individually support each cable at each hook on porcelain insulators.

Q. Duct Bank Conduit Spacers: Non-metallic, snap together intermediate and bottom pieces, sized for conduit diameter and code spacing. Carlon "Span-Loc" or approved. Separators shall be compatible with the conduit utilized. The joints of the conduits shall be staggered by rows and layers so as to provide a duct line having the maximum strength. During construction, partially completed duct lines, shall be protected form the entrance of debris such as mud, sand, and dirt by means of suitable conduits plugs. As each section of a duct line is completed, a testing mandrel not less than 12 inches long with a diameter ¼ inch less than the size of the conduit, shall be drawn through each conduit, after which a brush having the diameter of the duct, and having stiff bristles shall be drawn through until the conduit is clear of all particles of earth, sand and/or gravel; conduit plugs shall then be immediately installed. Provide a plastic pull rope, having a minimum of 3 additional feet at each end, in all spare ducts.

3.03 DUCT BANK INSTALLATION

A. All bends shall have a radius grater than 36 inches or 12 times conduit inside diameter whichever is greater.

B. Install duct with minimum slope of 4 inches per 100 feet. Slope duct away from building entrances.

C. Install no more than equivalent of three 90-degree bends between pull points.

D. Provide suitable fittings to accommodate expansion and deflection where required.

E. Use suitable separators and chairs installed not greater than 4 feet on centers. Conduit separation shall be per code, and not less than 3 inches.

F. Tops of direct burial ducts and conduits shall be:

1. Not less than 24in and not less than shown on the Drawings, below finished grade.

2. Not less than 30in and not less than shown on the Drawings, below roads and other paved surfaces.

3.04 CABLE PULLING

A. The inspection, handling, storage, temperature conditioning prior to installation, bending and training limits, pulling limits, and calculation parameters for installation of all cables must comply with the manufacturer's recommendations. For ease of installation and prevention of cable damage, the Contractor shall utilize quadrant blocks located properly along the cable run. Failure to comply with any of the above shall make this Contractor responsible for any cable failures that occur within the manufacturer's warranty period.

B. Cable lubricant shall be soapstone, graphite or talc for rubber or plastic jacketed cables.

C. Lubricants for assisting in the pulling or jacketed cables shall be those specifically recommended by the cable manufacturer.

D. Cable pulling tensions shall not exceed the maximum pulling tensions recommended by the cable manufacturer.

E. All medium voltage cables shall be individually fire/arc proofed.

3.05 CABLE TERMINATING

A. Terminations of insulated power and lighting cables shall be protected from accidental contact, deterioration of coverings and moisture by the use of terminating devices and materials. Terminations shall be made using materials and method as indicated or specified herein or as designed by the written instruction of the cable manufacturer and termination kit manufacturer.

3.06 GROUNDING

A. Duct banks shall be grounded with a bare stranded copper ground wire that is run within the duct bank and is bonded and grounded at both ends. Conduit shall not be used as the ground conductor.

B. Install a bare stranded copper duct bank ground cable in each duct bank envelope. Make ground electrically continuous throughout the entire duct bank system. Connect ground cable to building and station ground grid or to equipment ground buses. In addition, connect ground cable to steel conduit extensions of the underground duct system, manholes and handholes. Provide ground clamp and bonding of each steel conduit extension, where necessary to maintain continuity of the ground system.

END OF SECTION

SECTION 26 27 00

LOW-VOLTAGE DISTRIBUTION EQUIPMENT (FILED SUB-BID REQUIRED)

PART 1 – GENERAL

1.00 SCOPE

A. The Contractor shall provide the labor, tools, equipment, and materials necessary to install Distribution Equipment in accordance with the plans and as specified herein.

B. This section includes lighting and power panelboards, transformers and associated auxiliary equipment rated 600 volts or less.

1.01 QUALITY ASSURANCE

A. Reference Standards.

1. National Electrical Code (NEC).

2. Massachusetts Electrical Code (MEC).

3. Underwriters' Laboratories, Inc. (UL) Compliance. UL 50 - Enclosures for Electrical Equipment, UL 67 – Panelboards, UL 48 – MCCB's and CB Enclosures.

1.02 SUBMITTALS

A. Furnish manufacturer's product data, test reports, and materials certifications as required.

B. Submit the following in accordance with Conditions of Contract and Division 1 specification sections.

1. Product data for each type panelboard, accessory item, component, and transformer specified.

2. Shop drawings from manufacturers of panelboards and transformers including dimensioned plans, sections, and elevations. Show tabulations of installed devices, major features, voltage rating and AIC ratings.

3. Panel schedules for installation in panelboards. Submit final versions after load balancing.

PART 2 – PRODUCTS

2.01 PANELBOARDS

A. Panelboards shall have mains and circuits as indicated on the Drawings and designed for three phase, four wire, solid neutral, 60-hertz service rated for 480/277 volt, or three phase, four wire rated for 120/08V service as indicated. Where main circuit breakers are indicated on the Drawings, provide main circuit breaker type interiors. Back-fed branch circuit breakers shall not be utilized for main circuit breakers.

B. Panelboards shall be flush or surface mounted, etc., as indicated by panel schedule; code gauge galvanized steel boxes and enameled steel fronts sized for minimum 6" minimum side, top and bottom gutters, or greater as required by NEC.

C. Each panel shall have door in door trim with full length piano hinge to allow for easy access to wireways.

D. Each panel shall have door provided with cylinder lock and latch allowing for common key access to each panel. Each panel shall have fully typed out directory indicating outlets, fixtures, devices and locations served by the intended circuit. Panelboards for use as service disconnecting means shall additionally conform to UL 869.

E. Mechanical lugs furnished with panelboards shall be cast copper or copper alloys of sizes suitable for the conductors indicated to be connected thereto. Panelboards shall have fully capacity neutral bus, ground bus and bolt-on circuit breakers.

F. Circuit breakers shall be molded-case, thermal-magnetic, quick-make, quick-break, bolt-in type. Interrupting rating of circuit breakers shall be as indicated. Provide with suitable handle locks where indicated. Where interrupting rating is not indicated, panels for 120/208 volts service shall have breakers with 10,000 ampere RMS minimum interrupting rating at 240 volts, main circuit breakers where indicated shall have 25,000 ampere RMS minimum interrupting rating at 240 volts. Panels for 480/277 volt service shall have breakers with 14,000 ampere RMS minimum interrupting rating at 480 volts.

G. Distribution panelboards shall be circuit breaker type and shall have mains and circuits as indicated on the Drawings and all designed for three phase, four wire, solid neutral with bonding bar, 60-hertz service rated for 208/120 volt or 480/277 volt service as indicated. Circuit breaker interrupting ratings shall be a minimum of 25,000 amperes, RMS or as indicated on the Contract Drawings. Distribution panelboards shall be of same manufacturer as breaker panelboards and shall have UL label.

H. Acceptable Manufacturers:

1. Square D. Co.

2. General Electric Co.

3. Cutler-Hammer/Westinghouse Products.

2.02 DRY TYPE TRANSFORMERS

A. Transformers with steel enclosures ventilated as required and provided with suitable terminal compartments and terminals designed to receive copper conductors. Ventilated transformers located against walls shall be located sufficient distance from wall for proper ventilation. Coordinate with manufacturers recommendations.

B. Sound levels for transformers shall not exceed NEMA established sound levels for specialty dry type transformers.

C. Insulation shall be rated not to exceed 115 C rise over 40 degrees ambient. Transformer insulation system shall be in accordance with ANSI/NEMA Standard St-20.

D. Transformers for three phase circuits shall be three phase type rated for 480 volts delta primary and 208/120 volt, three phase, four wire wye secondary, except as noted.

E. Transformers shall have 2-1/2% taps for above and below voltage on primary side.

F. Acceptable Manufacturers:

1. Square D. Co.

2. General Electric Co.

3. Eaton/Westinghouse Products.

G.

PART 3 – EXECUTION

3.01 PANELBOARDS

A. Install panelboards and accessory items in accordance with NEMA PB 1.1,"General Instructions for Proper Installation, Operation, and Maintenance of Panelboards Rated 600 Volts or Less" and manufacturers' written installation instructions.

B. Mounting Heights. Top of trim 6'-2" above finished floor, except as indicated.

C. Circuit Directory: Typed and reflective of final circuit changes required to balance panel loads. Obtain approval before installing. Number branch circuit devices accordingly to correspond to circuit directory.

D. After substantial completion, conduct load balancing measurements and circuit changes. Should the difference at any panelboard between phases exceed 20 percent, rearrange circuits in the panelboard to balance the phase loads within 20 percent. Take care to maintain proper phasing for multi-wire branch circuits.

E. Make equipment grounding connections for panelboards as indicated.

F. Provide ground continuity to main electrical ground bus indicated.

G. Electrical Tests: Include the following items performed in accordance with manufacturer's instructions:

1. Ground resistance test on system and equipment ground connections.

2. Test main and subfeed overcurrent protective devices.

3.02 TRANSFORMERS

A. Transformers shall be suitable for wall and platform mounting for ratings 45kVA and below. Provide mounting supports and platforms as required and indicated. Submit detailed shop drawings of supports on all transformers.

B. Provide isolation mounts for all transformers to minimize noise transmission. Transformer connections shall have a minimum of eighteen (18) inches of flexible conduit.

C. Secondary midpoint of wye connected transformers shall be grounded as required by NEC for separately derived source.

3.03 CLEANING

A. Upon completion of installation, inspect all panelboards and transformers. Remove paint splatters and other spots, dirt, and debris. Touch up scratches and mars of finish to match original finish.

END OF SECTION

SECTION 26 27 26

WIRING DEVICES
(FILED SUB-BID REQUIRED)

PART 1 – GENERAL

1.00 SCOPE

A. The Contractor shall provide the labor, tools, equipment, and materials necessary to furnish and install wiring devices in accordance with the plans and as specified herein.

B. This section includes the following:

1. Flush Wiring Devices.
2. Control Relays.
3. Motor Control Relays/Contactors.
4. Control Stations.
5. Thermostats.
6. Stand Alone Smoke and Heat Detectors.

1.01 RELATED DOCUMENTS

A. Drawings and general provisions of the Contract, including General and Supplementary Conditions and Division 01 specification sections, apply to this section.

B. Related Sections:

1. Division 26: Section, "Common Work Results for Electrical".
2. Division 26: Section, "Low-Voltage Electrical Power Conductors and Cables".
3. Division 26: Section, "Grounding and Bonding for Electrical Systems".
4. Division 26: Section, "Raceways, Boxes & Supporting Devices".

1.02 QUALITY ASSURANCE

A. Reference Standards:

1. National Electrical Code (NEC)

2. Massachusetts Electrical Code (MEC)

3. Underwriter's Laboratories, Inc. (UL)

4. National Electrical Manufacturers Association (NEMA) Compliance.

1.03 SUBMITTALS

A. Furnish manufacture's product data, test reports, and materials certifications in accordance with Division 1, Submittals.

PART 2 – PRODUCTS

2.01 FLUSH OR SURFACE MOUNTED WIRING DEVICES

A. Wall Switches:

1. Wall Switches shall be specifications grade, toggle operated, quiet type alternating current (ac) switches, NEMA heavy duty class, rated at 20 ampere, 120/277 v. Provide matching two pole, 3-way or 4-way switches as indicated. Comply with UL 20 and NEMA Standards.

2. Where two or more switches are to be installed at the same location, they must be mounted in one-piece ganged switch boxes, with appropriate gang cover plate.

3. Provide waterproof switches where indicated. All switches installed in the Chemical Feed Room, Sand/GAC Filter Rooms and Dual Media Filter Room shall be waterproof tumbler operated switches.

4. Explosion Proof Switches: Explosion Proof/Dust-Ignition Proof Wall Switches shall be specifically approved by Underwriters' Laboratories, Inc., or Factory Mutual for particular "Class," "Division," and "Group" of hazardous locations involved. Switches shall be tumbler operated equal to Appleton EDS Series, Crouse Hinds, or approved equal. Switches shall be factory sealed specifically designed to a U.L. standard so that any arcing devices are within a chamber which contains any explosions. Switches shall be approved for installation without any additional external sealing fittings. Switches shall be specifically designed to accept conduit sizes indicated on the Contract Drawings.

B. Receptacles:

1. Convenience receptacles for interior use shall be specification grade, industrial heavy duty type, 20-ampere, 125-volt ac, 2-pole, 3-wire, back wiring, metal plaster ears, single, duplex (as indicated) grounded, conforming to NEMA FB 11, NEMA WD 1 and to the 5-20R configuration in NEMA WD 6. Provide waterproof in-use covers where indicated and required.

2. Ground Fault Interrupter (GFI) Receptacles shall be specification grade. Provide 20 ampere, "feed through" type ground fault circuit interrupter, with integral heavy duty NEMA 5 20R duplex receptacles arranged to protect connected downstream receptacles on same circuit. Provide unit designed for installation in a 2 3/4 inch deep outlet box without adapter, grounding type, Class A, Group 1. Provide waterproof in-use covers where indicated and required.

3. Locking receptacles shall conform to NEMA WD 6. One (1) plug shall be furnished with each locking receptacle.

4. Receptacles shall meet the requirements for retention of plugs, overload, temperature, and assembly security in accordance with NEMA WD 1.

5. Special purpose outlets: NEMA heavy duty class, grounding type with matching plug. Coordinate NEMA type with equipment manufacturer.

6. Explosion Proof Receptacles: Explosion Proof/Dust-Ignition Proof Receptacles shall be specifically approved by Underwriters' Laboratories, Inc., or Factory Mutual for particular "Class," "Division," and "Group" of hazardous locations involved. Receptacles installed in hazardous locations shall be factory sealed as provide by Appleton Contendor U-Line Series, Crouse Hinds, or approved equal. Receptacles shall be 20 amp rated designed with dead front construction. To operate, a matching plug shall be utilized. When the plug is inserted and rotated, the receptacle shall be activated. Receptacles shall be approved for installation without any additional external sealing fittings. Receptacle enclosures shall be constructed of copper-free aluminum and malleable iron. Provide each receptacle with matching 20 amp plug. Plugs shall be constructed of thermoplastic polyester specifically designed for use where moisture and corrosion may be present. Plugs shall be designed for use with general purpose receptacles in non-classified locations. Provide each receptacle with two (2) spare matching plugs.

C. Device Plates:

1. Wall plates for flush wall switches and receptacles shall be the appropriate type and size and shall match the wiring devices for which they are

intended. Dimensions for openings in wall plates shall be in accordance with NEMA WD 1.

2. Process area: Plates in process areas for receptacles, telephone, etc., shall Galvanized steel, smooth rolled outer edge sized to fit box.

3. Plates in general areas for receptacles, telephone, etc., shall be stainless steel.

D. Weatherproof Device Plates:

1. Provide weatherproof device plates where indicated and required.

2. Interior and Exterior Wet Locations: Device plates for interior and exterior wet locations shall be die-cast aluminum, gasket, with corrosion resistant screws to match plate cover finish. Provide weatherproof receptacles with vertical "in-use" covers for complete weatherproofing when plug is inserted.

3. Chemical Feed Room: Device plates for installation in the Chemical Feed Room shall be gasket nonmetallic polyvinyl chloride (PVC), or fiberglass units, for complete weatherproofing and protection against corrosive chemicals. Provide receptacles with vertical "in-use" covers for complete weatherproofing when plug is inserted.

2.02 CONTROL RELAYS

A. Control Relays: Allen Bradley Bulletin 700-H Series, Square D or equal.

B. 120V coil as required or as indicated.

C. Number of poles as indicated or required.

D. Electrically Held, except as noted.

E. Enclosure shall be NEMA-1, except as noted.

2.03 MOTOR CONTROL RELAYS/CONTACTORS

A. 120V and 277V coils as required or as indicated

B. Number of poles as indicated or required.

C. Horsepower rated for connected motor.

D. Electrically Held, except as noted.

E. Enclosure shall be NEMA-1, except as noted.

F. 600V Rated.

2.04 CONTROL STATIONS

A. All control stations shall be industrial, heavy duty type, with oil-tight construction and clearly marked legend plates. Enclosures shall be provided based upon location in accordance with NEMA requirements and as required for the area classifications as indicated and NEMA rating to meet environmental conditions of installed location.

B. Enclosures shall be common or grouped mounted for devices in the same location. Devices shall include front mounted nameplates identifying function.

C. Subject to compliance with requirements, provide control stations by one of the following:

1. Allen Bradley Company.

2. Appleton Electric Company.

3. Crouse-Hinds Company.

4. Approved equal.

D. Selector Switches:

1. Selector Switches shall be non-illuminated, standard knob operated rated for use at 120VAC. The knob operator insert shall be white in color. Units shall be rotary type with round or oval handles and positioning device to securely hold switch in selected position. Where shown on the Drawings selector switches shall be key type.

2. Provide compatible nameplate for each selector switch identifying intended functions: (I.E. "HAND/OFF/AUTO", "LOCAL/OFF/REMOTE", "JOG/OFF/AUTO", ETC.) as indicated on the Contract Drawings.

3. Units shall be 30.5mm selector switches.

E. Pushbuttons:

1. Switches shall be non-illuminated momentary or maintained type rated for use at 120 VAC. Switches shall green in color for "START" pushbuttons, and shall be red in color for "STOP" pushbuttons.

2. Provide compatible nameplate for each pushbutton identifying intended functions (I.E. "STOP", "START", ETC.).

3. Emergency stop operators shall be mushroom style, 2-position push-pull type, with number of contacts as indicated on the Contract Drawings. Stations shall be provided with push-pull padlocking attachment and legend plate reading: "Push to Stop, Pull to Start."

4. Units shall be 30.5mm pushbuttons.

2.05 THERMOSTATS

A. Thermostats:

1. Electric thermostats shall be line voltage type, suitable for the application and location installed. Sensors shall be provided with a two-wire connection to the controller that is polarity and wire type insensitive. Provide with manual adjustment dials, which provide a maximum and minimum range of approximately -10-100F. Unit shall have form C dry contact for low temperature alarm monitoring via the facilities SCADA control panel. Electric thermostats shall be equal to Dayton, Model 2E815, or approved equal.

2.06 STAND ALONE SMOKE DETECTORS

A. Stand Alone Smoke Detectors shall be powered by 120vac with available battery backup. An LED power on indicator shall be provided for verification that the unit is active.

B. Unit shall be provided with test switch which shall electronically activate the chamber to simulate smoke and check for proper operation. Unit shall be provided with electronic horn with a level of 85 decibels at 10 feet. Unit shall meet the requirements of U.L Standard 217.

C. Unit shall be provided with Form C dry-contact for alarming to the facility SCADA system.

2.07 STAND ALONE HEAT DETECTORS

A. Stand Alone Heat Detectors shall be powered by 120vac with available battery backup. An LED power on indicator shall be provided for verification that the unit is active.

B. Unit shall be provided with test switch which shall electronically activate the detector and check for proper operation. Unit shall be provided with electronic horn with a level of 85 decibels at 10 feet. Unit shall meet the requirements of U.L Standard 217.

C. Unit shall be provided with Form C dry-contact for alarming to the facility SCADA system.

PART 3 – PART 3 - EXECUTION

3.01 WIRING DEVICES

A. Wall Switches and Receptacles:

1. Wall switches and receptacles shall be so installed that when device plates are applied, the plates will be aligned vertically to within 1/16-inch.

2. Ground terminal of each flush-mounted receptacle shall be bonded to the outlet box with an approved green bonding jumper.

B. Device Plates:

1. Device plates for switches that are not within sight of the loads controlled shall be suitably engraved with a description of the loads.

2. Device plates and receptacle cover plates for receptacles other than 15-ampere, 125-volt, single-phase, duplex, convenience outlets shall be suitably engraved, showing the circuit number, voltage, frequency, phasing, and amperage available at the receptacle; for example: RP1-12, 208 VOLTS, 60 HERTZ, 3-PHASE, 30 AMPERES. If engraving is not practical, an engraved laminated phenolic identification plate may be applied.

3. Device plates shall be identified on the inside by circuit number and panelboard.

C. Control Stations:

1. Mount equipment so that sufficient access and working space is provided for ready and safe operation and maintenance.

2. Securely fasten equipment to walls or other surfaces on which they are mounted. Provide independent galvanized steel supports where no wall or other surface exists.

3. Install in conformance with National Electrical Code.

END OF SECTION

This page left intentionally blank

SECTION 26 28 16

ENCLOSED SWITCHES AND CIRCUIT BREAKERS (FILED SUB-BID REQUIRED)

PART 1 – GENERAL

1.00 RELATED DOCUMENTS

A. Drawings and general provisions of the Contract, including General and Supplementary Conditions and Division 1 Specification Sections, apply to this Section.

B. Division 26, Section "Common Work Results for Electrical".

C. Division 26, Section "Grounding and Bonding for Electrical Systems".

D. Division 26, Section "Low-Voltage Distribution Equipment".

1.01 SUMMARY

A. This Section includes individually mounted enclosed switches and circuit breakers used for the following:

1. Service disconnecting means.

2. Feeder and branch-circuit protection.

3. Motor and equipment disconnecting means.

1.02 SUBMITTALS

A. Product Data: For each type of switch, circuit breaker, accessory, and component indicated. Include dimensions and manufacturers' technical data on features, performance, electrical characteristics, ratings, and finishes.

B. Shop Drawings: For each switch and circuit breaker.

1. Dimensioned plans, elevations, sections, and details, including required clearances and service space around equipment. Show tabulations of installed devices, equipment features, and ratings. Include the following:

a. Enclosure types and details.

b. Current and voltage ratings.

c. Short-circuit current rating.

d. UL listing for series rating of installed devices.

e. Features, characteristics, ratings, and factory settings of individual over-current protective devices and auxiliary components.

f. Time-current curves, including selectable ranges for each type of circuit breaker.

2. Wiring Diagrams: Power, signal, and control wiring. Differentiate between manufacturer-installed and field-installed wiring.

C. Field Test Reports: Submit written test reports and include the following:

1. Test procedures used.

2. Test results that comply with requirements.

3. Results of failed tests and corrective action taken to achieve test results that comply with requirements.

D. Manufacturer's field service report.

E. Maintenance Data: For enclosed switches and circuit breakers and for components to include in maintenance manuals specified in Division 1. In addition to requirements specified in Division 1 Section "Closeout Procedures," include the following:

1. Routine maintenance requirements for components.

2. Manufacturer's written instructions for testing and adjusting switches and circuit breakers.

3. Time-current curves, including selectable ranges for each type of circuit breaker.

1.03 QUALITY ASSURANCE

A. Electrical Components, Devices, and Accessories: Listed and labeled as defined in NFPA 70, Article 100, by a testing agency acceptable to authorities having jurisdiction, and marked for intended use.

B. Comply with NEMA AB 1 and NEMA KS 1.

C. Comply with UL #98, Enclosed Switches and UL #508, Industrial Control Equipment.

D. Federal Specification W-S-865- Heavy Duty Switches.

E. Comply with NFPA 70.

F. Product Selection for Restricted Space: Drawings indicate maximum dimensions for enclosed switches and circuit breakers, including clearances between enclosures, and adjacent surfaces and other items. Comply with indicated maximum dimensions.

1.04 PROJECT CONDITIONS

A. Environmental Limitations: Rate equipment for continuous operation under the following conditions, unless otherwise indicated:

1. Ambient Temperature: Not less than minus 22 deg F (minus 30 deg C) and not exceeding 104 deg F (40 deg C).

2. Altitude: Not exceeding 6600 feet (2000 m).

1.05 COORDINATION

A. Coordinate layout and installation of switches, circuit breakers, and components with other construction, including conduit, piping, equipment, and adjacent surfaces. Maintain required workspace clearances and required clearances for equipment access doors and panels.

PART 2 – PRODUCTS

2.01 MANUFACTURERS

A. Manufacturers: Subject to compliance with requirements, provide products by one of the following:

1. Square D Co.

2. Eaton Corp

3. General Electric Co.; Electrical Distribution & Control Division.

2.02 ENCLOSED SWITCHES

A. Enclosed, Non-fusible Switch: NEMA KS 1, heavy duty type with lockable handle.

B. Rating: Voltage and number of poles as required for motor or equipment circuits being disconnected. Switches used for service entrance equipment shall bear a UL label and be rated for service entrance equipment.

C. Enclosed, Fusible Switch, 800 A and Smaller: NEMA KS 1, heavy duty type with clips to accommodate specified fuses, lockable handle with two padlocks, and interlocked with cover in closed position.

D. Double Throw Safety Switches shall be unfused double throw with center OFF position, quick-make, quick-break mechanism, visible blades in the OFF position and safety handle. Rating, voltage and number of poles as required for the circuits being disconnected

2.03 ENCLOSED CIRCUIT BREAKERS

A. Molded-Case Circuit Breaker: NEMA AB 1, with interrupting capacity to meet available fault currents. Thermal-Magnetic Circuit Breakers: Inverse time-current element for low-level overloads, and instantaneous magnetic trip element for short circuits. Adjustable instantaneous, magnetic trip setting for circuit-breaker frame sizes 150 Amp through 400 Amp.

B. Molded-Case Circuit-Breaker Features and Accessories: Standard frame sizes, trip ratings, and number of poles. Lugs shall be mechanical style suitable for number, size, trip ratings, and material of conductors.

C. Application Listing: Appropriate for application; Type SWD for switching fluorescent lighting loads; Type HACR for heating, air-conditioning, and refrigerating equipment.

D. Electronic Trip Unit Circuit Breakers (Frame sizes 400 Amp and larger): RMS sensing, interchangeable harmonic trip unit, LED trip indicators with the following field-adjustable settings:

1. Long-time pickup levels and adjustments (L).

2. Short-time pickup levels adjustments (S).

3. Instantaneous trip adjustments (I).

4. Ground fault pickup level, time delay, I2t response and adjustments (G).

5. Remote trip indication and control.

6. Modbus communication Capability; Integral communication module with functions and features compatible with power monitoring, harmonic monitoring, and control system.

2.04 DOUBLE THROW SAFETY SWITCHES

A. Unfused, double throw with center OFF position, quick- make, quick-break mechanism, visible blades in the OFF position and safety handle. Rating, voltage and number of poles as required for the circuits being disconnected.

2.05 ENCLOSURES

A. NEMA AB 1 and NEMA KS 1 to meet environmental conditions of installed location.

1. Reference Specification 26 05 34 "Raceways, Boxes and Supporting Devices" for approved enclosure types.

2.06 FACTORY FINISHES

A. Manufacturer's standard prime-coat finish ready for field painting.

B. Finish: Manufacturer's standard grey paint applied to factory-assembled and -tested enclosures before shipping.

PART 3 – EXECUTION

3.01 EXAMINATION

A. Examine elements and surfaces to receive enclosed switches and circuit breakers for compliance with installation tolerances and other conditions affecting performance. Proceed with installation only after unsatisfactory conditions have been corrected.

3.02 INSTALLATION

A. Mount equipment so that sufficient access and working space is provided for ready and safe operation and maintenance.

B. Securely fasten equipment to walls or other structural surfaces on which they are mounted. Provide independent galvanized steel supports where no wall or other structural surface exists

C. Temporary Lifting Provisions: Remove temporary lifting eyes, channels, and brackets and temporary blocking of moving parts from enclosures and components.

D. Install in conformance with National Electrical Code.

3.03 IDENTIFICATION

A. Identify field-installed conductors, interconnecting wiring, and components; provide warning signs as specified in Division 26.

B. Enclosure Nameplates: Label each enclosure with engraved metal or laminated-plastic nameplate mounted with corrosion-resistant screws.

C. For double throw switches identify source of each service identify source of each service.

3.04 CONNECTIONS

A. Install equipment grounding connections for switches and circuit breakers with ground continuity to main electrical ground bus.

B. Install power wiring. Install wiring between switches and circuit breakers, and control and indication devices.

C. Tighten electrical connectors and terminals according to manufacturer's published torque-tightening values. If manufacturer's torque values are not indicated, use those specified in UL 486A and UL 486B.

3.05 FIELD QUALITY CONTROL

A. Testing: After installing enclosed switches and circuit breakers and after electrical circuitry has been energized, demonstrate product capability and compliance with requirements.

1. Procedures: Perform each visual and mechanical inspection and electrical test indicated in NETA ATS, Section 7.5 for switches and Section 7.6 for molded-case circuit breakers. Certify compliance with test parameters.

2. Correct malfunctioning units on-site, where possible, and retest to demonstrate compliance; otherwise, replace with new units and retest.

3.06 CLEANING

A. On completion of installation, inspect interior and exterior of enclosures. Remove paint splatters and other spots. Vacuum dirt and debris; do not use compressed air to assist in cleaning. Repair exposed surfaces to match original finish.

END OF SECTION

SECTION 26 29 13

ENCLOSED CONTROLLERS
(FILED SUB-BID REQUIRED)

PART 1 – GENERAL

1.00 SUMMARY

A. This Section includes ac general-purpose manual motor starters and magnetic motor starters rated 600 V and less that are supplied as enclosed units.

1.01 RELATED DOCUMENTS

A. Drawings and general provisions of the Contract, including General and Supplementary Conditions and Division 1 Specification Sections, apply to this Section.

B. Division 26, Section "Common Work Results for Electrical".

C. Division 26, Section "Grounding and Bonding for Electrical Systems".

D. Division 26, Section "Low-Voltage Distribution Equipment".

1.02 SUBMITTALS

A. Product Data: For each type of enclosed controller. Include dimensions and manufacturer's technical data on features, performance, electrical characteristics, ratings, and finishes.

B. Shop Drawings: For each enclosed controller.

1. Dimensioned plans, elevations, sections, and details, including required clearances and service space around equipment. Show tabulations of installed devices, equipment features, and ratings. Include the following:

   a. Enclosure types and details.

   b. Nameplate legends.

   c. Short-circuit current rating of integrated unit.

   d. UL listing for series rating of over-current protective devices in combination controllers.

   e. Features, characteristics, ratings, and factory settings of individual over-current protective devices in combination controllers.

   f. Listing of the motor starters to be furnished with their location and equipment to be controlled and identified

2. Wiring Diagrams: Power, signal, and control wiring. Differentiate between manufacturer-installed and field-installed wiring.

C. Load-Current and Overload-Relay Heater List: Compile after motors have been installed and arrange to demonstrate that selection of heaters suits actual motor nameplate full-load currents.

1.03 QUALITY ASSURANCE

A. Manufacturer Qualifications: Maintain, within 100 miles (160 km) of Project Site, a service center capable of providing training, parts, and emergency maintenance and repairs.

B. Source Limitations: Obtain enclosed controllers of a single type through one source from a single manufacturer.

C. Electrical Components, Devices, and Accessories: Listed and labeled as defined in NFPA 70, Article 100, by a testing agency acceptable to authorities having jurisdiction, and marked for intended use.

D. Comply with NEMA Standard ICS2-110, General Standards for Manual and Magnetic Controllers.

E. Comply with NEMA Standard ICS2-321 AC General Purpose Class A Controller for Squirrel Cage Induction Motors, 600 volts and less.

F. UL #508, Industrial Control Equipment.

G. Comply with NFPA 70.

H. Product Selection for Restricted Space: Drawings indicate maximum dimensions for enclosed controllers, including clearances between enclosed controllers, and for adjacent surfaces and other items. Comply with indicated maximum dimensions.

1.04 DELIVERY, STORAGE, AND HANDLING

A. Store enclosed controllers indoors in clean, dry space with uniform temperature to prevent condensation. Protect enclosed controllers from exposure to dirt, fumes, water, corrosive substances, and physical damage.

B. If stored in areas subjected to weather, cover enclosed controllers to protect from weather, dirt, dust, corrosive substances, and physical damage. Remove loose packing and flammable materials from inside controllers; install electric heating of sufficient wattage to prevent condensation.

1.05 COORDINATION

A. Coordinate layout and installation of enclosed controllers with other construction including conduit, piping, equipment, and adjacent surfaces. Maintain required workspace clearances and required clearances for equipment access doors and panels.

B. Coordinate installation of roof curbs, equipment supports, and roof penetrations.

C. Coordinate features of enclosed controllers and accessory devices with pilot devices and control circuits to which they connect.

D. Coordinate features, accessories, and functions of each enclosed controller with ratings and characteristics of supply circuit, motor, required control sequence, and duty cycle of motor and load.

1.06 EXTRA MATERIALS

A. Furnish extra materials described below that match products installed and that are packaged with protective covering for storage and identified with labels describing contents.

1. Spare Fuses: Furnish one spare for every five installed, but not less than one set of three of each type and rating.

2. Indicating Lights: Two of each type installed.

PART 2 – PRODUCTS

2.01 MANUFACTURERS

A. Manufacturers: Subject to compliance with requirements, provide products by one of the following:

1. Manual and Magnetic Enclosed Controllers:

a. Square D Co

b. Eaton Corp

c. General Electrical Distribution & Control.

d. Rockwell Automation Allen-Bradley Co.; Industrial Control Group.

2.02 ENCLOSED MANUAL MOTOR STARTERS

A. Description: NEMA ICS 2, general purpose, Class A, with toggle action operated, horsepower rated with thermal and overload element.

B. Provide in enclosure suitable for use with the manual motor starter.

C. Enclosure cover shall include a white ON indicating light.

D. Where indicated on the Drawings manual motor starters rated 600 volt, 3 pole and 240 volt, 2 pole, 20 amp without overload protection shall be provided to be used as disconnects.

2.03 ENCLOSED MAGNETIC MOTOR STARTERS

A. Description: NEMA ICS 2, Class A, full voltage, across the line, non-reversing, magnetic coil operated, horsepower rated, NEMA sized, with thermal overload bimetallic protection, unless otherwise indicated. Starter shall consist of one contactor, one overload relay, and a magnetic only circuit breaker.

B. Control Circuit: 120 V; obtained from integral control power transformer of sufficient capacity to operate connected pilot, indicating and control devices, plus 100 percent spare capacity. Include two primary fuses for 480-volt systems, one secondary fuse and the other secondary leg grounded. For other voltage systems include one secondary fuse and the other secondary leg grounded.

C. Combination Controller: Factory-assembled combination controller and disconnect switch.

1. Circuit-Breaker Disconnecting Means: NEMA AB 1, motor-circuit protector with field-adjustable, short-circuit trip coordinated with motor locked-rotor amperes.

2. Disconnecting means shall be provided with an external operating handle mounted in the flange of the enclosure which has a means to lock the handle in the off position. Mechanism shall prevent enclosure door from opening when handle is in the on position.

D. Overload Relay: Ambient-compensated melting alloy, bimetallic type, interchangeable heaters with inverse-time-current characteristic and NEMA ICS 2, Class 20 tripping characteristic. Manually reset from outside the enclosure by means of an insulated button with normally open auxiliary contact for remote alarm purposes and separate heater elements sized for the full load ampere and service factor of the actual motors furnished. They shall have a visible trip indicator, a reset mechanism that resets on the upstroke only and a manual weld check which checks the overload contacts for welding. Provide with heaters or sensors in each phase matched to nameplate full-load current of specific motor to which they connect and with appropriate adjustment for duty cycle.

E. Contactor contacts shall be silver alloy, double break, and shall be inspectable on NEMA Sizes 00 through 4 without the use of tools. Size 5 and larger shall be inspectable with standard tools. They shall be replaceable without removing the line, load, or control wiring from the starter, and replaceable without removing the starter from the enclosure.

F. Contactor coils shall be the encapsulated type, and shall be replaceable on NEMA Sizes 00 through 4 without the use of tools. Size 5 and larger shall be replaceable with standard tools. They shall be replaceable without removing the line, load, or control wiring from the starter, and replaceable without removing the starter from the enclosure.

G. Controls: Combination starters shall be provided with hand-off-auto selector switch, start push button, stop push button, red on indicating light (across coil) and green off indicating light. Operating controls, pilot and control devices shall be provided for each starter for proper operation. Pilot and control devices shall be mounted on the enclosure door. The auto position shall enable the motor to perform start/stop operations from remote dry contact from external control panel. Auxiliary contacts to remotely signal temperature control panel run and overload conditions. Provisions to accept remote dry contact from stop station for shutdown of the motor.

H. The short circuit withstand rating of the combination starter is to be 65K RMS amperes symmetrical.

2.04 ENCLOSURES

A. NEMA AB 1 and NEMA KS 1 to meet environmental conditions of installed location.

1. Reference Specification 26 05 34 "Raceways, Boxes and Supporting Devices" for approved enclosure types.

2.05 ACCESSORIES

A. Devices shall be factory installed in controller enclosure, unless otherwise indicated.

B. Push-Button Stations, Pilot Lights, and Selector Switches: NEMA ICS 2, heavy-duty type.

C. Stop and Lockout Push-Button Station: Momentary-break, push-button station with a factory-applied hasp arranged so padlock can be used to lock push button in depressed position with control circuit open.

D. Hand-Off –Automatic three position selector switch.

E. Control Relays: Auxiliary and adjustable time-delay relays.

2.06 FACTORY FINISHES

A. Manufacturer's standard prime-coat finish ready for field painting.

B. Finish: Manufacturer's standard grey paint applied to factory-assembled and -tested enclosed controllers before shipping.

PART 3 – EXECUTION

3.01 EXAMINATION

A. Examine areas and surfaces to receive enclosed controllers for compliance with requirements, installation tolerances, and other conditions affecting performance.

B. Proceed with installation only after unsatisfactory conditions have been corrected.

3.02 APPLICATIONS

A. Select features of each enclosed controller to coordinate with ratings and characteristics of supply circuit and motor; required control sequence; duty cycle of motor, drive, and load; and configuration of pilot device and control circuit affecting controller functions.

B. Select horsepower rating of controllers to suit motor controlled.

3.03 INSTALLATION

A. For control equipment at walls, bolt units to wall or mount on lightweight structural-steel channels bolted to wall. For controllers not at walls, provide freestanding racks as required.

B. Mount equipment so that sufficient access and working space is provided for ready and safe operation and maintenance.

C. Securely fasten equipment to walls or other surfaces on which they are mounted. Provide independent galvanized steel supports reasonably close to motor where no wall or other surface exists.

D. Certified factory start-up shall be provided for each solid state reduced voltage soft starter provided. Service engineers shall be employed by the manufacturer or be certified by the manufacturer and provide start-up services including physical inspection of drive and connected wiring and final adjustments to meet specified performance requirements.

3.04 IDENTIFICATION

A. Identify enclosed controller components and control wiring according to Division 26 Section "Basic Electrical Requirements".

3.05 CONTROL WIRING INSTALLATION

A. Install wiring between enclosed controllers according to Division 26 Section "Low-Voltage Electrical Power Conductors and Cables"

B. Bundle, train, and support wiring in enclosures.

C. Connect hand-off-automatic switch and other automatic-control devices where applicable.

1. Connect selector switches to bypass only manual- and automatic-control devices that have no safety functions when switch is in hand position.

2. Connect selector switches with enclosed controller circuit in both hand and automatic positions for safety-type control devices such as low- and high-pressure cutouts, high-temperature cutouts, and motor overload protectors.

3.06 CONNECTIONS

A. Conduit installation requirements are specified in other Division 26 Sections. Drawings indicate general arrangement of conduit, fittings, and specialties.

B. Ground equipment.

C. Tighten electrical connectors and terminals according to manufacturer's published torque-tightening values. If manufacturer's torque values are not indicated, use those specified in UL 486A and UL 486B.

3.07 FIELD QUALITY CONTROL

A. Testing: Perform the following field quality-control testing:

1. Perform each electrical test and visual and mechanical inspection indicated in NETA ATS, Sections 7.5, 7.6, and 7.16.

2. Certify compliance with test parameters.

3. Correct malfunctioning units on-site, where possible, and retest to demonstrate compliance; otherwise, replace with new units and retest.

B. Test Reports: Prepare a written report to record the following:

1. Test procedures used.

2. Test results that comply with requirements.

3. Test results that do not comply with requirements and corrective action taken to achieve compliance with requirements.

3.08 ADJUSTING

A. Set field-adjustable switches and circuit-breaker trip ranges.

3.09 CLEANING

A. Clean enclosed controllers internally, on completion of installation, according to manufacturer's written instructions. Vacuum dirt and debris; do not use compressed air to assist in cleaning.

3.10 STARTUP SERVICE

A. Verify that enclosed controllers are installed and connected according to the Contract Documents.

B. Verify that electrical wiring installation complies with manufacturer's submittal and installation requirements in Division 26 Sections.

C. Complete installation and startup checks according to manufacturer's written instructions.

END OF SECTION

SECTION 26 29 23

VARIABLE FREQUENCY MOTOR CONTROLLERS (FILED SUB-BID REQUIRED)

PART 1 – GENERAL

1.00 SCOPE

A. The Contractor shall provide the labor, tools, equipment, and materials necessary to furnish and install variable frequency drives in accordance with Section 01 Submittal Procedures.

B. Section includes Variable Frequency Drives for the following equipment:

1. Recycle Pump P-1

2. Recycle Pump P-2

1.01 RELATED DOCUMENTS

A. Drawings and general provisions of Contract, including General and Supplementary Conditions and Division 01 specification sections, apply to Work of this section.

B. Related Sections:

1. Division 26, Section "Common Work Results for Electrical".

2. Division 26, Section "Low-Voltage Distribution Equipment".

3. Division 26, Section "Enclosed Controllers".

4. Division 26, Section "Grounding and Bonding for Electrical Systems".

5. Division 26, Section "Low-Voltage Electrical Power Conductors and Cables".

1.02 QUALITY ASSURANCE

A. Reference Standards:

1. National Electrical Code® (NEC®).

2. Massachusetts Electrical Code® (MEC®).

3. UL® 198C - High-Interrupting Capacity Fuses; Current Limiting Type.

4. UL 198E - Class R Fuses.

5. NECA, "Standard of Installation" - published by National Electrical Contractors Association.

6. NEMA AB 1 - Molded Case Circuit Breakers.

7. NEMA ICS 2 - Industrial Control Devices, Controllers, and Assemblies.

8. NEMA ICS 6 - Enclosures for Industrial Controls and Systems.

9. NEMA KS 1 - Enclosed Switches.

B. Qualifications:

1. Firms regularly engaged in manufacture of variable frequency drives of types and sizes required, whose products have been in satisfactory use in similar service for not less than 5 years, or as indicated.

1.03 SUBMITTALS

A. Furnish manufacturer's product data, test reports, and materials certifications as required.

B. Submit the following in accordance with conditions of contract and Division 1 specification sections:

1. Product Data: Submit manufacturer's data and installation instructions.

2. Wiring Diagrams: Submit power and control wiring diagrams for connections to electrical power panels, feeders, and equipment. Differentiate between portions of wiring which are manufacturer installed and portions, which are field installed.

3. Motor Overloads: Submit for approval motor overload sizes for each new VFD furnished. Overload size shall be based on actual motor nameplate data and power factor correction size; where applicable. Include thermal overload compensation sizing information where motor(s) are operated at temperatures different than the motor controller.

PART 2 – PRODUCTS

2.01 VARIABLE FREQUENCY DRIVES (VFD)

A. Variable Frequency Drives shall be equal to ABB, Belden Square-D or approved equal.

B. The VFD shall convert the input AC main power to an adjustable frequency and voltage as defined in the following sections. The VFD shall be UL Listed and labeled as a complete unit, and shall include all accessories and requirements as described in this section and as identified on the Drawings.

C. Each drive shall have a rating in horsepower (HP) equal to or greater than the motor name plate horsepower and each drive shall have a continuous output current rating equal to or greater than the motor full load amperes (FLA).

D. Input Power:

1. The drive is available in two ranges and is self-adjustable to accept an input voltage range between; 380-500 VAC, three phase +/-10%, 525-690 VAC, three phase +/-10%.

2. Displacement power factor 0.98, lagging, over the entire speed range. The efficiency of the drive is a minimum of 97.5% at full load and speed.

E. Environment:

1. Storage ambient temperature range: -40° C to 60° C (-40° to 140°F).

2. Operating ambient temperature range without derating: IP21 / Type 10° C to 40° C (0° to 104° F).

3. The relative humidity range is 5% to 95% non-condensing.

4. Operating elevation: up to 1000 Meters (3,300ft) without derating.

5. Shock: 15G peak for 11ms duration

6. Vibration: 2.0 mm (0.0787 inches) displacement, 1G peak, EN50178 / EN60068-2-6

F. Output Power:

1. The output voltage is adjustable from 0 to rated motor voltage (400 V, 460 V, 575 V or 690 V). The output frequency range is adjustable from 0 to 320Hz. The inverter section will produce a pulse width modulated (PWM) waveform using latest generation IGBTs.

G. Motor and Application Data:

1. The AC drives shall have the ability to operate variable torque loads. The speed range shall be from a minimum speed of 1.0 Hz to a maximum speed of 60 Hz. The normal duty drive overload current shall be 100% continuous, 110% for 1 minute, and 150% for 3 seconds. The heavy duty

drive overload current shall be 100% continuous, 150% for 1 minute, and 200% for 3 seconds.

Equipment	HP	Voltage	EnclosureType	Application	Duty Type
Recycle Pump P-1	30	480	12	Variable Torque	Normal
Recycle Pump P-2	30	480	12	Variable Torque	Normal

2. Horsepower ratings, application, and duty types listed above are subject to change based on final equipment selected and/or recommended by equipment supplier. Coordinate final motor horsepower ratings, application type, and duty types as required with equipment vendors.

H. Hardware:

1. The drive hardware employs the following power components:

   a. Diode or fully gated bridge on the input.

   b. AC line reactor on input for all ratings.

   c. Switching logic power supply operating from the DC bus.

   d. MOV protection available on Frame 9 only - phase to phase and phase to ground with ability to remove the phase to ground unit when applicable.

   e. Common Mode Capacitors available on all units. For use on ungrounded systems Frame 9 is orderable without and Frame 10 and higher removable by jumper.

   f. Gold plated plug-in connections on printed circuit boards.

   g. Microprocessor based inverter logic isolated from power circuits.

   h. Latest generation IGBT inverter section.

   i. Customer Interface common for all horsepower ratings. LCD digital display standard with choices for programming keypad and operator keys options.

   j. The Main Control Board is the same for all ratings to optimize spare parts stocking and exchange.

   k. Common control connection for all ratings.

   l. Optimized for 2kHz carrier frequency.

   m. Device Peripheral Interface (DPI) for connection to common options.

   n. Power LED viewable through the control box cover.

o. Status LEDs for communications status, including embedded DPI status, adapter health and communications network status, viewable at HIM mounting plate.

I. Control Logic:

1. The drive is programmable or self-adjusting for the following:

a. Operating the drive with motor disconnected.

b. Controlled shut down, when properly fused, with no component failure in the event of an output phase to phase or phase to ground short circuit and annunciation of the fault condition.

c. Adjustable PWM carrier frequency within a range of 1-6 kHz.

d. Selectable Sensorless Vector or V/Hz mode.

e. Suitable for use on both Normal Duty and Heavy Duty loads.

f. Multiple programmable stop modes including - Ramp, Coast, DC-Brake, Ramp-to-Hold and S-curve.

g. Multiple acceleration and deceleration rates.

h. All adjustments to be made with the door closed.

i. Adjustable output frequency up to 320Hz.

J. Terminal Blocks:

1. Separate terminal blocks are provided for control and power wiring. Power terminal blocks are rated a minimum of 90 °C and marked for both inputs and outputs (L1, L2, L3 and U/T1, V/T2, W/T3).

K. Power Conditioning:

1. The drive is designed to operate on an AC supply source that may contain line notching and up to 10% harmonic distortion. An input isolation transformer is not required for protection from normal line transients. If line conditions dictate the use of a transformer, the K factor should be 4.0 or less.

L. Operator Interface:

1. Interface to the drive is provided via a removable Human Interface Module (HIM) with integral display. This unit is a 7 line by 21-character backlit LCD display with graphics capability. It is used to display drive operating conditions, fault / alarm indications and programming information with full text support in multiple languages, including but not limited to English, German, French, Italian, Spanish, Portuguese and Dutch.

2. The keypads for these include programming keys, drive operating keys (Start, Stop, Direction, Jog and Speed Control), numeric keys for direct entry and an ALT (alternate function) key to allow some of the more common drive programming or operating functions to be accessed directly without knowledge of programming structure. These ALT functions include S.M.A.R.T. Start for fast and easy commissioning, View selection, Auto Manual operation, HIM removal under power, and device selection for programming.

M. Input/Output Capabilities (Control Interface):

1. Analog Inputs/Outputs:

a. Two (2) differential, +/-10V (bi-polar) / 20mA analog inputs, 11 bit plus sign, 160V common mode noise rejection. Both inputs shall be fully user programmable for a variety of uses including frequency command, process loop inputs, and others. Inputs are programmable for function, scaling, offset, signal loss detect and square root.

b. Two (2) single-ended +/-10V (bi-polar) / 20mA analog output, 11 bit plus sign. Both shall be fully user programmable to be proportional to one of 25 process parameters including output frequency, output current, encoder feedback, output power, and others. Programming is available to select either absolute or signed values of these parameters.

c. Input for motor protection thermistor (1.8k Ohm PTC). Drive will provide fault protection if temperature exceeds protection value

2. Digital Inputs/Outputs:

a. Six (6) digital inputs 24Vdc or 120Vac as shown. Inputs shall be configurable as sink or source. All inputs are individually programmable for functions from a list of 57 that include Start (3-wire control, Run(2-wire control), Stop, External fault, Speed select, Jog, Process PU functions, Level-sensitive Run, and others. 24V inputs draw 10mA each and require a 20V minimum for "ON" state and a maximum for 5V "OFF" state. 115Vac inputs draw 5mA each and require a 100V minimum for "ON" state and a maximum of 30V for "OFF" state.

b. One input shall able to be set by a jumper to be a Hardware Enable. In this state, no microprocessor control is involved with disabling the drive outputs.

c. Three (3) relay outputs, (1 form-C, 1 form-B, 1 form-A). Contact output ratings 240Vac/30Vdc, and require a 10mA minimum clearing current. Relays are programmable to 57 different

conditions. All outputs shall have timers that control the amount of time before an output changes state. All outputs shall have an on-delay and off-delay timers relative to the function assigned to the input.

N. Features:

1. Acceleration/Deceleration: Accel/Decel settings provide separate adjustments to allow either setting to be adjusted from 0.0 seconds to 3276.7 seconds. A second set of remotely selectable Accel/Decel settings is accessible through digital inputs. Programming capability allows the user to produce acc/dec profiles with linear or "S-Curve" characteristics that provide changing accel/decel rates. S-Curve profiles are adjustable.

2. Adjustments: The digital interface is used for all set-up, operation and adjustment settings. All adjustments are stored in nonvolatile memory (EEPROM). No potentiometer adjustments are used. The drive provides EEPROM memory for factory default values and user stored drive configurations.

3. Auto Economizer: This feature automatically reduces the output voltage when the drive is operating in an idle mode (drive output current less than programmed motor FLA). The voltage is reduced to minimize flux current in a lightly loaded motor thus reducing kW usage. If the load increases, the drive will automatically return to normal operation.

4. Auto / Manual Mode: The HIM can utilize the ALT function key to transfer the drive from Automatic mode to Manual mode and back. When in Auto mode, the drive receives its frequency command from the programmed source. When in Manual mode, control of the frequency command is transferred to the HIM speed control keys (or potentiometer). The user has the choice of preloading the HIM with the current "auto" frequency reference before transferring control to allow for smooth transitions without speed "jumps".

5. Auto Restart: The drive provides up to nine automatic fault reset and restarts following a fault condition before locking out and requiring manual restart. The automatic mode is not applicable to a ground fault, shorted output faults and other internal microprocessor faults. The time between restarts is adjustable from 0.5 seconds to 30.0 seconds.

6. Bus Regulation: DC Bus regulation is available to reduce the possibility of drive overvoltage trips due to regenerative conditions. The drive's reaction to a Bus voltage increase is programmable to one of 4 options.

7. Communications Interface: The drive has the capability for either internally mounted or externally mounted communications interface cards.

Internal cards use drive power and can operate at higher speeds. Externally mounted cards are separately powered and connected to the drive via a cable.

8. Control Mode: Programming provides the ability to select either Sensorless Vector or V / Hz mode. The sensorless vector mode uses motor nameplate data plus motor operating data such as IR drop, nominal flux current and flux up time to tune the motor / drive for optimum torque performance. The volts per hertz mode can be programmed straight line, pre programmed fan curve or full custom patterns.

9. Current Limit: Programmable current limit from .1 amps to 150% of drive rated amps. Current limit is active for all drive states; accelerating, constant speed and decelerating. Both the source of the current limit value and the gain for responsiveness adjustment are programmable. The drive employs PI regulation with an adjustable gain for smooth transition in and out of current limit.

10. Fault Memory: The last eight fault codes with respective times are stored in the fault buffer. In addition, information about the drive's condition at the time of the last fault such as operating frequency, output current, dc bus voltage and 28 other status conditions are stored at the time of fault. Information is maintained in the event of a power loss. A power up marker is also provided at each power up time to aid in analyzing fault data. The last eight alarm codes are also stored, without time stamp for additional troubleshooting reference.

11. Flying Start: The drive is capable of determining the speed and direction of a spinning motor and adjusts its output to "pick-up" the motor at the rotating speed.

12. Inertia Ride Through: The drive can respond to a loss of AC input power by adjusting the output frequency to create a regenerative situation in the motor. This regenerated energy recaptures the mechanical energy and converts it to electrical energy to power the drive logic during the power outage. This allows the drive to retain control of the motor during the power outage. Performance is based on the amount of system inertia and the length of the outage. The bus voltage level required to trigger inertia ride through is adjustable. Inertia Ride Through can be enabled or disable via programming.

13. Memory Storage: The drive stores the factory default settings in non-volatile memory (EEPROM) so that the user can return the drive to a known state. Additional memory storage locations in the drive, known as User Sets can also be stored in the drive's non-volatile memory. Three User Set locations are offered. The user can name the sets per the process

/ application and recall the configuration to active drive memory as needed.

14. Motor Overload Protection: The drive will provide Class 10 motor overload protection investigated by UL to comply with N.E.C. Article 430. Overload protection is speed sensitive and adjustable. To accommodate a variety of motors with different speed range capabilities, the frequency at which the overload begins to derate is programmable. A parameter is available to directly read the level of accumulated overload.

15. Process PI Control: The internal process PI regulator has proportional and integral gain adjustments as well as error inversion and output clamping functions. The feedback can be configured for normal or square root functions. If the feedback indicates that the process is moving away from the setpoint, the regulator will adjust the drive output until the feedback equals the reference. Process control can be enabled or disabled with a hardwired input. Transitioning in and out of process control can be tuned for faster response by preloading the integrator. Protection is provided for a loss of feedback or reference signal. A signal can also be provided to indicate that excess error exists.

16. Ride Through: The control logic is capable of "riding through" a power outage of at least 2 seconds in duration. The inverter section is shut off after a 28% drop in bus voltage to conserve power for the drive logic. The ride through method and trigger point are adjustable by the user.

O. VFD Enclosures:

1. VFDs shall be provided as Packaged/Configured Drives.

   Unit shall be wall or floor mountable and be NEMA type as indicated in the VFD Table located in 2.01G1 of this section. Unit shall be provided with lockable Main Input Fused Disconnect.

2. The enclosures shall be provided with an input Line Reactor with an Impedance rating of 3% for voltage transient protection, and for a degree of protection from harmonic distortion.

3. The VFD enclosures for the larger 100hp drives shall be provided with an integral Harmonic Filter in lieu of a line reactor as specified below.

4. Units shall be provided with door mounted HAND/OFF/AUTO selector switch. The HAND Mode shall provide a local start control. In the AUTO Mode, the start control shall be provided via a remote contact in the SCADA control panel. Provide an extra set of contacts on the selector switch to monitor the switch position via the facilities SCADA control panel.

5. Enclosure shall be provided with a door mounted Operator Interface as follows:

   a. Interface to the drive is provided via a removable Human Interface Module (HIM) with integral display. This unit is a 7 line by 21-character backlit LCD display with graphics capability. It is used to display drive operating conditions, fault / alarm indications and programming information with full text support in multiple languages, including but not limited to English, German, French, Italian, Spanish, Portuguese and Dutch.

   b. The keypads for these include programming keys, drive operating keys (Start, Stop, Direction, Jog and Speed Control), numeric keys for direct entry and an ALT (alternate function) key to allow some of the more common drive programming or operating functions to be accessed directly without knowledge of programming structure. These ALT functions include S.M.A.R.T. Start for fast and easy commissioning, View selection, Auto Manual operation, HIM removal under power, and device selection for programming.

P. Harmonic Filters:

1. Provide Harmonic Filters integral to the drives packages as specified herein.

2. The harmonic filter shall be a Matrix Filter as manufactured by MTE Corporation, General Electric, or approved equal. The filter shall be physically sized to meet all requirements as shown on the Contract Drawings, and be furnished within a panel rated appropriately for the environment being installed.

3. The harmonic filter shall treat all characteristic low frequency harmonics generated by a three phase full wave converter load (5th, 7th, 11th, 13th, etc.).

4. The characteristic harmonics shall be suppressed without need for individual tuning or the requirement to phase shift against other harmonic sources.

5. The harmonic filter shall be a passive series connected low pass filter consisting of an inductor capacitor network. Active electronic components shall not be used.

6. The harmonic filter model supplied shall be capable of feeding a three phase input rectifier with or without line reactors, with or without a DC link choke, with or without a combination line reactor and DC link choke.

7. The harmonic filter shall not resonate with the power distribution system, nor attract harmonics from other sources.

8. The filter shall be suitable for use with either a single nonlinear load or multiple nonlinear loads.

9. The filter shall be listed per UL-508.

10. In the operating range from full load to half load the power factor shall be .98 lagging to .95 leading.

11. The harmonic filter in combination with the variable frequency drive shall meet all requirements specified in IEEE 519 for individual and total harmonic voltage and current distortion. The PCC for all voltage and current harmonic calculations and measurements shall be the input terminals of the harmonic filter.

12. Total Demand Distortion (TDD) of the current at the input terminals of the harmonic filter shall not exceed the limits defined in Table 10-3 of IEEE 519.

13. Total Harmonic Voltage Distortion (THVD) shall meet the requirements of Table 10-2 of IEEE-519. The harmonic filter supplier shall not be responsible for pre-existing voltage distortion caused by other harmonic sources.

14. The harmonic filter shall suppress the characteristic harmonics to the levels specified in paragraph " K" provided that the line voltage unbalance is between 0% and 1%. If the line voltage unbalance is between 1% and 3% per ANSI C84.1-1995 the total harmonic input current distortion at any reduced load or speed condition shall not exceed the full load THID by more than 50% (i.e. if 5% THID required at full load, then not more than 7.5% THID at reduced load when voltage unbalance is more than or equal to 1% and less than or equal to 3%)

15. The full load efficiency of the harmonic filter shall be greater than 98%.

16. When fed from a power distribution system operating at the nominal distribution voltage, the harmonic filter output voltage at no load shall not be more than 4.6% of the nominal RMS and peak distribution voltage.

17. When fed from a power distribution system operating at the nominal distribution voltage, the harmonic filter output voltage at full load shall not be less than the nominal RMS utilization voltage.

18. All wiring shall be copper.

19. At no load the harmonic filter shall not cause the voltage at the PCC to rise by more than 2%.

20. To assure that the voltage source PWM inverters do not experience over voltage trips, the harmonic filter shall not cause the inverter bus voltage to increase by more than 5% when the filter is operating from the nominal distribution voltage.

21. To assure that the filter will not reduce the life of a voltage source inverters bus capacitor, the output current waveform of the harmonic filter and the input current waveform of the inverter shall be consistent with the input waveform of an inverter fed from a drive equipped with a 3% minimum impedance line reactor.

22. The harmonic filter shall be furnished will an integral output contactor. The output contactor shall have a 120Vac coil, and be energized upon the startup of the associated VFD.

23. The harmonic filter shall be handled, stored, and installed in accordance with the manufacturer's recommended installation practices as found in the manufacturer's User Manual. Installation shall comply with all applicable local codes.

24. To assure quality control and proper performance, the filter shall be manufactured by an ISO9001:2000 supplier in the supplier's own manufacturing facility, and not by a contract manufacturer. Filters shall be fully tested prior to shipment.

25. The harmonic filter shall be warranted to be free of defects in materials and workmanship for a period of one year from the date of shipment when applied in accordance with the manufacturer's recommended installation procedures.

PART 3 – EXECUTION

3.01 INSTALLATION

A. Examine areas and conditions under which VFDs are to be installed, and notify the Engineer in writing of conditions detrimental to proper completion of the Work. Do not proceed with the Work until unsatisfactory conditions have been corrected in a manner acceptable to the Engineer.

B. Per NEMA ICS 3.1, install equipment in accordance with the approved manufacturer's printed installation drawings, instructions, wiring diagrams, and as indicated on project drawings and the approved shop drawings. A field representative of the VFD manufacturer shall supervise the installation of all equipment, and wiring.

C. Certified factory start-up shall be provided for each VFD provided. Service engineers shall be employed by the manufacturer or be certified by the manufacturer and provide start-up services including physical inspection of drive and connected wiring and final adjustments to meet specified performance requirements.

D. Make equipment grounding connections for each VFD in accordance with all applicable codes and as recommended by the manufacturer.

E. Tighten connectors and terminals, including screws and bolts, in accordance with equipment manufacturer's published torque tightening values for equipment connectors. Where manufacturer's torquing requirements are not indicated, tighten connectors and terminals to comply with tightening torques specified in UL Standards 486A and B, and the MEC.

F. Wall-mount the enclosures using spacers or standoffs (1/4 inch minimum).

G. The VFD's shall be warranted by the manufacturer for a period of one year, or the contracted period of any extended warrantee agreed upon by the Owner, after successful completion of the acceptance test. Any component failing to perform its function as specified and documented shall be repaired or replaced by the Contractor at no additional cost to the Owner.

3.02 FIELD QUALITY CONTROL

A. Prior to energizing motor controller equipment, check with ground resistance tester, phase-to-phase and phase-to-ground insulation resistance levels to ensure requirements are fulfilled.

B. Prior to energizing, check circuitry for electrical continuity, and for short circuits.

END OF SECTION

This page intentionally left blank

SECTION 31 00 00

EARTHWORK

PART 1 – GENERAL

1.01 SUMMARY

A. Section Includes

1. Provide excavating, filling, backfilling, stockpiling, bedding, compacting, grading, protection, installation and removal of support of excavation and other Work necessary for the construction of pipelines, structures, pavements, and appurtenant Work in accordance with this Section, the Drawings and applicable reference standards listed in Article 1.03.

2. Provide all labor, materials, tools, equipment, accessories, and appurtenances to satisfactorily complete all excavating, removal and disposal of alum based surface water treatment plant residuals from Lagoons 1, 2, and 3.

3. Provide rip rap as shown on the Drawings.

4. Provide civil work required for electrical.

B. Related Requirements

1. 31 10 00 Site Clearing

2. 32 12 16 Asphalt Paving

3. 32 90 00 Planting

1.02 PRICE AND PAYMENT PROCEDURES

A. Measurement and payment requirements: per Division 01 General Requirements.

1.03 REFERENCES

A. Reference Standards

1. MassDOT Standard Specifications and Supplements, except for Compensation sections

2. ASTM D1557: Standard Test Methods for Laboratory Compaction Characteristics of Soil Using Modified Effort

3. ASTM D6938 Standard Test Method for In-Place Density and Water Content of Soil and Soil-Aggregate by Nuclear Methods (Shallow Depth)

1.04 ADMINISTRATIVE REQUIREMENTS

A. Coordination, Sequencing, and Scheduling: per Division 01 General Requirements.

1.05 SUBMITTALS

A. Submit in accordance with Division 01 General Requirements.

B. Product Data

C. Sample Test Reports and Evaluations

1. Materials gradations

2. Backfill moisture-density relationships

D. Source and Field Quality Control Submittals

E. Closeout and Maintenance Material Submittals: per Division 01 General Requirements.

1.06 QUALITY ASSURANCE

A. Provide in accordance with Division 01 General Requirements.

1.07 DELIVERY, STORAGE, AND HANDLING

A. Provide in accordance with Division 01 General Requirements.

B. Waste Management and Disposal

1. Legally dispose of excess or unsuitable material at no additional cost to Owner.

1.08 SITE CONDITIONS

A. Existing Conditions: per Division 01 General Requirements.

PART 2 – PRODUCTS

2.01 MATERIALS

A. Pipe and Structure Bedding: 3/4 inch sized crushed stone; durable, clean angular rock fragments obtained by breaking and crushing rock material meeting the criteria of the M2.01.4 of the MassDOT Standard Specifications and Supplements for bedding beneath pipe and structures, to 6 inches above the crown of the pipe:

Sieve analysis by weight:

Sieve Size (inches)	Percent Passing by Weight
1	100
3/4	95-100
1/2	35- 70
3/8	0- 25

B. Suitable Backfill: well-graded granular material, of which at least 25 percent by weight shall be retained on the #40 sieve and contain less than 35 percent finer than a #200 sieve by weight, predominantly free from organic matter, man-made materials, ice, snow or other deleterious material and have characteristics so it can be readily placed and compacted. Place 6 inches above the crown of the pipe and around structures 6 inches above the crown of the highest pipe and up to the underside of the pavement section.

C. Structural Fill: gravel material, for structure backfill per M1.03.1 Type b of the MassDOT Standard Specifications and Supplements, consisting of inert material that is hard, durable stone and coarse sand, free from loam and clay, surface coatings and deleterious materials having suitable moisture content to allow for proper compaction as specified in Paragraph 3.08 of this Section. Unsuitable structural fill: soil that is too wet for proper compaction.

Gradation:

Sieve Size	Percent Passing by Weight
3 inch	100
1/2 inch	50 - 85
#4	40 - 75
#50	8 - 28
#200	0- 10

D. Gravel Borrow: processed gravel for backfill per M1.03.1 of the MassDOT Standard Specifications and Supplements, consisting of inert material that is hard, durable stone and coarse sand, free from loam and clay, surface coatings and deleterious materials. Coarse aggregate percentage of wear: not more than 50 by the Los Angeles Abrasion Test.

Gradation:

Sieve Size	Percent Passing by Weight
3 inch	100
1-1/2 inch	70-100
3/4 inch	50-85
#4	30-60
#200	0-10

E. Sand: Sieve analysis by weight:

Sieve Size	Percent Passing by Weight
3/8-inch	100
#4	95-100
#16	50-85
#100	2-10

F. Washed Sand: clean, medium aggregate sand.

1. Sieve analysis by weight:

Sieve Size	Percent Passing by Weight
3/8-inch	100
#4	95-100
#16	50-85
#30	25-60
#50	5-30
#100	0-10
#200	-

G. 3/4 Inch Crushed Stone: Durable crushed rock or crushed gravel stone; crushed stone per M2.01.4 of the MassDOT Standard Specifications and Supplements, free of ice, snow, sand, silt, clay, loam, shale, or other deleterious matter; graded within the following limits:

Sieve Size	Percent Passing by Weight
1 inch	100
3/4 inch	90 - 100
1/2 inch	10 - 50
3/8 inch	0 - 20
#4	0 - 5

H. Drainage Stone: 1-1/2" crushed stone per M2.01.1 of the MassDOT Standard Specifications and Supplements consisting of durable, clean angular rock fragments obtained by breaking and crushing rock material:

Sieve Size	Percent Passing by Weight
2 inch	100
1-1/2 inch	95 - 100
1 inch	35 - 70
3/4 inch	0 - 25

I. Controlled Density Fill (CDF) (Flowable Fill): excavatable and used to limit settlement, lateral movement, undermining, washout and other hazards created by earthwork operation as shown on the Drawings and when excavating around structures, utilities, sidewalks, pavements, and other facilities. Batch CDF at concrete plant.

1. Portland Cement: AASHTO M85.

2. Fly Ash: AASHTO M4.05.02.

3. Sand: M4.02.02 of MassDOT Standard Specifications and Supplements.

4. Water: M4.02.04 of MassDOT Standard Specifications and Supplements.

5. Air Entraining Admixture: M4.02.05 of MassDOT Standard Specifications and Supplements.

6. Compressive Strength: 28 day = 30-80 psi, 90 day = 100 psi

7. Slump: 10 - 12 inches

J. Rip Rap: Riprap stone shall be sound, durable rock which will not disintegrate due to exposure to water or weather, and angular in shape such as rough, unhewn quarry stone or fragments obtained by blasting, breaking or crushing natural rock. Rounded boulders or cobbles shall not be permitted. Flat, platy stones and shale or slate rock with its largest length dimension three times greater than its shortest dimension shall not be permitted.

Riprap Gradation: Stone size shall correspond to the inch dimension indicated on Drawings. The D_{50} of the stone size represents 50% of the stone passing the D_{50} dimension sieve screen. The D_{20} of stone size, 20% passing, shall be one half the D_{50} dimension. The maximum size limit, D_{100}, shall be twice the D_{50} stone size dimension.

1. D_{20} = 20% passing 1/2 D_{50} dimension sieve

2. D_{50} = 50% passing D_{50} dimension sieve

3. D_{100} = 100% passing 2 D_{50} dimension sieve

K. Unsuitable materials: material containing excessive clay, vegetation, organic matter, debris, pavement, stones or boulders over 6-inches in greatest dimension, and frozen material and will not provide a suitable foundation or structural support for the pipe or material unsuitable for use in backfill.

2.02 SHORING AND BRACING MATERIALS

A. Provide suitable shoring and bracing materials to support loads imposed. Materials may be used and in serviceable condition and are subject to inspection and approval of the Engineer once delivered to the Site

2.03 SOURCE QUALITY CONTROL

A. Provide in accordance with Division 01 General Requirements.

PART 3 – EXECUTION

3.01 EXAMINATION

A. Verification of Conditions

1. Before starting Work, check and verify governing dimensions and elevations. Survey condition of adjoining properties with Engineer. Take digital video recording any prior settlement or cracking of structures, pavements and other improvements. Prepare a list of such damages, verified by and signed by Contractor, Engineer, and others conducting the investigation.

2. Coordinate survey. Establish exact elevations at fixed points to act as benchmarks. Clearly identify benchmarks and record existing elevations. Locate datum level used to establish benchmark elevations sufficiently distant so as not to be affected by excavation operations.

3.02 FIELD QUALITY CONTROL

A. Provide in accordance with Division 01 General Requirements.

B. Site/Field Tests and Inspections

1. During excavation, resurvey benchmarks weekly, employing licensed Land Surveyor or registered Professional Engineer. Maintain accurate log of surveyed elevations for comparison with original elevations. Notify Engineer if changes in elevations occur or if cracks, sags or other damage is evident.

3.03 EXCAVATION

A. Remove materials encountered to the limits shown on the Drawings, designated in the Specifications or as required by the Owner.

1. Do not perform excavation below normal grade to remove and replace unsuitable materials until approved by the Engineer.

2. Do not perform excavation of rock, boulder or unsuitable materials until material to be excavated has been cross-sectioned and classified by Engineer.

B. Earth Excavation: removal and disposal of pavements, curbing and other obstructions visible on ground surface, underground structures and utilities indicated to be demolished and removed, and other materials encountered that are not classified as rock excavation or unauthorized excavation. Legally dispose of surplus materials resulting from excavation and not needed for use on the Project, as determined by the Engineer. Obtain necessary permits legal disposal of surplus material.

C. Excavation in Asphalt Pavement Areas

1. Saw cut or mill to full depth through existing pavement prior to any excavation for pipe or structure placement. Minimize disturbance of remaining pavement. Cut and remove the minimum amount of pavement required to do the Work.

2. Use shoring and bracing where sides of excavation will not stand without undermining pavement.

3. Keep material and soil stockpiles a minimum 10 feet back from the edge of excavation, or in accordance with the approved support of excavation design, to avoid overloading of the sides of excavation and prevent slides or cave-ins.

4. Remove and dispose of existing pavements in the course of the Work. Take care to avoid mixing existing pavement material with excavation material to be used for backfill.

D. Excavation for Trenches

1. Excavate to widths shown on the Drawings.

2. Produce an evenly graded flat trench bottom at the subgrade elevation required for installation of pipe and bedding material.

3. Load excavated material directly into trucks unless otherwise permitted by the Engineer.

4. Place backfill material directly into trench or excavation. Do not stockpile material to be used as backfill in traffic areas.

E. Unauthorized Excavation: removal of materials beyond indicated subgrade elevations or dimensions without specific direction of Engineer. Unauthorized excavation, as well as remedial Work directed by Engineer including refilling, is at no additional cost to Owner.

1. Refilling Unauthorized Excavation

a. Trenches: Use 3/4-inch crushed stone and stabilization fabric as a separator material, if necessary, as directed by Engineer.

b. Elsewhere: Backfill and compact unauthorized excavations as specified for authorized excavations of same classification, unless otherwise directed by Engineer.

F. Excavation Below Normal Grade: When excavation has reached required subgrade elevations, notify Engineer who will make an inspection of conditions. If unsuitable bearing materials, as defined in Paragraph 2.01 above, are encountered at required subgrade elevations, carry excavations deeper as directed by Engineer and replace excavated material with crushed stone or as directed by the Engineer.

G. Excavation Above Normal Grade: If unsuitable materials, as defined in Paragraph 2.01 above, are encountered above normal grade, remove the unsuitable material and dispose of and do not use as backfill on any portion of the Project, unless otherwise approved by the Engineer. Use suitable stockpiled material approved by the Engineer, to replace the unsuitable material to backfill the trench to the dimensions for pipe and structure bedding and backfill as shown on the Drawings.

If suitable stockpile material is not sufficient to backfill the trench to required dimensions, use gravel borrow to complete the trench backfill to the elevation shown for pipe and structure backfill. Furnish and install stockpiled material and gravel borrow at no additional cost to Owner.

H. Material Storage

1. Stockpile and maintain suitable surplus excavated materials for re-use as backfill anywhere within the Project limits as directed by the Engineer. Place, grade, and shape stockpiles for proper drainage. Cover stockpiles when unused to limit infiltration by precipitation.

2. Provide erosion controls around stockpile areas as required by the local Conservation Agent and/or the Engineer at no additional cost to Owner.

3. Locate and retain soil materials at least 10 feet away from edge of excavations or as allowed approved support of excavation design.

4. Residual solids shall be held within a suitable water-tight structure to prevent contamination of surrounding areas outside the limits of the lagoons.

I. Field Quality Control

1. Provide in accordance with Division 01 General Requirements.

3.04 ROCK REMOVAL

A. General

1. Notify Engineer immediately of change in classification. Should bedrock be encountered above the trench bottom grade or above the subgrade elevation, expose the bedrock surface and to allow the Engineer to perform the necessary elevation survey and take cross-sectional measurements.

2. Perform Rock Excavation by mechanical methods.

3. Boulders: Remove or partially remove boulders exposed on the sides of or in the bottom of excavations as directed by the Engineer. Remove boulders to not less than 2 feet outside structure walls, not less than 12 inches outside footings, not less than 6 inches below underslab subgrade, not less than the lateral trench width payment lines indicated, and not less than 12 inches below the underside of pipes. Depressions resulting from the removal of boulders and rock shall be refilled with approved compacted bedding. Bedding for refilling will not be paid for separately.

4. Refill unauthorized rock excavations, or excavations made beyond or below the indicated or directed excavation pay limits, with compacted bedding at no additional cost.

5. Remove and dispose of unused rock and boulders off-site.

6. Remove, transport and dispose of all residual solids encountered to the limits shown on the Drawings, or designated in the Specifications, or as needed to complete the project, in a method approved by Local, State and Federal regulatory agencies.

3.05 SHORING AND BRACING

A. Provide in accordance with Division 01 General Requirements.

B. General

1. Provide temporary sheeting, shoring, and bracing in locations where required to protect excavated areas as required for safety or compliance with OSHA and Laws and Regulations per Section 00 73 19, at no additional cost to the Owner. If the Engineer is of the opinion that at any point sufficient or proper supports have not been provided, additional supports may be ordered to be placed at no additional cost to the Owner. Compliance with such order shall not relieve the Contractor from responsibility for the sufficiency of such supports.

2. In no case should slope height, slope inclination, or excavation depth, including utility trench excavation depth, exceed those specified in Laws and Regulations per Section 00 73 19. As a minimum, follow the current OSHA Health and Safety Standards for Excavations, 29 CFR Part 1926.

3. Provide system to resist earth and hydrostatic pressures, including surcharges from surface loads.

4. Maintain shoring and bracing while excavation is open.

5. If not leaving in place, remove systems in stages to prevent disturbance of soils and damage to structures and improvements. Fill voids as soon as sheeting is withdrawn.

C. Provide shoring and bracing designed by a Massachusetts Registered Professional Engineer to protect existing buildings, utilities, and other improvements and excavation against movement due to caving and to meet safety requirements of OSHA and Laws and Regulations per Section 00 73 19 for shoring and bracing.

1. Wood Sheeting and Bracing: used as needed to make excavation safe and secure. Leave wood sheeting in place.

2. Steel Sheet Piling: to be removed following completion of Work or remain in place when directed by the Engineer. Drive sheet piling prior to excavation where possible. Fill and compact voids outside sheeting to hold sides of excavation in place.

   Steel sheet piling may be left in place at the Contractor's option if approved by the Engineer and at no additional cost to the Owner. Cut off sheet piling to be left in place at least 5 feet below finish grade or less if directed by the Engineer.

3. Movable box: used where a shoring system is required but steel piling is not called for as determined by Contractor as not all areas of Work will be conducive to the use of a movable box.

D. Field Quality Control

1. Provide in accordance with Division 01 General Requirements.

3.06 DEWATERING

A. Provide in accordance with Division 01 General Requirements.

3.07 BACKFILL AND FILL

A. Do not backfill excavations and trenches until new utilities have been inspected and, if required, tested satisfactorily for conformance with the Drawings and Specifications unless directed otherwise by the Engineer. Place acceptable soil material in layers to required elevations as shown on the Drawings or as specified. Fill, backfill, and compact in accordance with this Section to produce minimum subsequent settlement of the material and provide adequate support for the surface treatment or structure to be placed on the material. Place material in approximately horizontal layers beginning at lowest area to be filled. Do not impair drainage. Replace fill that becomes frozen or saturated in stockpiles with suitable off-Site fill at no additional cost to Owner.

B. Ground Surface Preparation

1. Remove asphalt and concrete pavements, granular base course, existing sandy and gravelly fills, existing organic silty/clay soils, organic peat, vegetation, debris, unsatisfactory soil materials, obstructions, and deleterious materials from ground surface to excavation subgrade prior to placement of fills. Scarify surfaces so that fill material will bond with existing surface.

2. When existing ground surface has a density less than that specified under Article 3.07, Compaction, for particular area classification, break up ground surface, pulverize, moisture-condition to optimum moisture

content, and compact to required depth and percentage of maximum density.

C. Placement

1. Place backfill and fill materials in layers not more than 6 inches in loose depth for material compacted by heavy compaction equipment or hand-operated tampers. Do not place backfill or fill material on surfaces that are muddy, frozen, or contain frost or ice.

2. Place backfill and fill materials evenly adjacent to structures, to required elevations. Take care to prevent wedging action of backfill against structures by carrying material uniformly around structure to approximately same elevation in each lift.

3. Do not allow heavy machinery within 5 feet of structure during backfilling and compacting.

D. Backfilling Excavations

1. Backfill excavations promptly as Work permits, but not until completion of the following:

   a. Inspection and recording locations of underground utilities

   b. Removal of concrete formwork

   c. Removal of shoring and bracing, and backfilling of voids with satisfactory materials

   d. Removal of trash and debris

2. Use care in backfilling to avoid damage or displacement of underground structures and pipe.

3. Backfill under existing utility pipes crossed by new utility pipes with CDF. The CDF will extend continuously from the bedding of the new pipe to the utility pipe crossed, including a 6-inch thick envelope of CDF around the existing utility pipes.

4. Backfill with CDF when clearance between proposed structure and existing structure is 18 inches or less and sufficient clearance is not provided to obtain suitable compaction, in the opinion of the Engineer.

5. Backfill with CDF for trenches within impervious surfaces with pipes containing less than 3 feet of cover.

6. Provide that 3/4 inch crushed stone backfill stands at its own angle of repose. "Haunching" or "forming" with common fill is not allowed.

E. Backfilling Trenches

1. See Trench Detail on the Drawings.

2. Place pipe and structure bedding and gravel bedding to the extent and dimensions shown on the Drawings so that the pipes and structures have complete and uniform bearing.

3. Grade, compact and shape pipe and structure bedding so that the full length of pipe barrel has complete and uniform bearing. Dig bell holes and depressions for joints after the bedding has been graded and compacted, at proper clearance for jointing the pipes.

4. Following inspection and approval of pipe installation by Engineer, carefully hand place and properly compact additional approved bedding to the limits shown on the Drawings. Hand or mechanical tamping on the sides of the pipe.

5. Place 6 inches of suitable backfill in trenches above the crown of pipe as approved, not frozen and without stones larger than 3 inches in the greatest dimension. Spread in layers not exceeding 6 inches in loose thickness and compact each layer by at least 4 passes with an approved vibratory compactor. See Article 3.07 for compaction types and standards. Carefully place trench backfilling to avoid disturbance of new Work and of existing structures. Adjust moisture content of backfill to allow for proper compaction.

6. Bed pipe in pipe and structure bedding (3/4-inch crushed stone except where otherwise indicated. Limits of bedding and requirements for remaining trench backfill are shown on the Drawings.

7. Trenches in cross-country runs: Restore surface to that existing prior to construction, as shown on the Drawings, or required by the Engineer. Mound trench 6 inches above existing grade or as required by the Engineer.

F. Field Quality Control

1. Provide in accordance with Division 01 General Requirements.

3.08 COMPACTION

A. Use methods which produce the required degree of compaction throughout the entire depth of material placed without damage to new or existing facilities and which are approved by the Engineer. Adjust moisture content of soil as required. Remove and replace material which is too wet to compact to required density. Compact each layer as Work progresses.

Compaction Method	Maximum Stone Size	Maximum Loose Lift Thickness		Minimum Number of Passes	
		Below Pavement	Less Critical Areas	Below Pavement	Less Critical Areas
Hand-operated vibratory plate or light roller in confined areas	4 inches	6 inches	8	4	4
Hand-operated vibratory drum rollers weighing at least 1,000 lbs. in confined areas	6 inches	10 inches	12 inches	4	4
Light vibratory drum roller min. weight at drum 5,000 lbs., min. dynapac force 10,000 lbs.	8 inches	6 inches	18 inches	4	4
Medium vibratory drum roller min. weight at drum 10,000 lbs., min. dynapac force 20,000 lbs.	8 inches	6 inches	24 inches	6	6

B. Degree of Compaction (minimum densities):

Fill and Backfill Location	Density
Top 3 feet under pavement grade	95% of max.
Below top 3 feet under pavement grade	92% of max.
Pipe Bedding	92% of max.
Beside structure foundation walls	95% of max.
Maximum density:	ASTM D698, modified
Field density tests	ASTM D1556 (sand cone) or ASTM D6938 (nuclear methods)

Note: Fill that is too wet for proper compaction shall be disked, harrowed, or otherwise dried to proper moisture content for compaction to the required density. If the fill material cannot be dried within 48 hours of placement, remove and replace with drier fill.

C. Field Quality Control

1. Provide in accordance with Division 01 General Requirements.

2. Testing

   a. Determine actual in place densities using field tests as directed by the Engineer and in accordance with Division 01 General Requirements.

   b. Perform additional Work to obtain proper compaction if in-place densities do not meet the specified densities. Retesting may be required by the Engineer.

3. Minimum Number of Tests

   a. Suitable Backfill: Compact backfill in maximum loose lifts per table above. For each lift make one field density test every 50 linear feet.

   b. Pavement Sub base: Make at least one field density test of sub base for every 50 linear feet of paved area.

3.09 GRADING

A. Uniformly grade areas within limits of grading under this section, including adjacent transition areas. Smooth finished surface within specified tolerances, compact with uniform levels or slopes between points where elevations are shown, or between such points and existing grades.

B. Grade areas adjacent to structure lines to drain away from structures and to prevent ponding.

C. Finish surfaces: free from irregular surface changes and as follows.

   1. Lawn or Other Unpaved Areas: Finish areas to receive topsoil to within not more than 0.10 feet above or below required subgrade elevations.

   2. Pavements: Shape surface of areas under pavement to line, grade and cross-section, with finish surface not more than plus or minus 1 inch above or below required subgrade elevation.

D. Compaction: After grading, compact subgrade surfaces to the percentage of maximum density for each area classification.

3.10 RIP RAP

A. Place riprap to full depth of $1.5D_{50}$ in one operation without special handwork, measured perpendicular to the face of the slope to obtain a uniform appearance true to line and grade. Place larger stones at bottom of slope. Place stones in close contact, with interlocking of face stones and backing stones. Fill openings between stones with smaller stones. Loose stones or excessively large stones

tending to project above the average general surface shall be embedded, re-oriented, or discarded.

3.11 DISPOSAL OF EXCESS MATERIALS

A. Legally dispose of excess or unsuitable material at no additional cost to Owner.

3.12 CLOSEOUT ACTIVITIES

A. Provide in accordance with Division 01 General Requirements.

3.13 MAINTENANCE

A. Protect newly graded areas from traffic and erosion. Keep free of trash and debris. Repair and re-establish grades in settled, eroded, and rutted areas to specified tolerances.

B. Where completed compacted areas are disturbed by subsequent construction operations or adverse weather, scarify surface, re-shape, and compact to required density prior to further construction. Immediately repair any subsequent settling and provide such maintenance for the remainder of the Contract at no additional expense to the Owner.

C. Prior to paving upon the sub-grade, remove soft or unsuitable material and replace with suitable backfill material. Bring low sections, holes, or depressions to the required grade with approved material. Shape entire sub-grade to line, grade, and cross section and thoroughly compact.

D. Provide erosion control measures in accordance with Laws and Regulations and in accordance with Division 01 General Requirements. Keep roads free of debris. Use suitable watertight vehicles for hauling wet materials over roads and streets. Clean up materials dropped from or spread by vehicles promptly or when directed by the Engineer.

END OF SECTION

SECTION 31 05 19

GEOTEXTILE FABRICS

PART 1 – GENERAL

1.01 SUMMARY

A. Section Includes

1. Provide all labor, equipment, supervision, materials, and quality control necessary to install geotextile fabrics as shown on the Drawings.

B. Related Requirements

1. Section 31 00 00 - Earthwork

1.02 PRICE AND PAYMENT PROCEDURES

A. Measurement and payment requirements: per Division 01 General Requirements.

1.03 REFERENCES

A. Reference Standards

1. ASTM D4873 – Standard Guide for Identification, Storage, and Handling of Geosynthetic Rolls and Samples
2. ASTM D4632 – Standard Test Method for Grab Breaking Load and Elongation of Geotextiles
3. ASTM D4533 – Standard Test Method for Trapezoid Tearing Strength of Geotextiles
4. ASTM D6241 – Standard Test Method for the Static Puncture Strength of Geotextiles and Geotextile Related Products Using a 50 mm Probe
5. ASTM D4751 – Standard Test Method for Determining Apparent Opening Size of a Geotextile
6. ASTM D4491 – Standard Test Methods for Water Permeability of Geotextiles by Permittivity

1.04 ADMINISTRATIVE REQUIREMENTS

A. Coordination, Sequencing, and Scheduling: per Division 01 General Requirements.

1.05 SUBMITTALS

A. Submit in accordance with Division 01 General Requirements.

B. Product Data

1. Submit the manufacturer's product specifications and a sample swatch of the fabrics.

C. Manufacturer Instructions

1. Handling and Installation Instructions: Submit manufacturer's instructions pertaining to storage, handling, and installation of geotextile fabric.

D. Closeout and Maintenance Material Submittals: per Division 01 General Requirements.

1.06 QUALITY ASSURANCE

A. Provide in accordance with Division 01 General Requirements.

B. Qualifications: per Division 01 General Requirements and as follows.

1. Geotextile Manufacturer: The geotextile manufacturer shall be a well-established firm with more than two years' experience in the manufacturer of geotextile fabrics.

1.07 DELIVERY, STORAGE, AND HANDLING

A. Provide in accordance with Division 01 General Requirements.

B. Packing, Shipping, Handling, and Unloading

1. Geotextile materials shall be delivered and stored in a protective wrapping which shall protect the materials from UV radiation and other mediums that may reduce the physical properties of the material. Labeling, packaging, and handling shall conform to ASTM D4873.

2. Handling including unloading, stockpiling, storage and protection of the geotextiles on-site shall be the responsibility of the Contractor. The geotextiles shall be stored off the ground and out of direct sunlight, and shall be protected from mud, dirt, dust and moisture. Any additional storage procedures recommended by the manufacturer shall be the Contractor's responsibility.

1.08 SITE CONDITIONS

A. Existing Conditions: per Division 01 General Requirements.

PART 2 – PRODUCTS

2.01 GEOTEXTILES

A. Performance/Design Criteria

1. Materials with "minimum average roll values" (MARV) that meet or exceed the criteria specified in table provided in this specification section.

NON-WOVEN GEOTEXTILE

PROPERTY	TEST METHOD	STANDARD	SPECIFIED VALUE
Material			
Grab Strength	ASTM D4632	MARV	250 lbs.
Grab Elongation	ASTM D4632	MARV	50%
Tear Strength	ASTM D4533	MARV	100 lbs.
Puncture Resistance	ASTM D6241	MARV	700 lbs.
AOS	ASTM D4751		0.15 mm
Permittivity	ASTM D4491	MARV	0.8 sec-1

WOVEN GEOTEXTILE

PROPERTY	TEST METHOD	STANDARD	SPECIFIED VALUE
Material			Polyproplyene
Grab Strength	ASTM D4632	MARV	200 lbs.
Grab Elongation	ASTM D4632	MARV	15%
Tear Strength	ASTM D4533	MARV	75 lbs.
Puncture Resistance	ASTM D6241	MARV	700 lbs.
Permittivity	ASTM D4491	MARV	0.05 sec-1

Notes:
MARV = Minimum Average Roll Value
All strength properties specified are for the weaker principle direction.

2. The geotextile shall be stock products. Subject to compliance with the requirements contained in this section, acceptable manufacturers and models of geotextiles include but are not limited to:

A. Manufacturers

1. Non-Woven Geotextile – TenCate Mirafi 1100N or equal
2. Woven Geotextile – TenCate Mirafi 500X or equal

B. Accessories

1. Sewing Thread: The thread for seaming geotextiles shall be polymetric with chemical and UV light resistance properties equal to or greater than the fabric itself. The thread color shall contrast the color of the fabric.

C. Source Quality Control

1. Provide in accordance with Division 01 General Requirements.

PART 3 – EXECUTION

3.01 PREPARATION

A. Surface Preparation

1. Provide smooth graded surface, free of large stones, tree roots and limbs, or other debris prior to placement of geotextiles. Areas readied for placement of geotextile shall be inspected by Engineer.

3.02 INSTALLATION

A. Special Techniques

1. Deployment: Unroll fabric in area to be used, in down-slope direction. Minimize the amount of wrinkles.

2. Seaming: Seams may either be sewn or overlapped. For sewn seams, overlap adjacent fabric sides and ends a minimum of 6-inches. Sew seams with a flat seam, SSa-1, using a 401K two-thread lock stitch and 4 to 6-stiches per inch. All sewn seams shall be continuous. Spot sewing is not permitted. For overlap seams, overlap adjacent fabric sides and ends a minimum of 12-inches. Overlaps should be placed in such a manner so the uphill sheet is shingled over the downhill sheet.

3.03 REPAIR/RESTORATION

A. Patching: All rips and tears shall be patched with a minimum one foot overlap in each direction from the perimeter of the damaged area. If a damaged area is greater than half the width of the fabric roll, then the entire roll width of the damaged area shall be cut out and a new section placed over the area.

3.04 FIELD QUALITY CONTROL

A. Provide in accordance with Division 01 General Requirements.

3.05 CLOSEOUT ACTIVITIES

A. Provide in accordance with Division 01 General Requirements.

3.06 PROTECTION

A. Secure geotextile from wind damage during and after construction. Construction equipment shall not travel directly upon any in-place geotextiles.

END OF SECTION

SECTION 31 10 00

SITE CLEARING

PART 1 – GENERAL

1.01 SUMMARY

A. Section Includes

1. Site clearing and grubbing

1.02 PRICE AND PAYMENT PROCEDURES

A. Measurement and payment requirements: per Division 01 General Requirements.

1.03 REFERENCES

A. Definitions

1. Clearing: cutting and disposing of trees, downed timber, stubs, brush, bushes, snags, rubbish, debris, and other objectionable matter and materials and the removal and storage of fences, signs, walks, guard rails, curbs and other items to be restored.
2. Grubbing: removal and disposal of stumps, roots, duff, foundations and other objectionable matter and materials to a minimum of 6 inches below original ground surface.
3. Topsoil: friable loam surface soil found in a depth of not less than 4 inches from the original ground surface. "Satisfactory" topsoil is reasonably free of subsoil, clay lumps, stones, and other objects over 2 inch diameter, and free of weeds, roots, and other objectionable material.

1.04 ADMINISTRATIVE REQUIREMENTS

A. Coordination, Sequencing, and Scheduling: per Division 01 General Requirements.

1.05 QUALITY ASSURANCE

A. Provide in accordance with Division 01 General Requirements.

1.06 DELIVERY, STORAGE AND HANDLING

A. Provide in accordance with Division 01 General Requirements.

B. Store trees, plants and shrubs in protected areas and give ample water to keep them in a thriving condition for subsequent replanting.

C. Store slate and flagstone walk sections, granite and stone curbs, fences, signs, guard rails and other items removed at approved locations for subsequent reinstallation.

D. Do not obstruct roads, driveways, sidewalks, gutters and drainage ditches, swales and channels with stored materials.

1.07 SITE CONDITIONS

A. Locations of trees, plantings, vegetation, sidewalks, curbs and other living and nonliving items shown on the Drawings were determined by actual surveys at the time surveys were made and conditions may have changed. Verify existing site conditions.

PART 2 – PRODUCTS (NOT USED)

PART 3 – EXECUTION

3.01 EXAMINATION

A. Verify limiting boundaries such as permanent and temporary easements, property lines, rights-of-way and grading limits have been accurately located and clearly marked.

B. Verify pipeline routings and other items of Work have been accurately located and clearly marked.

3.02 PREPARATION

A. Mark all trees, plantings and other objects which are to be removed, trimmed, cut, or removed and preserved. Inspect these items with the Engineer prior to start of Work. Do not remove or trim unmarked items unless approved by Engineer.

B. Protect existing trees and other vegetation indicated to remain in place, against unnecessary cutting, breaking or skinning of roots, skinning and bruising of bark, smothering of trees by stockpiling construction materials or excavated materials within drip line, excess foot or vehicular traffic, or parking of vehicles within drip line. Provide temporary guards to protect trees and vegetation to be left standing.

C. Protect existing objects not indicated to be removed. Avoid interference with the use of, and passage to and from, adjacent buildings, facilities, driveways, walks, drainage systems and road.

D. Saw-cut pavements required to be removed in advance, including highways, driveways and walks, but do not remove until the Work is ready to be installed.

E. Do not remove highway signs, guard rails and other control, safety and warning devices until just prior to the installation of the Work.

F. Leave items affecting traffic, safety, lives and the containment of humans and animals and essential to the protection of property or the operation of a business in place as long as possible and replace as soon as possible when such items must be removed.

3.03 PERFORMANCE

A. General

1. Do not use explosives for clearing and grubbing operations.
2. Limit the area of clearing and grubbing to the minimum area possible to allow for proper installation of Work and to preserve plantings and natural vegetation to the maximum extent. Conduct Work so that present growth will blend with the limits of construction and a natural appearance will be attained.
3. Confine clearing and grubbing operations to:
   a. areas where Work will be performed but to minimum extent possible to allow proper installation of Work;
   b. within grading limits as shown on the Drawings; and
   c. within Owner easements and property lines of lands owned by Owner.
4. Employ measures to avoid erosion.
5. Do not disturb property markers unless absolutely necessary. If necessary to disturb or remove a property marker, comply with Division 01 General Requirements and employ a registered land surveyor to establish the property marker location, mark area, and replace property marker as soon as possible.

B. Stripping Topsoil

1. Strip topsoil within limits as designated on Drawings or as required to prevent mixing with underlying subsoil or objectionable material.
2. Stop topsoil stripping at a sufficient distance to prevent damage to main root systems of trees indicated to be left standing.
3. Stockpile topsoil in storage piles in areas shown or where directed and provide for drainage of surface water. Cover storage piles as necessary to prevent windblown dust and erosion.

4. Surplus loam and topsoil not required for completion of the Work shall remain the property of the Owner. Stockpile surplus material on-Site and maintain and protect until Work is complete.

C. Trees and Plantings

1. Remove only those items marked for removal in grassed, planted and open areas.

2. Trees

a. Notify property owners in advance of tree trimming or removal to allow property owner to cut and remove trees and retain debris unless otherwise directed.

b. Remove and/or trim trees in wooded areas only as required. Minimize damage to trees that are to be left standing. Immediately remove and legally dispose of debris.

c. Timber and wood removed by Contractor shall become the property of Contractor.

d. Trim trees evenly to achieve neat severance with the least possible damage to the tree.

e. Apply wet burlap to prevent drying out where roots are cut or damaged.

D. Pavements, Walks, Curbs and Guard Rails

1. Remove existing pavements, walks, and curbs to the limits shown on Drawings, or if not shown, to the minimum extent possible.

2. Saw-cut asphalt and concrete paved surfaces before removal.

3. Carefully remove slate and flag stone walks, granite and stone curbs and guard rails to the minimum extent possible. Terminate removals at a joint or guard rail post. Store and protect for reuse.

E. Walls, Fences, and Other Obstructions

1. Carefully remove walls, fences, signs, sheds and other obstructions encountered and store for subsequent replacement.

F. Promptly remove and legally dispose of materials not specified to be stored or re-used. Do not burn debris unless approved and required permits are obtained.

G. Replant and restore surfaces. Comply with requirements of Section 32 90 00 for planting.

H. Replace materials that have been removed in order to perform the Work to the original condition as approved.

END OF SECTION

SECTION 32 12 16

ASPHALT PAVING

PART 1 – GENERAL

1.01 SUMMARY

A. Section Includes

1. Furnish and install tack prime coat, hot mix asphalt pavement base and surface courses and miscellaneous patching in accordance with this Section and applicable reference standards listed in Article 1.03.

1.02 PRICE AND PAYMENT PROCEDURES

A. Measurement and payment requirements: per Division 01 General Requirements.

1.03 REFERENCES

A. Reference Standards

1. MassDOT Standard Specifications and Supplements, except for Compensation sections

2. MassDOT Construction Details

1.04 ADMINISTRATIVE REQUIREMENTS

A. Coordination, Sequencing, and Scheduling: per Division 01 General Requirements.

1.05 SUBMITTALS

A. Submit in accordance with the Division 01 General Requirements.

1. Product Data

2. Manufacturer Instructions

B. Closeout and Maintenance Material Submittals: per Division 01 General Requirements.

1.06 QUALITY ASSURANCE

A. Provide in accordance with Division 01 General Requirements.

1.07 DELIVERY, STORAGE, AND HANDLING

A. Provide in accordance with Division 01 General Requirements.

1.08 SITE CONDITIONS

A. Existing Conditions: per Division 01 General Requirements.

PART 2 – PRODUCTS

2.01 BITUMEN FOR TACK PRIME COAT

A. Provide in accordance with MassDOT Standard Specifications and Supplements Section 460 and MassDOT Construction Details.

2.02 HOT POURED RUBBERIZED ASPHALT SEALANT

A. Provide in accordance with MassDOT Standard Specifications and Supplements Section 460 and MassDOT Construction Details.

2.03 HOT MIX ASPHALT SURFACE COURSE STANDARD TOP

A. Provide in accordance with MassDOT Standard Specifications and Supplements Section 460, M3.11.03 and MassDOT Construction Details.

2.04 HOT MIX ASPHALT BASE COURSE

A. Provide in accordance with MassDOT Standard Specifications and Supplements Section 460, M3.11.03 and MassDOT Construction Details.

2.05 HOT MIX ASPHALT FOR MISCELLANEOUS USES

A. Provide in accordance with MassDOT Standard Specifications and Supplements Section 472 and MassDOT Construction Details.

2.06 SOURCE QUALITY CONTROL

A. Provide in accordance with Division 01 General Requirements.

PART 3 – EXECUTION

3.01 INSTALLATION

A. Place hot mix asphalt base and top courses on roadways, sidewalks and other areas to maintain traffic access/egress to all properties abutting any Work and for the safe passage of pedestrian and vehicular traffic in accordance with MassDOT Standard Specifications and Supplements Section 460 and MassDOT Construction Details.

1. Provide 3-inch minimum compacted thickness depth of hot mix asphalt base course to achieve the necessary base course grade in support of finish grade pavement elevations indicated on the Drawings or as directed by the Engineer.

2. Apply bitumen for prime/tack coat at a rate of 1/10 to 1/20 gallons per square yard over the hot mix asphalt base course immediately prior to the installation of top course, as shown on the Drawings or as directed by the Engineer. Clean surface of sand and foreign matter and dry before applying the prime coat.

3. Provide 2-inch minimum compacted thickness depth of hot mix asphalt surface course (Standard Top) to achieve the finish grades indicated on the Drawings or as directed by the Engineer.

4. Apply hot poured rubberized asphalt sealant to longitudinal and transverse joints.

B. Install hot mix asphalt for patching and handwork on roadway surfaces that cannot be installed mechanically and when directed by the Engineer in accordance with MassDOT Standard Specifications and Supplements Section 472 and MassDOT Construction Details.

3.02 CLOSEOUT ACTIVITIES

A. Provide in accordance with Division 01 General Requirements.

END OF SECTION

This page intentionally left blank

SECTION 32 90 00

PLANTING

PART 1 – GENERAL

1.01 SUMMARY

A. Section Includes

1. Provide loam borrow, seeding, and supporting materials in accordance with this Section and applicable reference standards listed in Article 1.03.

1.02 PRICE AND PAYMENT PROCEDURES

A. Measurement and payment requirements: per Division 01 General Requirements.

1.03 REFERENCES

A. Reference Standards

1. MassDOT Standard Specifications and Supplements, except for Compensation sections
2. MassDOT Construction Details
3. ANSI Z60.1 Standard Nursery Stock

1.04 ADMINISTRATIVE REQUIREMENTS

A. Coordination, Sequencing, and Scheduling: per Division 01 General Requirements.

1.05 SUBMITTALS

A. Submit in accordance with the Division 01 General Requirements.

1. Product Data
2. Manufacturer Instructions

B. Closeout and Maintenance Material Submittals: per Division 01 General Requirements.

1.06 QUALITY ASSURANCE

A. Provide in accordance with Division 01 General Requirements.

1.07 DELIVERY, STORAGE, AND HANDLING

A. Provide in accordance with Division 01 General Requirements.

1.08 SITE CONDITIONS

A. Existing Conditions: per Division 01 General Requirements.

PART 2 – PRODUCTS

2.01 LOAM BORROW

A. Provide in accordance with MassDOT Standard Specifications and Supplements Section 751and MassDOT Construction Details.

B. Type: per MassDOT Standard Specifications and Supplements Section M1.05.0.

2.02 SEED AND SUPPORTING MATERIAL

A. Provide seed, limestone, fertilizers, plant materials, water for irrigation and soil conditioners in accordance with MassDOT Standard Specifications and Supplements Section 765.40 and MassDOT Construction Details, and ANSI Z60.1.

2.03 SOURCE QUALITY CONTROL

A. Provide in accordance with Division 01 General Requirements.

PART 3 – EXECUTION

3.01 INSTALLATION

A. Place loam borrow at designated locations where plant material (grasses, bushes, and trees) are to be installed or re-installed in accordance with Section 751 of the MassDOT Standard Specifications and the Drawings or as directed by the Engineer.

3.02 SEED AND SUPPORTING MATERIAL

A. Install and apply seed and supporting materials at the rates of application and in accordance with MassDOT Standard Specifications and Supplements Section 765.40 and the Drawings.

3.03 CLOSEOUT ACTIVITIES

A. Provide in accordance with Division 01 General Requirements.

END OF SECTION

SECTION 33 10 00

WATER UTILITIES

PART 1 - GENERAL

1.01 SUMMARY

A. Work under this section includes installation of water main pipe, fittings, valves and all appurtenances necessary to complete the Work shown on the Drawings.

B. Related Requirements

a. 31 00 00 - Earthwork.

1.02 PRICE AND PAYMENT PROCEDURES

A. Measurement and payment requirements: per Division 01 General Requirements.

1.03 REFERENCE STANDARDS

A. American Society for Testing and Materials (ASTM)

1. ASTM A307 - Standard Specification for Carbon Steel Bolts and Studs 60,000 PSI Tensile Strength.

B. American National Standards Institute (ANSI)

1. ANSI B16.1 - Cast Iron Pipe Flanges and Flanged Fittings.

C. American Water Works Association (AWWA)

1. AWWA C104 - Cement-Mortar Lining for Ductile-Iron Pressure Pipe and Fittings.

2. AWWA C105 - Polyethylene Encasement for Ductile-Iron Piping for Water and Other Liquids.

3. AWWA C110 - Ductile-Iron and Gray-Iron Fittings, 3-in Through 48-in for Water and Other Liquids.

4. AWWA C111 - Rubber-Gasket Joints for Ductile-Iron Pressure Pipe and Fittings.

5. AWWA C115 - Standard for Flanged Ductile-Iron Pipe with Threaded Flanges

6. AWWA C151 - Ductile-Iron Pipe, Centrifugally Cast in Metal Molds olds or Sand-Lined Molds for Water or Other Liquids.

7. AWWA C153 - Ductile-Iron Compact Fittings, 3-in Through 64-in for Water and Other Liquids.

8. AWWA C600 - Standard for Installation of Ductile-Iron Water Mains and Their Appurtenances.

9. AWWA C651 - Disinfection Water Mains

D. Where reference is made to one of the above standards, the revision in effect at the time of bid opening shall apply.

1.04 ADMINISTRATIVE REQUIREMENTS

A. Coordination, Sequencing, and Scheduling: per Division 01 General Requirements.

1.05 SUBMITTALS

A. Submit in accordance with Division 01 General Requirements.

1. Product Data: Submit manufacturer's product data and installation instructions for each product specified for water service piping.

2. Certificates

    a. Manufacturer's notarized certificate certifying conformance with the Specifications to accompany shipments

3. Design Data/Submittals

    a. Pipe manufacturer's anti-floatation calculations for each pipe material and details, signed and stamped by a licensed Professional Engineer in the State of Massachusetts based on the following criteria:

        i. Groundwater elevation shall be set at grade above the pipe.

        ii. Factor of safety shall be 1.1; downward forces from the weight of the pipe and soils over pipe shall be 1.1 times the buoyant uplift forces.

        iii. The pipe shall be considered empty. Calculations shall not consider the weight of internal water.

4. Manufacturer Instructions

5. Field Quality Control Submittals

    a. test results

    b. logs of inspection and testing

B. Closeout and Maintenance Material Submittals: per Division 01 General Requirements.

1. Record depth and take ties as directed by the Engineer for Conformed to Construction Records.

1.06 QUALITY ASSURANCE

A. Provide in accordance with Division 01 General Requirements.

B. Code Compliance: Comply with State Plumbing Code and local plumbing codes. Where there is a conflict in the codes, the more stringent code shall apply.

C. General: All products used in the construction that come in contact with drinking water shall meet the National Sanitation Foundation Standard 61 for Drinking Water System Components - Health Effects. The primary focus of the standard is on contaminants or impurities, which may be imparted indirectly to drinking water. The products and/or materials covered include, but are not limited to, protective materials (coatings, linings, liners, etc.), joining and sealing materials (solvent cements, welding materials, gaskets, etc.), and mechanical devices used in transmission/distribution systems, (valves, etc.).

1.07 DELIVERY, STORAGE, AND HANDLING

A. Provide in accordance with Division 01 General Requirements.

B. Packing, Shipping, Handling, and Unloading

1. Provide that each shipment of pipe, pipefittings and appurtenances includes manufacturers' Certificate of Conformance.

2. Inspect upon delivery and reject pipe immediately that does not conform to the specified requirements or has been damaged beyond repair and immediately remove from Site.

C. Waste Management and Disposal

1. Remove damaged pipe from Site and legally dispose of.

1.08 SITE CONDITIONS

A. Existing Conditions: per Division 01 General Requirements.

PART 2 - PRODUCTS

2.01 GENERAL

A. Provide fittings of same type and class of materials as pipe. Provide commercially manufactured wyes or tees for service connections. Fitting must have single piece gasket.

2.02 DUCTILE IRON PIPE

A. Ductile iron pipe used for exterior piping shall be manufactured in accordance with the latest revision of AWWA/ANSI C151/A21.51. Ductile Iron pipe shall be Class 52,

centrifugally cast, double cement lined in accordance with AWWA/ANSI C104/A21.4, push-on joint or mechanical joint type, unless otherwise specified on the Drawings. Ductile iron pipe shall be supplied in 18-20 foot lengths with factory applied bituminous coatings in accordance with AWWA C151.

2.03 GATE VALVES, FITTINGS AND STOPS

A. Fittings: Pipe fittings shall be ductile iron, cement lined fittings. All fittings, except those associated with the flange pipe systems, shall have mechanical joints. The fittings shall be designed in accordance with the latest revision of AWWA/ANSI C153/A21.53 or AWWA/ANSI C110/A21.10, ductile iron and rated for 350 PSI working pressure for 3-inch through 24-inch diameter (250 PSI working pressure; 30-inch through 48-inch). All exterior fittings are to be bituminous coated, cement lined and seal-coated as previously specified for ductile iron pipe.

B. Accessories: Accessories such as gaskets, glands, bolts, nuts, etc., shall be designed in accordance with AWWA/ANSI C-111/A21.11 and shall be furnished as required to make all piping systems complete.

C. Gate valves: Gate valves shall be manufactured in accordance with the latest revision of ANSI/AWWA C-515. Gate valves shall be OPEN RIGHT, resilient wedge, non-rising stem type, designed for minimum 250-psi working pressure. Gate valves shall meet or exceed requirements AWWA C-515 of latest revision, shall be UL listed and FM approved. The valves shall be manufactured of high-strength ductile iron with a wall thickness meeting or exceeding the requirements of AWWA C-515. The wedge shall be ductile iron, gray iron, or copper alloy fully encapsulated in rubber in accordance with AWWA C-515, provided with protective wedge guide covers, symmetrical and shall seal equally well with flow in either direction. Valve stems shall be sealed by three (3) O-rings, with two (2) of the O-rings residing above the thrust collar. O-rings above the thrust collar shall be replaceable under full working pressure and with the valve in the full open position. Exterior nuts and bolts shall be type 304 stainless steel, with hexagonal heads and with dimensions conforming to ANSI B18.2.1. The operating nut shall be 2-inch square, ductile iron and constructed to ensure even valve operating input torque. Valve body gaskets shall be of the pressure energized O-ring style. The waterway shall be smooth and oversized with no depressions or cavities in the seat area that will allow foreign material to accumulate and affect closure or sealing. The valve body and bonnet shall be fusion bonded epoxy coated, inside and out per AWWA C-550. The coating shall be electro-statically applied prior to assembly and certified to ANSI/NSF 61 Standard. The valves shall be of the non-rising stem design with sealing accomplished by double "O" rings and shall OPEN RIGHT (CLOCKWISE). Gate valves shall be fully assembled in the USA according to AWWA Specifications.

1. Joints

    a. Ductile Iron to Ductile Iron: mechanical joint

    b. Ductile Iron to PVC: mechanical joint with grip rings

D. Corporation Stops: Corporation stops shall be as manufactured by A.Y. McDonald, Ford, Mueller or approved equal, conforming to the latest revision of AWWA Standard C800 and shall be individually inspected and tested for leaks by air pressure under water. Corporation stops shall be ball type, straight-through/full port design, with AWWA Standard (CC) inlet threads and compression outlet, designed to prevent blow-out and shall be bubble-tight at 300 psig working pressure. The stop shall be "No-Lead Brass", defined for this specification as UNS Copper Alloy No. C89520 or C89833 in accordance with the chemical and mechanical requirements of ASTM B584 and AWWA C-800 with double O-ring type Buna-N seals. The ball shall be coated with a nontoxic, non-water soluble, self-lubricating film (Teflon or equal). Corporation stops shall be capable of being installed using a standard tapping machine.

E. Curb Stops: Curb stops shall be as manufactured by A.Y. McDonald, Ford, Mueller or approved equal, conforming to the latest revision of AWWA Standard C800 and shall be individually inspected and tested for leaks by air pressure under water. Curb stops shall be ball type, straight-through/full port design, rated for 150 psig working pressure, with compression joints on both ends, a drain and shall be open right. The stop shall be "No-Lead Brass", defined for this specification as UNS Copper Alloy No. C89520 or C89833 in accordance with the chemical and mechanical requirements of ASTM B584 and AWWA C-800 with double O-ring type Buna-N seals and positive shut-off in either direction. The ball shall be coated with a nontoxic, non-water soluble, self-lubricating film (Teflon or equal).

F. Unions: Unions shall meet or exceed AWWA C800 standards, be compression type, with a pressure rating greater than the valve or fitting with which the union is used.

G. Repair Clamps: Shall be equal to Ford, Mueller, or ROMAC single band, stainless steel 6 inches through 20 inches.

H. Couplings: Shall be equal to Ford, Mueller, or ROMAC, certified to meet ANSI/NSF 61 standard and applicable requirements of AWWA C219. The sleeve shall be fusion bonded, epoxy coated ductile iron, meeting or exceeding the requirements of ASTM A-536. End rings shall be color coded for pipe type and constructed of ductile iron, meeting or exceeding the requirements of ASTM A-536. The gaskets shall be Styrene Butadiene Rubber (SBR) in accordance with ASTM D 2000 embossed with size and end ring color code. The nuts and bolts shall be steel conforming to the standards of ASTM A242 and AWWA C11. Couplings shall be rated for a minimum working pressure of 250 psi.

I. Valve Boxes: Each exterior valve shall be provided with a valve box. Valve boxes shall be cast iron and of the slide type. They shall be so designed and constructed as to prevent the direct transmission of traffic loads to the pipe or valve. The box shall be adjustable through at least 6 inches vertically without reduction of lap between sections to less than 4 inches. The length shall be as necessary to suit the ground elevation. The inside diameter of the box shall be at least 5-1/4 inches. Covers shall be close fitting and substantially dirt-tight with the word "WATER" cast in. The top of the cover shall be flush with the top of the box rim.

J. Service Boxes: Shall be manufactured in the United States, Buffalo style, slide type, with the top, cover and base constructed of heavy cast iron. The cover shall fit flush with the top of the box and be a locking type with a brass pentagonal nut and the word "WATER" cast in the cover.

2.04 TAPPING SLEEVES

A. Tapping Sleeves: Unless otherwise specified, sleeves shall be ductile iron construction meeting ASTM A536 Grade 65-45-12 and rated for 250 psig maximum working pressure. The sleeve shall be coated with asphaltic varnish and shall be certified to the requirements of ANSI/NSF-61. Side flange seals shall be of the O-ring type, either round, oval or rectangular in cross-sectional shape. Tapping sleeves shall include end joint accessories and split glands necessary to assemble the sleeve to the pipe. Tapping sleeves 12-inch and smaller shall be capable of working on Class ABCD pipe diameters without changing either half of the sleeve. Tapping sleeves for pipe sizes greater than 12-inch shall be field measured to determine class required. Outlet flanges dimensions and drilling shall comply with ANSI B16.1, class 125 and with MSS SP-60. All valves furnished shall be open right and shall be in accordance with valve requirements specified herein. Verify pipe material and diameter in the location sleeve will be installed.

2.05 ACCESSORIES

A. General: Provide anchorages for tees, plugs, caps, and bends. After installation, apply a full coat of asphalt or other acceptable corrosion-retarding material to surfaces of rods and clamps.

B. Clamps, Straps and Washers: Steel, ANSI/ASTM A506.

C. Rods: Steel, ANSI/ASTM A575.

D. Rod Couplings: Malleable iron, ANSI/ASTM A197.

E. Bolts: Steel, ANSI/ASTM A307.

F. Cast Iron Washers: ANSI/ASTM A126, Class A.

G. Thrust Blocks: 3000 psi concrete (min.).

H. Pipe Lubricant: Suitable for use in potable water supply.

PART 3 - EXECUTION

3.01 GENERAL

A. Coordinate all site piping Work with Owner.

B. Install site piping in accordance with the lines, elevations, grades and at the locations shown on the Drawings. Field verify elevations and slope and make adjustments as

necessary as approved by the Engineer. If grade is not shown, determine elevations of start and finish points for each run of pipe. Lay pipe to a uniform grade between points. Line and grade may be adjusted by the Engineer as required by field conditions.

C. Assist Engineer as needed to run level checks on pipe slopes and take ties.

3.02 INSTALLATION

A. General: All materials to be used shall be stored and handled in accordance with the manufacturer's recommendations. The Contractor is Responsible for replacing at his/her cost any pipe and/or material damaged during the course of unloading or construction.

B. Pipe Unloading: It is the responsibility of the Contractor to unload and string pipe. Pipe shall be lifted off the truck and placed on the ground with care and in accordance with manufacturer's recommendations to prevent damage to the pipe and the cement-lined interior of the pipe. Rolling the pipe off the truck or dropping the pipe is prohibited. Pipe may be stacked, but no more than three layers high and only with proper blocking in between layers.

C. Pipe Jointing: For exterior piping, all joints shall be made in a dry trench and in accordance with the manufacturer's recommendations and the best practices for class of pipe laid. The ends of the pipe shall be wiped clean with a dry cloth before making the joint.

D. Trench Limit: as shown on the Drawings.

E. Pipe Laying:

1. Installation of ductile iron water main and appurtenances shall be in accordance with the requirements of AWWA C600 (latest revision). The pipe shall be accurately laid to the line and grades shown and to the satisfaction of the Owner. Where necessary, the line and grade may be adjusted by the Owner from that shown on the Drawings to meet field conditions, and no extra compensation shall be claimed therefore.

2. New pipe shall be installed with a minimum of 5 feet of cover, measured from pipe crown to finished grade, unless otherwise shown on the Drawings or approved, in writing, by the Owner.

3. Where new pipe is to connect to existing pipe with less than 5 feet of cover exist, off-sets or joint deflection, in accordance with the allowances specified below, shall be used to transition from existing pipe elevation to new pipe elevation.

4. All pipe installed within 3 feet of a culvert or with less than 5 feet of cover (where approved) shall be insulated with a minimum 2-inch, 40 pound density Styrofoam material. The insulation shall extend the width of the trench, a minimum of 4 feet, above the pipe envelope and on the vertical sides of the trench bottom from the bottom to above the pipe envelope. No pipe shall be installed with less than 5 feet of cover without prior written approval of the Owner.

5. Joint Deflection: When it is necessary to deflect pipe from a straight line in either the horizontal or vertical plane, the maximum joint deflection shall not exceed that specified in AWWA C-600 (latest revision) or the maximum allowable deflection permitted by the manufacturer.

6. When mechanical joint, push-on joint, or similar pipe is installed, the bell of the pipe shall be cleaned of excess tar or other obstruction and wiped out before the cleaned and prepared spigot of the next pipe is inserted into it. The gasket, bell, and spigot shall be lubricated with gasket lubricating compound compatible with potable water. The new pipe shall be shoved firmly into place until properly seated and held securely until the joint has been completed. All pipes shall be pushed home by a method that protects the driving end of the pipe. Also, a minimum of two copper or bronze wedges shall be driven between each cast iron and/or ductile joint.

7. Pipe shall be installed beginning at the stub end, unless otherwise approved by the Owner. The interior of each length of pipe shall be swabbed and wiped clean before laying the next length. Whenever the Work is stopped, whether temporarily or for an extended period, the end of the pipe shall be carefully protected to prevent dirt, water, or other extraneous material from entering the pipe by use of a construction cap. Bedding shall be as shown on the plans. No pipe shall be covered or trench backfilled until approved by the Owner.

8. In areas where the Contractor's trenching operation exceeds the typical section, the Contractor may be required to use a higher strength class pipe in lieu of the designated class at no additional cost to the Owner.

9. Restrained joints shall be provided for water mains where any bends, tees, plugs, wyes, or valves are installed. The length of joint restraint shall be in accordance with AWWA Ductile Iron Pipe and Fittings Manual of Practice M41.

F. Valve Installation: All valves shall be installed in accordance AWWA C-600, AWWA C-515 and the manufacturer's recommendations. Valves shall bear no stresses due to loads from the adjacent pipe. All valves shall be inspected before installation and they shall be cleaned and well lubricated before being installed in the line. Secure to distribution main by means of rods or retainer glands.

G. Tapping Sleeves and Valves and Insertion Valves: Pipe shall be adequately supported such that machinery used to tap the main does not put undue stress on the pipe. Support of pipe may include construction of a concrete pad to distribute the load. Additional payment will not be made for construction of a concrete support pad.

H. Pipe Cutting:

1. Where required, sections of pipe may be cut to provide shorter sections of pipe necessary for the construction. The cutting of the pipe shall be done in accordance with the pipe manufacturer's recommendations and subject to the approval of the Owner.

2. In general, the pipe material shall be cut by using a saw or milling process, approved by the pipe manufacturer. The pipe shall be cut, not broken. The cut end of the pipe shall be square to the axis of the pipe and any rough edges ground smooth.

I. Thrust Blocks: Thrust blocks may be used when use of a joint restraint system is not feasible or in conjunction with a joint restraint system, where required by Owner. Concrete used for thrust restraint shall be 3,000 psi (minimum) and shall be sized in accordance with the thrust block schedule provided shown on the Drawings.

J. Water Service Piping: Extend water service piping of size and in location as indicated on the Drawings, or as directed by the Owner. Water services 1-inch or less in diameter shall be replaced with 1-inch Type K copper tubing. Water services 1 ¼-inch to 2-inches in diameter shall be replaced with 2-inch Type K copper tubing. Water services shall be replaced to the property line, as determined by the Owner, unless otherwise shown or approved.

K. Repair Clamps: Repair clamps are not considered as permanent repairs. If a section of main is found to be defective, it shall be cut out and a new section of pipe shall be installed using solid cast couplings, at no additional cost to the Owner.

3.03 SPECIAL REQUIREMENTS

A. Pressure Pipe - Ductile Iron: Valves shall bear no stresses due to loads from the adjacent pipe.

B. Assembling Mechanical Joints: Surfaces against which the gasket will come in contact shall be thoroughly brushed with a wire brush prior to assembly of the joint. The gasket shall be cleaned. The gasket, bell, and spigot shall be lubricated by using gasket-lubricating compound compatible with potable water. The spigot shall be inserted into the bell until it is correctly seated. The gasket shall then be seated evenly in the bell at all points, centering the spigot, and the gland shall be pressed firmly against the gasket. After all bolts have been inserted and the nuts have been made up finger-tight, diametrically opposite nuts shall be progressively and uniformly tightened all around the joint to the proper tension by means of a torque wrench. Mechanical joints shall be assembled with mechanical joint retainer glands where appropriate.

C. Torque mechanical joint bolts with a torque wrench to the range specified in AWWA C-600. Mechanical joint bolts shall be re-torqued to the range specified in AWWA C-600 after waiting a period of two hours. If effective sealing of the joint is not attained at the maximum torque specified, the joint shall be disassembled and thoroughly cleaned, then reassembled. Bolts shall not be overstressed to tighten a leaking joint.

3.04 FIELD QUALITY CONTROL

A. Disinfection Of Water Lines:

a. General: Water mains will be disinfected by the CONTRACTOR. At completion of water service installation, flush and disinfect in conformance with the latest revision of

AWWA C651. Prevent contaminated or highly chlorinated water from entering new or previously disinfected mains.

b. Flushing and draining: Flush using water from existing main. Drain at hydrant first and then building. Provide the following minimum flow in gallons per minute: 4" diameter - 100 GPM; 6" diameter - 220 GPM; 8" diameter - 390 GPM; 12" diameter - 880 GPM.

c. Method: Slug method using sodium hypochlorite.

d. Sampling: Provide sampling taps at 500 ft. intervals and at end of line inside building. Take one sample at each location as described in Section 9 of AWWA C651. No hose of fire hydrant shall be used in the collection of samples.

e. Equipment: Provide water pumps with adequate metering devices. Provide chlorine injection pumps or chlorinators, which allow accurate measurement of chlorine being introduced to water service.

f. Personnel: Submit names of personnel or firm to perform disinfection work.

g. Neutralization: The Contractor shall be responsible for neutralizing the chlorine residual of the disposed water. Neutralization chemical tablets and dosages listed in Appendix B of AWWA C651 (latest revision) are recommended.

h. The Contractor shall furnish and install temporary blow-off/sample lines on the proposed water mains as required. Once a water main has been accepted and put in service, the Contractor shall remove all blow-off/sample lines up to the corporation stop.

B. Testing Of Water Service Piping

a. Perform hydrostatic testing of completed lines. Apply 1.5 times the working pressure for 20 minutes, 2-psi gage drop or less is acceptable.

b. Perform operational testing of valves by opening and closing under water pressure to insure proper operation.

C. Testing Of Water Main

a. Perform pressure and leakage tests under Owner supervision, in accordance with the latest revision of AWWA C-600 and the requirements set forth below.

b. Duration of hydrostatic testing shall be a minimum of two (2) hours. The test pressure shall be 1.5 times the working pressure at the lowest point, and in no case less than 150 psi.

c. The allowable leakage for ductile iron pipe shall be determined by the formula:

$$L = \frac{SD\,P^{1/2}}{133{,}200}$$

Where L is the allowable leakage in gallons per hour, S is the length of pipe in feet, D is the nominal diameter in inches, and P is the average test pressure in psi.

For convenience, the following table may be used to estimate allowable leakage for ductile iron water main installations:

CIPRA RECOMMENDED ALLOWABLE LEAKAGE PER 1000-FT. OF PIPELINE*
(GALLONS PER HOUR)

Avg. Test Pressure PSI	NOMINAL PIPE DIAMETER - INCHES 4	6	8	10	12	16
450	0.64	0.95	1.27	1.59	1.91	2.55
400	0.60	0.90	1.20	1.50	1.80	2.40
350	0.56	0.84	1.12	1.40	1.69	2.25
300	0.52	0.78	1.04	1.30	1.56	2.08

Avg. Test Pressure PSI	NOMINAL PIPE DIAMETER - INCHES 4	6	8	10	12	16
275	0.50	0.75	1.00	1.24	1.49	1.99
250	0.47	0.71	0.95	1.19	1.42	1.90
225	0.45	0.68	0.90	1.13	1.35	1.80
200	0.43	0.64	0.85	1.06	1.28	1.70
175	0.40	0.59	0.80	0.99	1.19	1.59
150	0.37	0.55	0.74	0.92	1.10	1.47
125	0.34	0.50	0.67	0.84	1.01	1.34
100	0.30	0.45	0.60	0.75	0.90	1.20

* For mechanical or push-on joint pipe with 18-ft. nominal lengths. To obtain the recommended allowable leakage for pipe with 20-ft. nominal lengths, multiply the leakage calculated from the above table by 0.9

If the pipeline under test contains sections of various diameters, the allowable leakage will be the sum of the computed leakage for each size.

3.05 UTILITIES TO BE ABANDONED

A. Close open ends of abandoned underground utilities which are not indicated to be removed. Provide sufficiently strong closures acceptable to ENGINEER to

withstand hydro-static or earth pressure which may result after ends of abandoned utilities have been closed.

3.06 CLEANING

A. Clean and flush piping after Work is completed and before final acceptance.

3.07 CLOSEOUT ACTIVITIES

A. Provide in accordance with Division 01 General Requirements.

END OF SECTION

SECTION 33 39 00

PRECAST UTILITY STRUCTURES

PART 1 – GENERAL

1.01 SUMMARY

A. Section Includes

1. Provide all materials, tools, equipment and labor required for the design, preparation, cleaning, and construction of all precast concrete structures, and associated frames, covers and hatches.

B. Related Requirements

1. 31 20 00 Earthwork

1.02 PRICE AND PAYMENT PROCEDURES

A. Measurement and Payment requirements: per Division 01 General Requirements.

1.03 ADMINISTRATIVE REQUIREMENTS

A. Coordination, Sequencing, and Scheduling: per Division 01 General Requirements.

1.04 REFERENCES

A. Reference Standards

1. ACI 117 Specifications for Tolerances for Concrete Construction and Materials and Commentary

2. ACI 301 Specifications for Structural Concrete

3. ASTM C31/C31M Standard Practice for Making and Curing Concrete Test Specimens in the Field

4. ASTM C39/C39M Standard Test Method for Compressive Strength of Cylindrical Concrete Specimens

5. AASHTO H20

6. ASTM C913

7. ASTM C478

1.05 SUBMITTALS

A. Submit in accordance with Division 01 General Requirements.

B. Product Data

1. Submit manufacturers' product data and installation instructions for frames, covers, hatches, precast items, sleeves, joint sealants, and frost barrier.

C. Certifications

1. Certificate of Design: The Contractor shall be responsible for design of all precast structures including antiflotation slabs, if necessary and may provide the precast structures requiring antiflotation slabs as one complete unit. Submit a certificate of design signed by a Professional Engineer, registered in the State of Massachusetts and having five (5) years minimum experience in the design of similar structures, certifying that all precast structures including the antiflotation slabs, whether provided separately or as a monolithic unit, have been designed to withstand all forces including soil, traffic and hydrostatic in accordance with all applicable laws, regulations, rules and codes.

D. Shop Drawings

1. For all precast concrete items, show components to be used, elevations of top of precast sections, base and pipe inverts, location of pipe penetrations, and steps for each structure. Verify finish grade elevation at each proposed location in the field.

E. Closeout and Maintenance Material Submittals: per Division 01 General Requirements.

1.06 DELIVERY, STORAGE, AND HANDLING

A. Provide in accordance with Division 01 General Requirements.

1.07 QUALITY ASSURANCE

A. Provide in accordance with Division 01 General Requirements.

B. Provide complete precast concrete structures capable of supporting AASHTO H20 loading.

C. Precast structures comply with ASTM C913 "Standard Specification for Precast Concrete Water and Wastewater Structures."

D. Precast manhole components shall comply with ASTM C478

1.08 SITE CONDITIONS

A. Existing Conditions: per Division 01 General Requirements.

PART 2 – PRODUCTS

2.01 MATERIALS

A. All precast concrete shall meet the following requirements:

1. Design to resist soil loads, surcharges, and buoyant forces.
2. Minimum 28-day compressive strength of 4,000 psi.
3. Minimum reinforcing steel yield stress of 40,000 psi.
4. Minimum concrete cover over reinforcing bars of one inch.
5. Minimum cement content of 564 pounds per cubic yard.
6. Trowel finish on all floors

B. Sewer Brick: ASTM C32, Grade SS, hard brick.

C. Concrete Masonry Units: Conform to ASTM C139.

D. Mortar: Type M, ASTM C270. Use Type II Portland cement, Type S lime. Proportions for Mortar: 1 part Portland cement, 1/4 part hydrated lime, 3 to 3 3/4 parts sand.

E. Concrete Fillet: Minimum 3,000 psi strength concrete.

F. Base Sections: Precast monolithic construction with steps as shown on the Drawings.

G. Barrel Sections: Precast with steps as shown on the Drawings.

H. Top Sections: Precast concentric cone with steps as shown on Drawings. Use flat cover or hatch as shown on Drawings.

I. Pipe to Structure Connections: Connections shall be watertight, expandable pipe sleeve with adjustable expansion ring equal to Press-Boot by Press-Seal Gasket Corp., Fort Wayne, Indiana. Wrap each joint with EZ-wrap, or equal, as shown on Drawings.

J. Joints Between Precast Sections: Watertight, shiplap-type seal with two rings of one-inch diameter butyl rubber sealant.

K. Steps: Aluminum or polypropylene reinforced with steel rod. Meet OSHA requirements, min. width 16". Coat aluminum to be cast into concrete with bituminous paint.

L. Riser Support Bracket: 10 gauge, type 304, No. 3 finish stainless steel.

M. Frames, Grates, and Covers

1. Cast iron: Conform to ASTM A48 Class 30.

2. Aluminum: Provide alloy number 713.0. Conform to ASTM B26.

3. Carbon Steel: Conform to ASTM A36.

4. Manhole frames and covers: Minimum weight of 320 pounds.

a. Standard frames and covers: Model R1643 frame and type C cover with self-sealing application by Neenah Foundry, or equal.

N. Grade Rings: Provide precast grade rings (if required) to raise rim elevations of the frame and covers.

O. Hatch Covers

1. Hatch covers shall be of the styles, types and sizes shown on the Contract Drawings. All hatch covers shall be of the same manufacturer. Manufacturer shall guarantee proper operation and against defects in material or workmanship for a period of five (5) years. All hatch covers shall be of aluminum as manufactured by the Bilco Company, Halliday Products, Inc., Babcock-Davis, or approved equal.

2. Type J and JD hatch covers shall be single leaf and double leaf, respectively, watertight, self-draining type. Door leaf shall be of 1/4 inch thick aluminum diamond pattern plates reinforced with aluminum stiffeners as required and capable of withstanding a live load of 300 pounds per square foot. Channel frame shall be 1/4 inch thick aluminum with anchor flange around the perimeter. A continuous EPDM debris gasket shall be mechanically attached to the frame. Each door leaf shall be equipped with a minimum of two (2) hinges, with stainless steel pins, compression spring operators enclosed in telescopic tubes to afford easy operation, and an automatic hold-open arm with release handle. Snap locks with removable handle and safety chains shall be provided. A 1-1/2 inch drainage coupling shall be provided in the channel frame. Hardware shall be stainless steel with factory mill finish and bituminous coating applied to exterior of frame.

3. Type K and KD hatch covers shall be single leaf and double leaf, respectively. Door leaf shall be 1/4 inch thick aluminum diamond pattern

plate reinforced with aluminum stiffeners as required and capable of withstanding a live load of 150 pounds per square foot. Channel frame shall be of 1/4 inch thick extruded aluminum with built-in neoprene cushion and with strap anchors bolted on the exterior. Door leaf shall be equipped with a minimum of two hinges bolted to underside and pivoted on torsion bars that counterbalance the door for easy operation. The door shall open 90 degrees and lock automatically in that position. A vinyl grip handle shall be provided to release the cover for closing. Doors shall be equipped with a snap lock and removable handle. Hardware shall be stainless steel with factory mill finish and bituminous coating applied to exterior of frame.

4. Hatch covers shall be equipped with a fall protection grating system of fiberglass or aluminum construction, and 316 stainless steel hardware. Fall protection system shall have a live load capacity of 300 psf and shall be a safety color: orange or yellow. It shall have a spring loaded lifting handle and an aluminum or stainless steel hold open arm and release handle. It shall automatically lock in a 90 degree open position, and shall be lockable in the closed position by a padlock (not included).

P. Frost barrier: U.V.-resistant, high grade polyethylene, minimum thickness 6 mils.

Q. Joint sealants:

1. Butyl Rubber Sealant: One-inch diameter strips equal to that manufactured by Kent Seal.

2. Butyl Rubber Caulking: Conform to AASHTO M-198, Type B.

2.02 ANTI-FLOATATION SLAB:

A. Certificate of Design: The Contractor shall be responsible for design of all precast structures including antiflotation slabs and may provide the precast structures requiring antiflotation slabs as one complete unit. Submit a certificate of design signed by a Professional Engineer, registered in the State of Massachutetts and having five (5) years minimum experience in the design of similar structures, certifying that all precast structures including the antiflotation slabs, whether provided separately or as a monolithic unit, have been designed to withstand all forces including soil, traffic and hydrostatic in accordance with all applicable laws, regulations, rules and codes.

B. Design of Anti-Floatation Slabs: Buoyancy calculations to determine necessary anti-flotation measures shall be based upon the following:

PART 3 – EXECUTION

3.01 CONSTRUCTION

A. Placement: Place precast bases on compacted bedding material so bottom of structure is plumb, and pipe inverts are at proper elevations. Place barrel and top sections in the appropriate height combinations. Plug all lifting holes inside and out with non-shrink grout. Fill below structure with 3,000 psi concrete, if required.

B. Joints: Follow manufacturer's instructions for sealing joints between precast sections. Provide two rings of 1-inch diameter butyl rubber sealant and joint wrap.

C. Frame and Covers:

1. Set to final grade as shown on the Drawings or set flush with pavement grade in paved areas, or 2" below finish grade in unpaved roads, or 24" above grade in cross country areas. Provide adequate temporary covers to prevent accidental entry until final placement of frame and cover is made.

2. Use two rings of 1-inch diameter butyl rubber sealant between frame and chimney joints. Provide downward force to frame so as to compress the joint, provide a watertight seal, and prevent future settlement. Point compressed joint with butyl rubber caulk sealant.

3. Set manhole frames and covers to final grade only after pavement base course has been applied, or after final grading of gravel roads.

4. Frost Barriers: Wrap each structure to the maximum excavation depth or not less than 5 feet below grade, with a minimum of four layers of 6 mils each of the polyethylene.

a. Clean structure exterior of all dirt and remove any protrusions.

b. Apply a 6-inch wide vertical strip of bituminous waterproofing adhesive from the top of manhole to the greatest excavation depth, but not in excess of 10 feet.

c. Start poly wrap at adhesive strip and proceed around manhole continuously, overlapping adhesive strip a minimum of 24 inches on the final layer.

d. Tuck and pleat poly at top in a continuous manner, minimizing size of folds. Extend poly past top of manhole frame and temporarily tuck remainder inside frame, until final backfill and paving.

e. Paved areas: Cut poly flush with manhole rim after pavement is in place.

f. Unpaved areas: Pull loose ends of poly together, remove excess air and tie off end with galvanized wire. Bury with manhole below grade.

5. Inverts: See detail on Drawings.

6. Steps: Replace any steps that are out of plumb and proper horizontal placement.

3.02 REPAIRS

A. Determine causes of all leaks and repair them. Perform earthwork required if manhole has been backfilled.

B. Perform repairs using methods and materials approved by the Engineer. Remove and replace or reconstruct manhole if necessary. Remove and replace defective sections if required by Engineer.

3.03 FIELD QUALITY CONTROL

A. Provide in accordance with Division 01 General Requirements.

B. Leakage Testing

1. General: Tests shall be observed and certified by Engineer. Structures must be complete including backfill for final test acceptance except for shelf and invert brickwork. Plug all pipes and other openings in the structure walls prior to test.

C. Exfiltration Test:

1. Plug pipes into and out of structure and secure plugs.

2. Lower groundwater table (GWT) to below structure. Maintain GWT at this level throughout test. Provide means of determining GWT level at any time throughout test.

3. Fill structure with water to top of structure.

4. Allow a period of time for absorption (determined by Contractor).

5. Refill to top of cone.

6. Determine volume of leakage in an 8 hour (min) test period and calculate rate.

7. Acceptable leakage rate: Not more than 1 gallon per vertical foot per 24 hours for manholes and wet wells. Not more than 1/10 of 1 percent of the tank volume in any 24-hour period for storage tanks.

8. Engineer reserves the right to require an infiltration test.

D. Vacuum Tests

1. Structures may be vacuum tested in lieu of the exfiltration test. The vacuum tests must be performed prior to backfilling the structure, filling joints, and constructing the structure inverts and benches. All pipe connections shall be made prior to the test.

2. Plug pipe openings and securely brace the plugs and pipe.

3. Set the tester onto the top section of the structure and inflate the compression band to effect a seal between the structure and the vacuum base.

4. Connect the vacuum pump to the outlet port, open the valve, start the motor and draw a vacuum of 10" mercury.

5. Close the valve and monitor the vacuum gauge.

6. The test shall pass if the vacuum holds at 10" mercury or drops no lower than 9" within the following times:

   a. 2.0 min for 0'-10' deep manholes

   b. 2.5 min for 10'-15' deep manholes

   c. 3.0 min for 15'+ deep manholes

7. If the vacuum drops in excess of the prescribed rate, the Contractor shall locate the leak, make proper repairs, and retest the structure.

8. If the unit fails the test after repair, the unit shall be water exfiltration tested.

3.04 CLOSEOUT ACTIVITIES

A. Provide in accordance with Division 01 General Requirements.

END OF SECTION

SECTION 33 46 16.19

PIPE UNDERDRAINS

PART 1 - GENERAL

1.01 SUMMARY

A. Work under this section includes installation of underdrain pipe, fittings and all appurtenances necessary to complete the Work shown on the Drawings.

B. Related Requirements

a. 31 00 00 - Earthwork.

1.02 PRICE AND PAYMENT PROCEDURES

A. Measurement and payment requirements: per Division 01 General Requirements.

1.03 REFERENCE STANDARDS

A. American Society for Testing and Materials (ASTM)

1. ASTM C1173 - Flexible Transition Couplings for Underground Piping Systems
2. ASTM D2321 - Underground Installation of Thermoplastic Pipe for Sewers and Other Gravity-Flow Applications
3. ASTM D2412 – Determination of External Loading Characteristics of Plastic Pipe by Parallel-Plate Loading
4. ASTM D3034 - Type PSM Poly Vinyl Chloride (PVC) Sewer Pipe and Fittings
5. ASTM D3139 - Joints for Plastic Pressure Pipe Using Flexible Elastomeric Seals
6. ASTM D3212 - Joints for Drain & Sewer Plastic Pipes Using Flexible Elastomeric Seals
7. ASTM D4101 - Polypropylene Injection and Extrusion Materials
8. ASTM F477 - Elastomeric Seals (Gaskets) for Joining Plastic Pipe
9. ASTM F679 – Poly Vinyl Chloride (PVC) Large-Diameter Plastic Gravity Sewer Pipe and Fittings

B. American National Standards Institute (ANSI)

1. ANSI B16.1 - Cast Iron Pipe Flanges and Flanged Fittings.

C. American Water Works Association (AWWA)

1. AWWA C605 – Underground Installation of Polyvinyl Chloride (PVC) Pressure Pipe and Fittings for Water.

2. AWWA C900 - Polyvinyl Chloride (PVC) Pressure Pipe and Fabricated Fittings, 4-inch through 12-inch.

D. Where reference is made to one of the above standards, the revision in effect at the time of bid opening shall apply.

1.04 ADMINISTRATIVE REQUIREMENTS

A. Coordination, Sequencing, and Scheduling: per Division 01 General Requirements.

1.05 SUBMITTALS

A. Submit in accordance with Division 01 General Requirements.

1. Product Data: Submit manufacturer's product data and installation instructions for each product specified for underdrain piping.

2. Certificates

   a. Manufacturer's notarized certificate certifying conformance with the Specifications to accompany shipments

3. Design Data/Submittals

   a. Pipe manufacturer's anti-floatation calculations for each pipe material and details, signed and stamped by a licensed Professional Engineer in the State of Massachusetts based on the following criteria:

      i. Groundwater elevation shall be set at grade above the pipe.

      ii. Factor of safety shall be 1.1; downward forces from the weight of the pipe and soils over pipe shall be 1.1 times the buoyant uplift forces.

      iii. The pipe shall be considered empty. Calculations shall not consider the weight of internal water.

4. Manufacturer Instructions

5. Field Quality Control Submittals

   a. test results

   b. logs of inspection and testing

B. Closeout and Maintenance Material Submittals: per Division 01 General Requirements.

1. Record depth and take ties as directed by the Engineer for Conformed to Construction Records.

1.06 QUALITY ASSURANCE

A. Provide in accordance with Division 01 General Requirements.

B. All piping systems, components, and appurtenances in contact with potable water (including potable water during any stage of treatment or conditioning) shall be certified to meet the requirements of ANSI/NSF 61 for water service.

1.07 DELIVERY, STORAGE, AND HANDLING

A. Provide in accordance with Division 01 General Requirements.

B. Packing, Shipping, Handling, and Unloading

1. Provide that each shipment of pipe, pipefittings and appurtenances includes manufacturers' Certificate of Conformance.

2. Inspect upon delivery and reject pipe immediately that does not conform to the specified requirements or has been damaged beyond repair and immediately remove from Site.

C. Waste Management and Disposal

1. Remove damaged pipe from Site and legally dispose of.

1.08 SITE CONDITIONS

A. Existing Conditions: per Division 01 General Requirements.

PART 2 - PRODUCTS

2.01 GENERAL

A. Provide fittings of same type and class of materials as pipe with single piece gasket, unless otherwise specified.

B. Minimum "pipe stiffness" at 5% deflection: 46 psi for all sizes when tested in accordance with ASTM D2412.

C. Joint deflection: accommodate an offset along the pipe axis of a minimum of 7 inches over 20 horizontal feet.

D. Source Quality Control: in accordance with Division 01 General Requirements.

2.02 POLYVINYL CHLORIDE (PVC) PIPE

A. PVC pipe, joints and fittings: AWWA C900, DR-18.

B. Joints: push-on joints, rubber gasketed, gaskets meeting ASTM F477 and joints in compliance with ASTM D3139.

2.03 POLYVINYL CHLORIDE (PVC) PERFORATED UNDERDRAIN PIPE

A. Perforated PVC pipe: schedule 80 with solvent weld bell ends; ASTM D1785.

1. 2 rows of holes, 120° apart, parallel to the axis of the pipe

2. Holes: ½" diameter, 5" center to center

B. Pipe compound: ASTM D1784

C. Joints: ASTM D2672

D. Solvent cement: ASTM D2564

2.04 MISCELLANEOUS

A. Pipe to Pipe Connection Flexible Couplings: ASTM C1173.

1. Type A: non-pressure application, elastomeric sleeve or rubber sleeve incorporating stainless steel tension bands and a tightening mechanism to provide a positive seal against both infiltration and exfiltration. Stainless steel bands: 300 series stainless steel. Coupling: resilient and unaffected by soil conditions, resistant to chemicals, ultraviolet rays, and fungus growth.

2. Type C: PVC repair coupling of same type and class of materials as pipe. Fitting: provided with single piece gasket.

B. Underground Marking Tape: detectable marking tape with aluminum core with minimum 6-inch width and minimum 5 mils thickness with APWA uniform color-coding for quick and easy identification and location. Text or lettering: repeated continuously along length of tape at intervals no greater than 3 feet indicating "Caution Buried Drain Line Below".

C. Manholes Connections: compression type flexible connector cast into the manhole wall or flexible boot connection per pipe manufacturer recommendations.

D. Gasket lubricant: solution of vegetable soap or other solution supplied by the pipe manufacturer.

E. Anti-floatation system for each pipe material: per the design of the pipe manufacturer and provided where required.

PART 3 - EXECUTION

3.01 GENERAL

A. Coordinate all site piping Work with Owner.

B. Install site piping in accordance with the lines, elevations, grades and at the locations shown on the Drawings. Field verify elevations and slope and make adjustments as necessary as approved by the Engineer. If grade is not shown, determine elevations of start and finish points for each run of pipe. Lay pipe to a uniform grade between points. Line and grade may be adjusted by the Engineer as required by field conditions.

C. Assist Engineer as needed to run level checks on pipe slopes and take ties.

3.02 INSTALLATION

A. General: All materials to be used shall be stored and handled in accordance with the manufacturer's recommendations. The Contractor is Responsible for replacing at his/her cost any pipe and/or material damaged during the course of unloading or construction.

B. Pipe Unloading: It is the responsibility of the Contractor to unload and string pipe. Pipe shall be lifted off the truck and placed on the ground with care and in accordance with manufacturer's recommendations to prevent damage to the pipe and the cement-lined interior of the pipe. Rolling the pipe off the truck or dropping the pipe is prohibited.

C. Trench Limit: as shown on the Drawings.

D. Pipe Laying:

1. Install in accordance with manufacturer's recommendations. Do not install unsound or damaged pipe or accessories.

2. Secure each length of pipe with bedding before placing next length. Bed pipe as shown on Drawings. Excavate bell/coupling holes or provide in the base material to receive the bell or coupling so that only the barrel of the pipe receives bearing pressure from the supporting material. Do not permanently support pipe or fittings on blocks, wedges, boards or stones.

3. When each pipe has been properly bedded, place and compact enough of the backfill material between the pipe and the sides of the trench to hold the pipe in correct alignment.

4. Close open ends of pipe by suitable temporary bulkheads to prevent entrance of earth and other materials when pipe laying is not in progress.

5. Take necessary precautions to prevent floatation of the pipe as a result of the water in the trench.

6. Assist Engineer as needed to run level checks on pipe slopes, and take ties.

7. Lay pipe to line and grade shown on the Drawings. If grade is not shown, determine elevations of start and finish points for each run of pipe. Lay pipe to a uniform grade between manholes. Line and grade may be adjusted by the Engineer as required by field conditions. Lay each pipe to form a close joint with the next adjoining pipe and bring the inverts continuously to the required line and grade.

8. Immediately lay pipe as soon as excavation is completed and the bedding material has been brought to the proper grade. Insert circular rubber gasket in the gasket seat provided and apply a thin film of gasket lubricant to the inside surface of the gasket. Clean spigot end of the pipe and enter into the rubber gasket in the bell, using care to keep the joint from contacting the ground. Complete joint shall then be completed by forcing the plain end to the seat of the bell. Pipe which is not furnished with a depth mark shall be marked before assembly to assure that the spigot end is inserted to the full depth of the joint.

9. Do not lay next length of pipe until the previous length has had sufficient material tamped about it to firmly secure it in place so as to prevent any movement or disturbance.

10. Do not lay pipe in water or when trench conditions or weather are unsuitable for such Work, except as approved by Engineer. Do not use installed pipe to remove water from Work area.

11. Lay pipe with the bell ends facing the direction of the laying unless otherwise permitted by the Engineer. Make joints per pipe manufacturers' recommendations.

12. Flush pipes and remove debris per method approved by Engineer. Gravity flushing is not acceptable.

13. Connections to manholes and catch basins: short length of pipe so that joints are located within 3 feet of inside surface of manholes and catch basins.

14. Use manufacturer recommended anti-floatation system for each pipe material.

E. Flexible Couplings: used and located as approved by Engineer.

1. Pipe Connections to New Manholes: use compression type flexible connector cast into the manhole wall or flexible boot connection per pipe manufacturer recommendations. Field coring of new manholes will not be allowed.

2. Pipe Connections to Existing Manholes: coring the existing manhole and installing a boot type flexible connector.

F. Pipe Cutting:

1. Where required, sections of pipe may be cut to provide shorter sections of pipe necessary for the construction. The cutting of the pipe shall be done in accordance with the pipe manufacturer's recommendations and subject to the approval of the Owner.

2. In general, the pipe material shall be cut by using a saw or milling process, approved by the pipe manufacturer. The pipe shall be cut, not broken. The cut end of the pipe shall be square to the axis of the pipe and any rough edges ground smooth.

3.03 FIELD QUALITY CONTROL

A. Provide in accordance with Division 01 General Requirements.

B. Subject pipe to thorough inspection and tests in accordance with the methods prescribed by, and acceptance or rejections e based on, applicable ASTM specifications. Pipes may be rejected at Site if non-conforming or damaged regardless of prior factory acceptance.

C. Remove and replaced damaged pipe found at no additional cost to the Owner.

3.04 CLEANING

A. Clean and flush piping after Work is completed and before final acceptance.

3.05 CLOSEOUT ACTIVITIES

A. Provide in accordance with Division 01 General Requirements.

END OF SECTION

This page intentionally left blank

SECTION 40 00 00

BASIC PROCESS MATERIALS AND METHODS

PART 1 – GENERAL

1.01 SUMMARY

A. Section Includes:

1. The general requirements for process equipment and appurtenances specified in Divisions 40 through 46 as well as general information and requirements which pertains to the Contract Drawings. Refer to the individual equipment and product specifications in Divisions 40 through 46 for additional details.

1.02 PRICE AND PAYMENT PROCEDURES

A. Measurement and payment requirements: per Division 01 General Requirements.

1.03 REFERENCES

A. The publications listed below form a part of this specification to the extent referenced. The publications are referred to within the text by the basic designation only. Unless otherwise noted, the most recent version of the listed publications, including revisions, at time of bid opening shall apply.

B. ASTM INTERNATIONAL (ASTM)

1. ASTM A 123/A 123M (2008) Standard Specification for Zinc (Hot-Dip Galvanized) Coatings on Iron and Steel Products

2. ASTM A 153/A 153M (2005) Standard Specification for Zinc Coating (Hot-Dip) on Iron and Steel Hardware

C. NATIONAL ELECTRICAL MANUFACTURERS ASSOCIATION (NEMA)

1. NEMA MG 1 (2007; Errata 2008) Standard for Motors and Generators

2. NEMA MG 11 (1977; R 2007) Energy Management Guide for Selection and Use of Single Phase Motors

1.04 ADMINISTRATIVE REQUIREMENTS

A. Coordination, Sequencing, and Scheduling: per Division 01 General Requirements.

1.05 SUBMITTALS

A. Submit in accordance with Division 01 General Requirements.

B. Product Data

1. Qualifications of Manufacturers
2. Warranties
3. Submittal Deviations
4. Contract Drawing Modifications
5. Special Tools
6. Spare Parts
7. Nameplates
8. Equipment Tag Nameplates
9. Field Painting of Equipment

C. All submittals shall include but are not limited to all deviations from the Contract Documents, any and all necessary modifications to the Contract Drawings, all special tools required for maintenance and operation, all spare parts required for normal maintenance of equipment during the Manufacturer's warranty period, and samples of information which will be included on equipment/tank nameplates.

D. The Contractor shall provide an engraved equipment tag nameplate on all equipment, (including associated instrumentation), bearing the alphanumeric tag number and the descriptive name of the equipment as it is referenced on the Drawings.

E. The Contractor shall provide a "coordinated process system color scheme" finished coating of all ferrous metallic and painted surfaces of new/existing equipment; including but not limited to pipes, valves, motors, gearboxes, supports, base plates, drive guards, enclosures, etc., and all associated appurtenances. All painting shall be in accordance with specification 09 90 00 Paints & Coatings.

1.06 QUALITY ASSURANCE

A. Provide in accordance with Division 01 General Requirements.

B. Qualifications: per Division 01 General Requirements and as follows:

1. All materials and equipment specified shall be the standard products of a Manufacturer regularly engaged in the production of such products and shall essentially duplicate items that have been in satisfactory use in identical applications in other waste water treatment facilities.

2. Unless otherwise indicated in the individual specification sections or indicated on the Drawings; the Manufacturer shall have a minimum of five (5) years of documented experience in the design and production of product(s)/equipment of all types, and not less than five (5) years of experience in the production of equal

or larger sized models of the exact product(s)/equipment specified in each individual section.

3. Unless otherwise specified or indicated on the Drawings, all product/equipment Manufacturer's shall provide an installation list of at least ten (10) similar United States installations, including contact names and phone numbers. Products/equipment shall be supported by a service organization that is, in the opinion of the Engineer, reasonably convenient to the site to ensure parts and service can be acquired in a timely fashion.

4. The term "installations" shall mean individual projects/contracts. Multiple equipment units for a project will be considered as one (1) installation toward meeting the experience requirements. Installations shall be only those in the United States (fifty contiguous states). "Installations" shall include but are not limited to the following:

   a. Name and location of installation.

   b. Name of person in direct responsible charge for the product(s) and/or equipment.

   c. Address and phone number of person in direct responsible charge.

   d. Month and year the equipment was placed in operation.

   e. Brief description of equipment

   f. Provide the name, address, and phone number of the contact person at the company that provided service (both warranty period and post-warranty period) for the unit to the Owner.

5. To ensure quality, conformance, and reliability with regard to the manufacturing and production of the equipment, the Manufacturer shall meet or exceed all the requirements outlined in the Contract Documents for each respective product and/or piece of equipment.

1.07 DELIVERY, STORAGE, AND HANDLING

A. Provide in accordance with Division 01 General Requirements.

B. The equipment Manufacturers shall coat all machined surfaces subject to corrosion with an easily removable rust preventive compound prior to shipment. Ship fabricated assemblies in the largest sections permitted by carrier regulations. All products shall be properly labeled to ensure proper field erection. Deliver all equipment in the Manufacturer's original, unopened and undamaged packages, unless mounted on the respective equipment assembles. The Contractor shall store and maintain all equipment in strict accordance with the Manufacturer's written short term and long term storage requirements.

C. The Contractor shall store all products in a manner to protect items with epoxy shop coatings from exposure to UV light which may cause chalking of the epoxy. Length of acceptable exposure prior to providing UV protective measures shall be in accordance with the coating Manufacturer's recommendations. This shall include protection from UV light after installation while awaiting covering or filling of tanks, or prior to field painting for items scheduled to be "finish coated". Should damage occur, the Contractor shall immediately make all repairs and replacements necessary to the satisfaction of the Engineer at no additional cost to the Owner.

1.08 SITE CONDITIONS

A. Existing Conditions: per Division 01 General Requirements.

1.09 MAINTENANCE

A. Extra Materials: Furnish as specified below. Make interchangeable with and same material and workmanship as corresponding original parts.

1.10 WARRANTIES

A. The Manufacturer of each piece of equipment shall provide a full & comprehensive warranty for all equipment as specified in Divisions 40 through 46. Unless otherwise specified or indicated on the Drawings, the equipment shall be warrantied to be free from defects in workmanship, design, and materials for a minimum period of one (1) year. If the Manufacturer's standard warranty is greater than one (1) year; (e.g. two (2) years, etc.); then that warranty shall be provided as standard. In no case shall the warranty for any equipment and/or products be less than one (1) year. If any parts of the equipment supplied under this section should fail during the Manufacturer's warranty period, replacement of parts or the unit itself shall be provided. The units shall be restored to active working service at no expense to the Owner of the equipment. The Manufacturer shall incur all costs including but not limited to parts, labor, service, technicians, shipping, and handling required for restoration of equipment to active service as required under the Manufacturer's warranty.

B. Warranties shall commence at the date of substantial completion or partial utilization.

C. The Contractor shall obtain a warranty from the equipment Manufacturers in the name of the Owner. The Contractor shall submit the equipment Manufacturer's warranties to the Engineer for review. Equipment that is supplied by a system supplier and is intended to function as a complete and integrated system shall be warrantied as set forth in each specification section. The Contractor shall be required to coordinate and rectify all warranty problems during the one (1) year warranty period following substantial completion.

1.11 NAMED PRODUCT AND EQUIPMENT MANUFACTURERS

A. Acceptable manufacturers may be listed in each specification section within Divisions 40 through 46. Manufacturer's names listed in each specification within Division 40

through 46 are intended to indicate the type and quality of materials desired. Where the words "Engineer Approved Equal" are indicated, other Manufacturers of equal quality that "Comply Fully" with the Contract Documents shall be allowed.

B. The Contract Documents direct attention to certain required features of the equipment but do not purport to cover all details entering into its design and construction. Nevertheless, provide products and/or equipment complete in all details and ready for operation for the intended purpose.

C. The Specifications in Divisions 40 through 46 are intended to provide standard products and/or equipment of a recognized Manufacturer meeting all the requirements of the Contract Documents. Due to differences in equipment and/or products of various Manufacturers, provide complete and detailed submittals for the Engineer to review.

D. All equipment and/or products of the same type, style, and duty shall be supplied by a single Manufacturer. All Manufacturers named or otherwise shall comply completely with the Contract Documents. The Contract Drawings are typically based upon a single product and/or piece of equipment. As such, the physical installation, all services, all connections, and all appurtenances are designed around the characteristics of a single product and/or piece of equipment. Other named Manufacturers of products and/or equipment as well as "Engineer Approved Equal" Manufacturers will be considered.

E. However, "Named" Manufacturers' products and/or equipment other than the "Design Basis"; as well as "Engineer Approved Equal" Manufacturers' products and equipment will differ slightly from the Contract Documents. Modifications, including but not limited to, piping, wiring, controls, foundations, other services, and structures shall be required. Coordinate these modifications with the Engineer. Any additional costs required for these modifications shall be at no additional cost to the Owner or Engineer. No change in Contract Time shall be granted for these modifications.

1.12 SUBMITTAL DEVIATIONS

A. Provide submittals to the Engineer of all products and/or equipment for compliance with the Contract Documents. Submittals for "Design Basis" products; "Named" products and/or equipment other than the design basis; as well as "Engineer Approved Equal" products and/or equipment shall specifically outline "All" deviations from the Contract Documents. Submittals which do not specifically outline "All" deviations from the Contract Documents will be "Rejected".

PART 2 – PRODUCTS

2.01 GENERAL ELECTRICAL REQUIREMENTS

A. The Contractor shall furnish motors, with their respective pieces of equipment. Motors and controllers shall conform to and have electrical connections as described in the Contract Documents. Furnish internal wiring for components of packaged equipment as an integral part of the equipment. Extended voltage range motors shall not be permitted under any circumstances.

B. Controllers and contactors shall have a maximum of 120 volt control circuits, and shall have auxiliary contacts for use with the controls furnished. All electrical work shall conform to NFPA 70 standards and the Contract Documents.

2.02 ELECTRICAL CLASSIFICATIONS AND HAZARD RATINGS

A. Electrical information including but not limited to motor horsepower values, voltage, phase, cycle, hazard classification rating, inverter duty, etc., have been listed for each respective product and/or piece of equipment in the respective specification sections for ease in bidding, construction, reference, and submittal review.

B. The Contract Documents specifically outline electrical hazard classifications by area. In the case that a discrepancy between the hazard classification listed in the respective product and/or equipment section and the Contract Documents or Specifications should arise; the Drawings shall govern the electrical hazard classification of the associated equipment/product and all related appurtenances. It shall be the responsibility of the Contractor and the product/equipment Manufacturers to ensure all such items furnished meet the electrical hazard classification ratings which are shown on the Contract Drawings or as indicated in the Specifications.

2.03 ELECTRIC MOTORS - GENERAL

A. Unless otherwise specified or indicated on the Drawings, all electric motors shall conform to the requirements hereinafter set forth. All electric motors shall be of sufficient capacity to operate the products and/or equipment under all load and operating conditions without exceeding rated nameplate current, power, or specified temperature limit.

B. When the horsepower rating is specified for a motor, the motor furnished shall meet the requirements of the output specified. In the event a horsepower rating is not specified, the motor provided shall have sufficient capacity to operate the driven products/equipment as outlined in the detailed Specifications.

C. All electric motors shall have either UL or FM approval ratings. All electric motors shall have a minimum service factor of 1.15, unless otherwise specified or indicated on the Drawings. Motors for use with variable frequency drives shall have a minimum service factor of 1.15 as be specifically designed for "Inverter Duty Service".

2.04 ELECTRIC MOTOR DESIGN STANDARDS

A. Unless otherwise indicated, all motors shall be NEMA Design B. Motors shall have starting characteristics and ruggedness as required under the actual conditions of operation and, unless otherwise specified, shall be suitable for full-voltage starting.

B. All electric motors shall be manufactured by General Electric Co., Baldor-Reliance, Toshiba, Siemens, WEG or an "Engineer Approved Equal" product that meets all the specified requirements herein.

C. Unless otherwise indicated, all electric motors shall have Class F insulation with a temperature rise in accordance with NEMA Standards at a maximum ambient temperature of 40 degrees C.

D. Provide electric motors rated for "Explosion Proof" service in all electrically classified areas Class 1 Division 1 or 2 and comply with all requirements of Class 1, Division 1, Groups C&D, as defined by the National Electrical Code, as well as all other safety codes pertaining thereto.

E. Unless otherwise indicated, all electric motors shall be "Premium Efficiency" type. The nominal and/or minimum guaranteed efficiency shall be specifically printed on the motor nameplate. The values shall conform to NEMA standards for "Premium Efficiency" motors.

2.05 GENERAL DESIGN OF MOTORS

A. Electric motors shall comply with the latest NEMA Standards for Motors and Generators, unless otherwise specified or indicted on the Drawings. Motor windings shall be braced to withstand successfully the stresses resulting from the specific method of starting. The windings shall be treated thoroughly with acceptable insulating compound suitable for protection against moisture, acidic or alkaline conditions. All motor bearings shall be of the self-lubricating type, designed to ensure proper alignment of rotor and shaft and to prevent leakage of lubricant.

B. All bearings for open motors shall be of the sleeve or ball type, as specified under the respective items of mechanical products/equipment. Bearings for "Totally Enclosed" and "Explosion Proof" motors shall be ball type. Vertical motors shall be provided with thrust bearings adequate for all potential thrust forces which could be subjected to the motors during operation.

C. Vertical electric motors of the open type shall be provided with drip hoods of acceptable shape and construction. If the drip hood is too heavy to be easily removed the drip hood shall be designed and constructed with provisions for access for testing.

2.06 WOUND ROTOR INDUCTION MOTORS

A. Wound rotor electric induction motors shall be designed for operation of the motor-driven equipment under the conditions specified in the Contract Documents. Motors shall be of the wound-rotor, induction type suitable for speed control by rotor resistance. The collector rings shall be constructed of hard composition metal of sufficient conductivity and ample contact surface. The rings shall be mounted accurately and securely on the shaft by means of acceptable insulating construction. The leads to the collector rings shall be fastened to and insulated from the shaft.

B. The collector rings and brushes for the wound-rotor induction motors shall be suitable for operation in atmospheres containing moisture. The brushes shall be of the electrographite type, or other suitable type, of sufficient hardness and conductivity with ample contact surfaces. Brush holders shall be provided with adjustable, spring-tension

devices. Brushes shall be connected to the holders with tinned, flexible, copper-wire pigtails so arranged that no appreciable current shall be carried through the sliding contacts or springs. Brushes shall operate without noise or chattering. Rings and brushes shall be located on top of the motor, and shall be easily accessible for inspection and maintenance.

2.07 SYNCHRONOUS MOTORS

A. Synchronous motors shall comply in all respects with the latest NEMA Standards for Motors and Generators, and ANSI Standard C50 for Rotating Electrical Machinery. Synchronous motors shall be designed for operation of the motor-driven equipment under the conditions dictated in the Detail Specifications. The temperature rise shall be based on a cooling temperature not exceeding 40 degrees C and an altitude not exceeding 3,300 feet in the various parts of the motors, when operating continuously at rated voltage, frequency, and power factor, shall conform to the applicable requirements of NEMA Standards.

2.08 SINGLE PHASE MOTORS

A. Unless otherwise indicated, single-phase fractional-horsepower alternating-current motors shall be "High Efficiency" type corresponding to the applications listed in NEMA MG 11 standards.

B. Single-phase motors requiring switching devices and auxiliary starting resistors, capacitors, or reactors shall be furnished as combination units with such auxiliaries either incorporated within the motor housings or housed in suitable enclosures mounted upon the motor frames. Each combination unit shall be mounted upon a single base and shall be provided with a single conduit box.

2.09 INVERTER DUTY MOTORS

A. Electric motors which are rated for inverter duty shall be provided for all applications where used with variable frequency drives. All motors shall be suitable for operation over the entire speed range indicated without causing motor overheating at any condition. Forced ventilation type inverter duty rated motors with a separate external continuously operating fan shall not be acceptable. Inverter duty motors installed in a Class 1, Division 1, Groups C&D hazardous, "Classified" locations shall be identified and be specifically designed for variable speed when used in "Classified" locations.

B. Inverter duty motors shall have Class F insulation with a Class B temperature rise and shall be motor nameplated, stamped and labeled as "Inverter Duty Rated". All motors shall be designed with a minimum service factor of 1.15. Motors shall be wound with inverter duty wire and phase paper and shall be multi-dipped and baked in polyester, Class H varnish.

C. All inverter duty motors (motors run by VFD's) shall be equipped with a grounding ring to eliminate VFD induced bearing currents. Permanent magnet DC motors shall not require a grounding ring. The grounding ring shall eliminate all destructive

electrical currents which manifest themselves through pitting of the bearings, scoring of the shaft, and eventual bearing failure.

D. When motors are controlled by PWM variable frequency drives (VFDs) the pulse switching causes high dv/dt (high frequency voltage changes) which results in a capacitive induced shaft voltage. These voltages may cause bearing failures and substantially decrease bearing life by electrically discharging through the motor bearings to ground causing pitting and fluting failure. In accordance with NEMA MG 1 standards, the capacitive induced voltage results in peak pulses as high as 10-40 volts from the motor shaft to ground. Mitigation for all inverter duty motor bearing damage shall be provided by shaft grounding brushes which shall divert all current around the motor bearings.

E. All motors controlled by Variable Frequency Drives (VFD's) shall be equipped with a shaft grounding ring kit. The grounding ring kit shall be installed by the motor Manufacturer or equipment Manufacturer. Each shaft grounding Ring (SGR) shall be bolted directly to the motor end bracket or installed with conductive epoxy to ensure ground connection from the grounding ring to the motor frame.

F. All grounding rings of the same type, style, and duty shall be supplied by a single Manufacturer. All Manufacturers named or otherwise shall comply completely with the Contract Documents. All inverter duty motor grounding rings shall be a product of the following Manufacturer:

1. AEGIS SGR Bearing Protection Ring

2. Engineer Approved Equal

2.10 DRIVE COUPLINGS

A. All drive couplings shall be all metallic, flexible, and designed for both angular and parallel misalignment. Drive couplings shall be provided with guards and a means for lubrication. Close-coupled connections shall have machined shouldered joints for the motor and pump motor support. High torque couplings shall be all metal gear couplings with external grease fittings. A service factor of 1.50 shall be used based on the motor nameplate rating.

B. Drive couplings for mixers which differ from the above referenced coupling types shall be of metallic construction. Couplings shall be standard integral parts of mixer Manufacturer's equipment.

2.11 BELT DRIVES

A. All v-belt drives shall be provided with front removable guards.

B. Removing of the guards shall not require disturbing of the sheaves. All belt drive assemblies shall be designed for up-sizing and/or downsizing the sheaving. All belt drives shall be designed for a minimum 1.5 service factor, unless otherwise indicated.

C. Variable-speed transmission in belt drive systems shall consist of a self-contained drive, totally enclosed variable speed motor, a housing on which the motor is mounted and which encloses an adjustable, heavy duty v-belt drive between two variable-pitch pulleys and the output shaft.

2.12 SCR CONTROLLERS

A. All SCR controllers shall be completely solid state assemblies consisting of an electronic switching amplifier, silicon controlled full wave rectifier, and associated circuitry. Bridge and gate trigger circuitry shall employ printed circuit boards. Provide all required power transformers. All SCR units shall be heavy duty type suitable for handling the full current rating of the motors and brief acceleration currents. The assembly shall be mounted on a heat sink but insulated there from.

B. Power supply to the SCR controllers shall be 115 volt, single phase, 60 hertz. Each unit shall be factory wired and tested with all leads brought out to terminal strips to facilitate connections to the motors and local control stations. Each SCR controller shall be designed and constructed with functionality including but not limited to the following:

1. Full wave rectification.
2. Power cube containing all power semi-conductors in a single component.
3. Annature contactor with auxiliary normally open and normally closed contacts.
4. Circuit breaker to provide overload protection.
5. Surge suppressers to protect semi-conductors from line surges and transient voltages.
6. Adjustable current limit.
7. Adjustable IR compensation.
8. Voltage level and current capacities shall meet the requirements of the connected equipment (e.g. 90V DC output for 90V DC motors).

2.13 GEAR REDUCTION UNITS

A. Gears of gear reduction units shall be manufactured of alloys treated for hardness and rated for severe service duty. All gear reduction units on equipment shall be selected for a minimum Class II service, as classified by the American Gear Manufacturers Association (AGMA).

B. Unless otherwise specified, the complete reduction unit shall be fully enclosed in a heavy cast-iron or fabricated steel housing with gears running in oil. All bearings shall be anti-friction type.

C. The actual and rated horsepower, torque, overhang capacity, or bearing capacity of each reduction unit shall be not less than the horsepower rating of the drive motor, nor less than that which will be encountered under full load or under the most severe loading conditions of the equipment.

D. Unless otherwise specified, all gear reduction units shall be helical or spiral bevel helical combinations. Planetary gear units and worm gear type units shall be used only where specified. Class of service shall be Class II or heavier, as determined by the Manufacturer or as directed by the Engineer.

E. The equipment Manufacturer shall furnish the Engineer with complete, detailed, information, catalog data, design features, loading capacities, and mechanical efficiency ratings for every gear reduction unit incorporated in the work.

2.14 LUBRICATION FITTINGS

A. All lubrication fittings shall be readily accessible from the outside of all equipment, without the need to remove covers, plates, housings, or guards, or without creating falling hazards by unusual elevations. All lubrication fittings shall be buttonhead type. All lubrication fittings shall be mounted together wherever possible.

B. Pressure grease lubricated fittings shall be "Zerk Hydraulic" type or "Alemite" type. Housings of grease-lubricated bearings shall be automatically exhausted to the atmosphere to prevent over-greasing.

C. All oil drains shall be piped to a location outside of equipment frames for ease of draining. Provide a 316 stainless steel ball valve for positive shutoff. All drain piping shall be 316 stainless steel tubing.

2.15 SPECIAL TOOLS

A. Each Manufacturer shall furnish one set of all special tools required to completely assemble, disassemble, or maintain their respective pieces of equipment or systems. Special tools shall refer to oversized or specially dimensioned tools, special attachments or fixtures, or any similar items.

2.16 SPARE PARTS

A. For each piece of equipment furnished, provide spare parts, as specified in the respective specification sections of each Division. All spare parts shall be delivered at the same time as the equipment to which they pertain. The Contractor shall properly store and safeguard such spare parts until completion of the work, at which time they shall be delivered to the Owner. All spare parts shall be appropriately labeled and shall be properly packaged for long-term storage.

2.17 EQUIPMENT DRIVE GUARDS

A. All equipment driven by open shafts, belts, chains, or gears shall be provided with metallic or rigid fiberglass OSHA approved guards enclosing the drive mechanism. Guards shall be securely installed but shall be "easily" removable with quick open latches. Guards shall be constructed of two part epoxy coated sheet steel, epoxy coated steel woven wire, or expanded metal set in a frame of epoxy coated steel members, unless otherwise specified.

B. All guards shall be secured in position by stainless steel braces or straps which shall permit "Easy" removal for servicing the respective equipment. All guards shall conform in all respects to all applicable safety codes, OSHA standards, and local regulations.

2.18 NAMEPLATES

A. Each piece of equipment shall be provided with a 304 stainless steel nameplate, securely fastened in place with 316 stainless steel hardware. All nameplates shall be clearly and permanently inscribed with the Manufacturer's name, model or type designation, serial number, principal rated capacities, electrical or other power characteristics, and similar information as appropriate.

B. Nameplates for process chemical storage tanks shall be non-metallic and resistant to the chemical being stored. Chemical storage tank nameplates shall include but are not limited to the following information; Manufacturer's name, serial number, rated capacity, name/tag number, etc.

C. An enlarged paper copy of all nameplate data on equipment and motors shall be provided in the submittals as well as the Operation and Maintenance Manuals.

2.19 EQUIPMENT TAG NAMEPLATES

A. Each item of equipment (including all instrumentation) shall have an engraved nameplate bearing the alphanumeric tag number and the descriptive name of the equipment as it is referenced on the Drawings. The nameplate shall be securely affixed in a conspicuous place as approved by the Engineer and Owner. The Contractor shall coordinate the final tag numbers and descriptive names with the Engineer prior to ordering. The Contractor shall install all equipment tag nameplates in a location as directed by the Engineer and Owner.

B. All nameplates shall be resistant to abrasion, heat, and chemicals. Each nameplate shall be manufactured from stain resistant multi-layered acrylic specifically designed for both indoor and outdoor applications. Each nameplate shall be a minimum of 1/16 inch thick, 3-ply, scratch resistant, low glare satin phenolic finish. All nameplates shall conform to Mil Spec LP-387A Type N.D.P. LP 509. The nameplates shall be manufactured of a rigid thermoset material which is electrically non-conductive (lamicoid). Provide contrasting background and lettering colors as selected by the Engineer and Owner.

2.20 FASTENERS AND HARDWARE

A. Provide all necessary fasteners and hardware including but not limited to bolts, anchor bolts, nuts, washers, lock washers, locking nuts, plates, bolt sleeves, etc. as required by the work outlined in the Contract Documents. All anchor bolts shall have suitable washers, lock washers and, where so required, their nuts shall be hexagonal.

B. All fasteners and hardware shall be a minimum of 304L grade stainless steel unless otherwise specified or shown on the Drawings. All fasteners and hardware utilized in "Submerged Applications" shall be 316L grade stainless steel. All fasteners and hardware in areas including but not limited to the headworks, dewatering rooms, chemical rooms, clarifiers, process tankage, splitter structures, septage areas, equalization tanks, storage tanks, valve vaults, wet wells, chlorine contact tanks, etc., shall be 316 grade stainless steel.

C. Expansion bolts shall have stainless steel composition elements of the required number of units and size. All threads shall be clean cut and shall conform to ANSI B 1.1 for Unified Inch Screw Threads (UN and UNR Thread Form).

D. All fasteners and hardware specified to be galvanized, shall be zinc coated, after being threaded, by the hot-dip process in conformity with the latest revisions of ASTM A 123/A 123M or ASTM A 153/A 153M standards. Galvanized fasteners and hardware shall only be utilized where specified or indicated in the Contract Documents.

E. All anchor bolts and expansion bolts shall be set accurately. If anchor bolts are set before the finished concrete has been placed, they shall be carefully held in suitable templates of Engineer approved design. Where indicated on the Drawings, specified, or as required, anchor bolts shall be provided with square plates at least 4 inches by 4 inches by 3/8 inches or shall have square heads and washers and be set in the concrete forms with suitable pipe sleeves, or both. If anchor or expansion bolts are set after the concrete has been placed, all necessary drilling and grouting or caulking shall be provided by the Contractor and care shall be taken not to damage the structure or finish by cracking, chipping, spalling, or otherwise during the installation.

F. All fasteners and hardware shall be suitable size for the intended purpose, with direct input from the equipment or product Manufacturer. In no case shall anchor bolts have a diameter less than 3/8 inches.

2.21 OILS AND LUBRICANTS

A. Prior to startup and testing, the Contractor shall ensure all motor driven equipment and appurtenances are provided with the appropriate oils and lubricants. The respective equipment Manufacturer's shall provide detailed instructions for proper lubrication and oil filling of all products. The use of special and/or proprietary oils and lubricants shall not be acceptable under any circumstances. All oils and lubricants shall be readily available from a local source within the United States to ensure ease of maintenance for the Owner. Provide oils and lubricants of types and grades as recommended by the

respective equipment manufacturers for startup, testing and initial operation of equipment.

PART 3 – EXECUTION

3.01 INSPECTION

A. The Contractor shall carefully inspect receiving structures and anchor supports for defects in workmanship prior to arrival of all equipment. Carefully inspect all equipment for any damage in shipping, defects in workmanship and materials, and tightness of all fastening hardware.

B. The Contractor shall examine all equipment upon delivery for structural soundness, correctness of setting, alignment, and relative arrangement of various parts, adequacy and correctness of packing, sealing and lubricants.

C. Prior to startup and testing, the Contractor shall ensure all motor driven equipment and appurtenances are furnished with the appropriate oils and lubricants. Provide all oils and lubricants in strict accordance with the recommendations of the respective equipment Manufacturer.

3.02 FIELD PAINTING OF EQUIPMENT

A. All field painting shall be provided by the Contractor. All ferrous metallic and painted surfaces of new/existing equipment; including but not limited to pipes, valves, motors, gearboxes, supports, base plates, drive guards, enclosures, etc., and all associated appurtenances shall be provided with a corrosion resistant field applied finished coating system with a "coordinated process system" color scheme.

B. For retrofit projects the color scheme shall match the existing designations for each process system. In all cases (New/Retrofit), the color for each process system shall be as directed by the Engineer. Field applied coatings shall be in accordance with section 09 90 00 PAINTS AND COATINGS. Stainless steel, brass, bronze, plastic, and galvanized surfaces shall not be painted unless specifically indicated or directed by the Engineer.

3.03 FACTORY PAINTING

A. The Manufacturer's standard factory painting systems shall be provided, unless otherwise specified or indicated on the Drawings. The Manufacturer shall provide a certification that the factory painting system applied for equipment located indoors shall withstand 125 hours in a salt-spray fog test. Equipment located outdoors shall withstand 500 hours in a salt-spray fog test. Salt-spray fog test shall be in accordance with ASTM B 117 standards.

B. Immediately after completion of the testing, the paint shall show no signs of blistering, wrinkling, cracking, or loss of adhesion. The paint shall show no signs of rust creepage beyond 0.125 inches on either side of the scratch mark.

C. The film thickness of the factory painting system applied on the equipment shall not be less than the film thickness used on the test specimen. All Manufacturers' standard factory painting systems shall be designed for the maximum surface temperatures expected to occur on each respective piece of equipment.

3.04 FACTORY PAINTING OF METALLIC SURFACES

A. Clean, pre-treat, prime and paint all metal surfaces. Stainless steel, aluminum, brass, bronze, copper, and plastic surfaces shall not be painted unless specifically indicated in the Contract Documents. Apply all coatings to clean dry surfaces. Clean all surfaces to remove dust, dirt, rust, oil and grease prior to application of paint. Surfaces subject to temperatures in excess of 120 degrees F shall be cleaned to bare metal prior to painting.

B. Where more than one coat of paint is required, apply the second coat after the preceding coat is thoroughly dry. Lightly sand damaged painting and retouch before applying the succeeding coat. Color of finish coat shall be the Manufacturer's standard unless otherwise specified or indicated on the Drawings.

3.05 COATING THICKNESSES

A. All metallic surfaces which are designed to experience temperatures less than 120 degrees F shall receive one coat of epoxy pretreatment primer applied to a minimum dry film thickness of 0.3 mils, one coat of epoxy primer applied to a minimum dry film thickness of 1.0 mils; and two coats of epoxy applied to a minimum dry film thickness of 1.0 mils per coat.

B. All metallic surfaces which are designed to experience temperatures between 120 and 400 Degrees F shall receive two coats of 400 degrees F heat-resisting epoxy applied to a total minimum thickness of 2.0 mils.

C. All metallic surfaces which are designed to experience temperatures greater than 400 degrees F shall receive two coats of 1,000 degrees F heat-resisting epoxy paint applied to a total minimum dry film thickness of 2.0 mils.

3.06 INSTALLATION

A. The Contractor shall install all equipment in accordance with the Manufacturer's requirements. Do not install any equipment until all defects or inadequacies in receiving structures have been corrected to meet the design as noted in the Contract Documents. Erect and lubricate all products/equipment in strict accordance with the Manufacturer's instructions. Installation shall include providing all oils and grease required for proper operation.

B. All equipment mechanisms shall withstand all stresses that may occur during fabrication, erection, intermittent or continuous operation. The Contractor shall furnish and install all supports as indicated on the Drawings, and as required by the equipment Manufacturer.

C. Thoroughly clean all equipment and appurtenant piping to remove all dirt, grease, mill scale, tools, dust and other foreign matter. The Contractor shall touch up all factory finishes to the satisfaction of the Engineer.

3.07 INSTRUCTION TO OWNER'S PERSONNEL

A. Where specified in other sections, the Manufacturer shall furnish the services of competent representatives to give full instruction to the designated Owner's personnel in the adjustment, operation, and maintenance, pertinent safety requirements, etc., of the specified equipment or systems. Instructors/representatives shall be thoroughly familiar with all parts of the installation and shall be trained in operating theory, controls, electrical requirements, practical operation, and maintenance work.

B. Instruction shall be given during the first regular work week after the equipment or system has been accepted and turned over to the Owner for regular operation. The number of man-days, (8 hours per day), of instruction furnished shall be as specified for each respective piece of equipment or system. When more than 4 man-days of instruction are specified, approximately half of the time shall be used for classroom instruction. The other half of the time shall be used for field instruction/demonstration with the equipment or system.

C. When significant changes or modifications in the equipment or system are made under the terms of the Contract, the Manufacturer shall provide additional instruction to acquaint the operating personnel with the changes and/or modifications to the equipment or system. Additional instruction shall be at no cost to the Owner.

D. Only one Startup, Testing or Training session shall be scheduled in a single day. A minimum of 72 hours of prior notice shall be provided prior to testing and training.

END OF SECTION

SECTION 40 05 13

PROCESS PIPE AND FITTINGS

PART 1 – GENERAL

1.01 SUMMARY

A. Provide process pipe and fittings as shown on the Drawings and as specified herein and/or are required to complete the work outlined in the Contract Documents in accordance with this Section and applicable reference standards listed in Article 1.03. Provide all related appurtenances, including but not limited to attachments, foundations, anchors, supports, couplings, restraints and all related accessories to provide complete operational piping systems. Process pipe shall include all interior and exterior piping systems.

B. Related Requirements

1. 31 00 00 - Earthwork
2. 40 05 14 – Process Pipe Couplings & Connectors
3. 40 05 15 – Process Pipe Supports
4. 40 05 17 – Process Pipe Sleeves & Seals
5. 40 05 23 – Process Valves & Strainers
6. 40 90 00 – Instrumentation and Control for Process Systems
7. 43 21 00 – Vertical Turbine Pumps

1.02 PRICE AND PAYMENT PROCEDURES

A. Measurement and payment requirements: per Division 01 General Requirements.

1.03 REFERENCES

A. Reference Standards: The publications listed below form a part of this specification to the extent referenced. The publications are referred to within the text by the basic designation only. Unless otherwise noted, the most recent version of the listed publications, including revisions, at time of bid opening shall apply.

A. ASME INTERNATIONAL (ASME)

1. ASME A13.1 (1996, E1998) Scheme for the Identification of Piping Systems

2. ASME B1.1 (2003; R 2008) Unified Inch Screw Threads (UN and UNR Thread Form)

3. ASME B16.1 (1998) Cast Iron Pipe Flanges and Flanged Fittings Classes 25, 125, and 250

4. ASME B16.3 (1999) Malleable Iron Threaded Fittings Classes 150 and 300

5. ASME B16.18 (2001; R 2005) Cast Copper Alloy Solder Joint Pressure Fittings

6. ASME B16.26 (2006) Standard for Cast Copper Alloy Fittings for Flared Copper Tubes

7. ASME B16.15 (2006) Cast Bronze Threaded Fittings Classes 125 and 250

8. ASME B1.20.1 (1983; R 2006) Pipe Threads, General Purpose (Inch)

9. ASME B16.9 (2001) Factory-Made Wrought Buttwelding Fittings

10. ASME B16.26 (2006) Standard for Cast Copper Alloy Fittings for Flared Copper Tubes

11. ASME B16.2 (2005) Nonmetallic Flat Gaskets for Pipe Flanges

12. ASME B16.22 (2001) Wrought Copper and Copper Alloy Solder Joint Pressure Fittings

13. ASME B31.1 (2001) Power Piping

14. ASME B31.3 (2001) Process Piping

B. ASTM INTERNATIONAL (ASTM)

1. ASTM A 53 (2002) Standard Specification for Pipe, Steel, Black and Hot-Dipped, Zinc-Coated, Welded and Seamless

2. ASTM A 153/A 153M (2005) Standard Specification for Zinc Coating (Hot-Dip) on Iron and Steel Hardware

3. ASTM A 181 (2001) Standard Specification for Carbon Steel Forgings, for General-Purpose Piping

4. ASTM A 193/A 193M (2008b) Standard Specification for Alloy-Steel and Stainless Steel Bolting Materials for High-Temperature Service

5. ASTM A 197 (2001) Standard Specification for Cupola Malleable Iron

6. ASTM A 234 (2002) Standard Specification for Piping Fittings of Wrought Carbon Steel and Alloy Steel for Moderate and High Temperature Service

7. ASTM A 240 (2001) Heat-Resisting Chromium and Chromium-Nickel Stainless Steel Plate, Sheet, and Strip for Pressure Vessels

8. ASTM A 269 (2008) Standard Specification for Seamless and Welded Austenitic Stainless Steel Tubing for General Service

9. ASTM A 307 (2007b) Standard Specification for Carbon Steel Bolts and Studs, 60 000 PSI Tensile Strength

10. ASTM A 312/A 312M (2008a) Standard Specification for Seamless, Welded, and Heavily Worked Austenitic Stainless Steel Pipes

11. ASTM A 380 (2006) Standard Practice for Cleaning, Descaling, and Passivation of Stainless Steel Parts, Equipment, and Systems

12. ASTM A 47/A 47M (1999; R 2004) Standard Specification for Steel Sheet, Aluminum-Coated, by the Hot-Dip Process

13. ASTM A 479/A 479M (2008) Standard Specification for Stainless Steel Bars and Shapes for Use in Boilers and Other Pressure Vessels

14. ASTM A 733 (2003) Standard Specification for Welded and Seamless Carbon Steel and Austenitic Stainless Steel Pipe Nipples

15. ASTM A 774/A 774M (2006) Standard Specification for As-Welded Wrought Austenitic Stainless Steel Fittings for General Corrosive Service at Low and Moderate Temperatures

16. ASTM A 778 (2001) Standard Specification for Welded, Unannealed Austenitic Stainless Steel Tubular Products

17. ASTM B 117 (2007a) Standing Practice for Operating Salt Spray (Fog) Apparatus

18. ASTM B 61 (2008) Standard Specification for Steam or Valve Bronze Castings

19. ASTM B 62 (2002) Standard Specification for Composition Bronze or Ounce Metal Castings

20. ASTM B 68 Standard Specification for Seamless Copper Tube, Bright Annealed

21. ASTM B 75 Standard Specification for Seamless Copper Water Tube

22. ASTM B 88 (2003) Standard Specification for Seamless Copper Water Tube

23. ASTM C 150 (2007) Standard Specification for Portland Cement

24. ASTM D 1238 (2004c) Melt Flow Rates of Thermoplastics by Extrusion Plastometer

25. ASTM D 1248 (2005) Standard Specification for Polyethylene Plastics Extrusion Materials for Wire and Cable

26. ASTM D 1598 (2002; R 2008) Time-to-Failure of Plastic Pipe Under Constant Internal Pressure

27. ASTM D 1599 (2005) Resistance to Short-Time Hydraulic Failure Pressure of Plastic Pipe, Tubing, and Fittings

28. ASTM D 1784 (1999) Standard Specification for Rigid Poly(Vinyl Chloride) (PVC) Compounds and Chlorinated Poly(Vinyl Chloride) (CPVC) Compounds

29. ASTM D 1785 (1999) Standard Specification for Poly(Vinyl Chloride) (PVC) Plastic Pipe, Schedules 40, 80, and 120

30. ASTM D 2235 (2001) Standard Specification for Solvent Cement for Acrylonitrile-Butadiene-Styrene (ABS) Plastic Pipe and Fittings

31. ASTM D 2239 (2003) Standard Specification for Polyethylene (PE) Plastic Pipe (SIDR-PR) Based on Controlled Inside Diameter

32. ASTM D 2464 (1999) Standard Specification for Threaded Poly (Vinyl Chloride) (PVC) Plastic Pipe Fittings, Schedule 80

33. ASTM D 2466 (2002) Standard Specification for Poly (Vinyl Chloride) (PVC) Plastic Pipe Fittings, Schedule 40

34. ASTM D 2467 (2006) Standard Specification for Poly(Vinyl Chloride) (PVC) Plastic Pipe Fittings, Schedule 80

35. ASTM D 2564 (2004e1) Standard Specification for Solvent Cements for Poly(Vinyl Chloride) (PVC) Plastic Piping Systems

36. ASTM E 96/E 96M (2005) Standard Test Methods for Water Vapor Transmission of Materials

37. ASTM F 402 (1993, R1999) Standard Practice for Safe Handling of Solvent Cements, Primers, and Cleaners Used for Joining Thermoplastic Pipe and Fittings

38. ASTM A 530/A 530M (2004a) General Requirements for Specialized Carbon and Alloy Steel Pipe

39. ASTM A 632 (2004) Standard Specification for Seamless and Welded Austenitic Stainless Steel Tubing (Small-Diameter) for General Service

40. ASTM F 493 (2004) Solvent Cements for Chlorinated Poly(Vinyl Chloride) (CPVC) Plastic Pipe and Fittings

41. ASTM F 593 (2002; R 2008) Stainless Steel Bolts, Hex Cap Screws, and Studs

42. ASTM F 594 (2008) Standard Specification for Stainless Steel Nuts

C. AMERICAN WATER WORKS ASSOCIATION (AWWA)

1. AWWA C104/A21.4 (2003) Cement-Mortar Lining for Ductile-Iron Pipe and Fittings for Water

2. ANSI/AWWA C110/A21.10 (1998) Ductile-Iron and Gray-Iron Fittings, 3 in through 48 in (75 mm through 1200 mm), for Water and Other Liquids

3. ANSI/AWWA C111/A21.11 (2000) Rubber-Gasket Joints for Ductile-Iron Pressure Pipe and Fittings

4. AWWA C110/A21.10 (2008) Ductile-Iron and Gray-Iron Fittings for Water

5. ANSI/AWWA C115/A21.15 (1999) Water Treatment – Flanged Ductile-Iron Pipe With Ductile-Iron or Gray-Iron Threaded Flanges

6. AWWA C115/A21.15 (2005) Flanged Ductile-Iron Pipe With Ductile-Iron or Gray-Iron Threaded Flanges

7. AWWA C150/A21.50 (2002; Errata 2003) Thickness Design of Ductile-Iron Pipe

8. AWWA C151-09 - Ductile-Iron Pipe, Centrifugally Cast.

9. AWWA C153 - Ductile-Iron Compact Fittings, 3-in Through 64-in for Water and Other Liquids.

10. AWWA C600 - Standard for Installation of Ductile-Iron Water Mains and Their Appurtenances.

11. AWWA C651 - Disinfection Water Mains

12. INTERNATIONAL ORGANIZATION FOR STANDARDIZATION (ISO)

13. ISO 228-1 (2000) Pipe Threads Where Pressure-Tight Joints Are Not Made on The Threads - Part 1: Dimensions, Tolerances and Designation

D. MANUFACTURERS STANDARDIZATION SOCIETY OF THE VALVE AND FITTINGS INDUSTRY (MSS)

1. MSS SP-58 (2002) Standard for Pipe Hangers and Supports - Materials, Design and Manufacture

2. MSS SP-89 (2003) Pipe Hangers and Supports - Fabrication and Installation Practices

3. MSS SP-69 (2003; R 2004) Standard for Pipe Hangers and Supports - Selection and Application

1.04 ADMINISTRATIVE REQUIREMENTS

A. Coordination, Sequencing, and Scheduling: per Division 01 General Requirements.

1.05 SUBMITTALS

A. Submit in accordance with Division 01 General Requirements.

B. Product Data

1. Manufacturer's descriptive data, technical literature, catalog cuts, and installation instructions including catalog cut sheets and dimensional data for each type of process pipe, tube, fitting, gaskets, hardware, and appurtenances.

2. Material safety data sheets in conformance with 29 CFR 1910 Section 1200(g) accompanying each chemical product delivered for use in pipe installations, including all solvents, solvent cements, glues and other materials that may contain hazardous compounds.

C. Shop Drawings

1. Layout and dimensions of equipment, major components, key alignment locations, and locations of bolt holes and indicate where access points for maintenance and operations are located on the equipment. Show critical field dimensions and actual pipe lengths, diameters, fittings, and appurtenances.

2. Show joint couplings and fittings and specifically identify styles. Show layouts and dimensions of piping and pipe supports for pipe systems.

D. Certificates

1. Certified affidavit of compliance from the pipe manufacturer stating that the pipe, fittings, gaskets, linings and exterior coatings for the Project have been manufactured and tested in accordance with AWWA and ASTM standards and requirements specified herein.

E. Design Data/Submittals

1. Provide a detailed submittal for pipe identification which shall include each pipe color and label for each of the respective fluid designations for review by the Engineer.

F. Manufacturer Instructions

1. Manufacturer's recommended shipping, unloading, storage, installation, testing, operation and maintenance procedures including a list of special tools and equipment required to maintain the units.

G. Source and Field Quality Control Submittals

H. Manufacturer Reports

I. Qualification Statements: as required by Article 1.06.Closeout and Maintenance Material Submittals: per Division 01 General Requirements.

1.06 QUALITY ASSURANCE

A. Provide in accordance with Division 01 General Requirements.

B. Unless otherwise indicated, all fittings and appurtenances shall be of the same type and grade of materials as the connecting pipe. All products provided under this section shall conform to current AWWA and ANSI specifications as appropriate to the type of pipe specified.

C. All welding shall be conducted under qualified welding procedures. All welders and operators shall be certified in accordance with the latest applicable AWS and ANSI codes for shop and project site welding of piping work. Provide written proof of certifications upon request from the Engineer.

D. All piping systems, components, and appurtenances in contact with potable water (including potable water during any stage of treatment or conditioning) shall be certified to meet the requirements of ANSI/NSF 61 for water service.

E. Certifications

1. All products in contact with potable water shall be ANSI/NSF Standard 61 certified.

1.07 DELIVERY, STORAGE, AND HANDLING

A. Provide in accordance with Division 01 General Requirements.

B. Packing, Shipping, Handling, and Unloading

1. Plastic pipe shall be packed, packaged and marked in accordance with ASTM D 3892 standards.

2. It is the responsibility of the Contractor to unload and string pipe. Pipe shall be lifted off the truck and placed on the ground with care and in accordance with manufacturer's recommendations to prevent damage to the pipe. Rolling the pipe off the truck or dropping the pipe is prohibited. The Contractor shall utilize padding on all hooks, slings, and pipe tongs used for unloading so as to prevent damage to the piping. Dropping of pipe during unloading shall not be acceptable. Care shall be taken so as not to skid piping against stationary piping during unloading or stacking.

3. Handling of chemicals for piping installation shall be in accordance with ASTM F 402 standards.

C. Acceptance at Site

1. Inspection of all piping and fittings shall be conducted by the Contractor after delivery on site. All piping shall be subject to rejection at any time on account of failure to meet that which is outlined in the Contract Documents. Pipe which has been rejected after delivery shall be specifically marked for "non-use" and shall be removed from the job site at no additional cost. The acceptance of any Manufacturer's pipe samples prior to shipment shall not be equal to the Engineer's acceptance of all piping delivered to the job site.

D. Storage and Protection

1. Pipe may be stacked, but no more than three layers high and only with proper blocking in between layers. The bottom row of the piping stack shall be elevated from the ground surface. The piping shall be supported off the ground through the use on timbers, rails, or concrete as recommended by the piping Manufacturer.

2. The interior of all piping and fittings shall be kept clean and free from dirt or other foreign material at all times. Utilize suitable caps or wrapping to prevent entry of dirt or foreign material into the piping. Exercise extra care when handling cement lined pipe. Damage to the interior lining of piping shall render it unfit for use.

3. Where possible, store pipe and tube inside and protected from weather. Where necessary to store outside, elevate above grade and enclose with durable, waterproof wrapping. Protect flanges and fittings from moisture and dirt by inside storage and enclosure, or by packaging with durable, waterproof wrapping.

E. Waste Management and Disposal

1.08 SITE CONDITIONS

A. Existing Conditions: per Division 01 General Requirements.

1.09 MAINTENANCE

A. Extra Materials: Furnish as specified below. Make interchangeable with and same material and workmanship as corresponding original parts.

1.10 WARRANTY

A. Provide in accordance with Division 01 General Requirements.

PART 2 – PRODUCTS

2.01 INTERIOR DUCTILE IRON PIPE AND FITTINGS

A. Design Criteria

1. Pipe shall be ductile iron pipe meeting ANSI/AWWA C150/A21.50 and C151/A21.51.

2. Fittings shall be ductile iron meeting ANSI/AWWA C110/A21.10 or C153/A21.53.

3. Pipe and fitting joints shall be flat-faced flanged meeting ANSI/AWWA C110/A21.10, C115/A21.15, and C153/A21.53. Flanges shall meet ANSI B16.1 Class 125 standard and be rated for 350 psi working pressure for 3-inch through 24-inch diameters (250 psi minimum for 30-inch through 48-inch diameters).

4. Flange gaskets shall be full face type styrene-butadiene rubber (SBR) elastomer per ANSI/AWWA C111/A21.11 and shall be a minimum of 1/8" thick. Gaskets shall be high performance type satisfying the special requirements of ANSI/AWWA C111/A21.11 Appendix C, Sec. C.2.

5. Hardware: Bolts shall meet ANSI B18.2.1 standard and nuts shall meet ANSI B18.2.2 standard. Nuts and bolts shall be of heavy hex design and shall be made of Type 316 stainless steel.

6. Pipe and fittings shall have a minimum thickness Class 53 per ANSI/AWWA C150/A21.50 and ANSI/AWWA C151/A21.51.

7. Interior of pipe and fittings shall be double cement lined per ANSI/AWWA C104/A21.4.

8. Exterior of pipe and fittings shall have a 3 to 5-mil thick, single-component, moisture-cured urethane shop applied primer coating in accordance with specification section 09 90 00 Paints and Coatings. A rust preventive coating shall also be shop applied to the machined face of flanges.

9. Pipe and fittings shall be permanently marked with the Manufacturer, Date of Manufacture, Size, Type, Class/Wall Thickness, and Standard Produced to (ASTM, AWWA, ANSI, etc.).

B. Manufacturers

1. U.S. Pipe & Foundry Company Inc.

2. American Cast Iron Pipe Company

3. Clow Water System Company

4. Or equal

C. Finishes

1. Finish coatings shall be in accordance with specification section 09 90 00 Paints and Coatings.

D. Source Quality Control

1. Provide in accordance with Division 01 General Requirements.

2.02 BURIED DUCTILE IRON PIPE AND FITTINGS

A. Design Criteria

1. Pipe shall be ductile iron pipe meeting ANSI/AWWA C150/A21.50 and C151/A21.51 standards.

2. Fittings shall be ductile iron meeting ANSI/AWWA C110/A21.10 or C153/A21.53 standards.

3. Pipe and fitting joints shall be mechanical joint meeting the requirements of ANSI/AWWA C111/A21.11. All mechanical joints shall be restrained by restraint devices, specified below.

4. Pipe and fittings shall have a minimum thickness Class 52 per ANSI/AWWA C150/A21.50 and ANSI/AWWA C151/A21.51.

5. Bolts shall meet ANSI B18.2.1 standard and nuts shall meet ANSI B18.2.2 standard. Nuts and bolts shall be of heavy hex design and shall be made of Type 316 stainless steel.

6. Interior of pipe and fittings shall be double cement lined per ANSI/AWWA C104/A21.4.

7. Exterior of pipe and fittings shall have an asphaltic, shop applied primer coating meeting AWWA C151, C115, C110, and C153 standards and in accordance with specification section 09 90 00 Paints and Coatings.

8. Pipe and fittings shall be permanently marked with the Manufacturer, Date of Manufacture, Size, Type, Class/Wall Thickness, and Standard Produced to (ASTM, AWWA, ANSI, etc.).

B. Manufacturers

1. U.S. Pipe & Foundry Company Inc.

2. American Cast Iron Pipe Company

3. Clow Water System Company

4. Or equal

C. Finishes

1. Finish coatings shall be in accordance with specification section 09 90 00 Paints and Coatings.

D. Source Quality Control

1. Provide in accordance with Division 01 General Requirements.

2.03 RESTRAINT DEVICES FOR DUCTILE IRON PIPE AND FITTINGS

A. Design Criteria

1. Restraint devices for mechanical joint pipe and fittings shall meet ANSI/AWWA C111/A21.11 or C153/A21.53 standards.

2. Restraint devices shall consist of multiple gripping wedges incorporated into a follower gland meeting the applicable requirements of ANSI/AWWA C110/A21.10.

3. The devices shall have a working pressure rating of 350 psi for 3-16 inch and 250 psi for 18-48 inch. Ratings are for water pressure and must include a minimum safety factor of 2 to 1 in all sizes.

4. Gland body, wedges and wedge actuating components shall be cast from grade 65-45-12 ductile iron material in accordance with ASTM A536. Ductile iron gripping wedges shall be heat treated within a range of 370 to 470 BHN.

5. An identification number consisting of year, day, plant and shift (YYDDD)(plant designation)(Shift number), shall be cast into each gland body.

B. Finishes

1. All wedge assemblies and related parts shall be processed through a phosphate wash, rinse and drying operation prior to coating application. The coating shall consist of a minimum of two coats of liquid thermoset epoxy coating with heat cure to follow each coat.

2. All casting bodies shall be surface pretreated with a phosphate wash, rinse and sealer before drying. The coating shall be electrostatically applied and heat cured. The coating shall be a polyester based powder to provide corrosion, impact and UV resistance. The coating system shall be MEGA-BOND by EBAA Iron, Inc. or approved equal.

C. Source Quality Control

1. Provide in accordance with Division 01 General Requirements and as follows.

a. Three (3) test bars shall be incrementally poured per production shift as per Underwriter's Laboratory (U.L.) specifications and ASTM A536.

b. Testing for tensile, yield and elongation shall be done in accordance with ASTM E8.

c. Chemical and nodularity tests shall be performed as recommended by the Ductile Iron Society, on a per ladle basis.

d. All physical and chemical test results shall be recorded such that they can be accessed via the identification number on the casting. These Material Traceability Records (MTR's) are to be made available, in hard copy, to the purchaser that requests such documentation and submits his gland body identification number. Production pieces that are too small to accommodate individual numbering, such as fasteners and wedges, shall be controlled in segregate inventory until such time as all quality control tests are

passed. These component parts may then be released to a general inventory for final assembly and packaging.

2.04 PVC PIPE & FITTINGS

A. Design Criteria

1. Pipe and fittings shall be flanged or socket welded Schedule 80 PVC pipe. The pipe shall conform to ASTM D 1785 standards, PS 21-70, PVC 1120. Pipe material shall be Type I, Grade I, compound cell classified 12454-B per ASTM D 1784 standards. The PVC compound shall be gray in color. The pipe marking shall indicate the pressure rating in psi for water at 73°F, per ASTM D 1785 standards, as well as the manufacturing date code. The pipe shall have a minimum hydrostatic design stress of 2,000 psi at 73 degrees F.

2. Pressure rating should be a minimum of 250 psi.

3. Schedule 80 fittings shall comply with ASTM D 2467 standards.

4. Flange dimensions shall conform to ASME B16.1, Class 125 standards unless otherwise indicated or required for connection to pumps, tanks, equipment, and appurtenances.

5. Unions shall utilize Viton O-rings or a material compatible with the process fluid.

6. Pipe, fittings, and solvent cement for use with potable water shall be certified by NSF standard No. 14 and the seal shall be included on the pipe.

7. All bolts, nuts, washers, and other fastening devices shall be designed for use in corrosive service environments. All fastening devices shall be Type 316 stainless steel and conform to ASTM F 593 and ASTM F 594 standards. All nuts and bolts shall be installed with an anti-seize compound of molybdenum disulfite base.

B. Manufacturer:

1. North American Specialty Products

2. J-M Manufacturing Company

3. Harvel Plastics Inc.

4. Or equal

2.05 PVC CEMENT

A. Design Criteria

1. All cement for socket welded connections shall be "Low VOC" emission, heavy bodied, medium setting, high strength solvent cement. When bonding sodium hypochlorite piping, sodium hydroxide piping or any other acid piping system the cement shall be specially formulated for the chemical application. The PVC cement shall conform to ASTM F 402, ASTM D 2564 and ASTM F 493 standards.

2.06 PIPE IDENTIFICATION

A. Identify piping according to the fluid carried, with assistance by the Engineer, as needed.

B. Piping Color

1. Provide color selections from the manufacturer's full range of standard colors.

2. Band all new pipes, and pipes with insulation, using the same color system. Color coding shall follow MassDEP Guidelines for Public Water Systems Chapter 6: Chemical Application and section 2.14: Piping Color Code of the "Ten State Standards – Recommended Standards for Water Works (2012 Edition)". For process fluids not listed in the referenced standards, a unique color scheme and labeling should be used as approved by the Engineer. In situations where two colors do not have sufficient contrast to easily differentiate between them, a six-inch band of contrasting color should be on one of the pipes at approximately 30 inch intervals as approved by the Engineer. Banding shall be at 30 inch intervals of continuous straight pipe, or at changes in direction of the pipe.

C. Pipe Labels

1. Pipes shall be labeled on two sides with pipe markers and direction of flow labels at 30 inch intervals of continuous pipe according to the Ten State Standards. A flow direction arrow shall follow the label legend and be of the same color. The labels shall meet or exceed ASME A13.1 standards. The legend letters shall be CAPITALIZED and be black or white, depending on the background color. The labels shall be KWIK KOIL labels, with snap-around style for pipes under 6" outer diameter (O.D.) and spring fastened for pipes 6" O.D. and larger, or approved equal. The labels shall be suitable for a pipe temperature range of - 40 degrees F to 175 degrees F.

2. The labels shall meet or exceed ASME A13.1 and ANSI standards.

3. Pipes shall be labeled to match labeling of existing piping.

4. Pipe labels shall be installed on the exterior of all piping insulation/jacket.

5. Where pipe passes through a wall, use pipe markers and directional arrows on each side of the wall.

6. Use a pipe marker and directional arrow at each rise, "T" joint, and change in flow direction.

7. When using directional arrows, point arrowhead away from pipe markers and in direction of flow. If flow can be in both directions, use a double headed directional arrow.

8. The piping labels shall spell out the entire fluid designation, not the abbreviation. Confirm the naming convention with the Engineer prior to ordering the labels.

9. All pipe labels of the same type, style, and duty shall be supplied by a single Manufacturer. All Manufacturers' named or otherwise shall comply with the Contract Documents. All pipe labels shall be a product of the following Manufacturer:

   a. Marking Services Inc.

   b. Brimar Industries Inc.

   c. Engineer Approved Equal

PART 3 – EXECUTION

3.01 EXAMINATION

A. Verification of Conditions

3.02 PREPARATION

A. Protection

B. Surface Preparation

C. Demolition/Removal

1. Existing pipe and fittings and associated materials shall be removed and disposed of as indicated on Drawings.

3.03 GENERAL INSTALLATION

A. Install each run of piping with minimum joints and couplings, but with adequate and accessible unions for disassembly and maintenance/replacement of valves and

equipment. Reduce sizes (where indicated on the Drawings) by use of reducing fittings. Align piping accurately at connections, within 1/16 inch misalignment tolerances.

B. Locate piping runs, except as otherwise indicated, vertically and horizontally (pitched to drain) and avoid diagonal runs wherever possible. Orient horizontal runs parallel with walls and column lines. Locate runs as shown or, if not otherwise indicated, run piping in the shortest route which does not obstruct usable space or block access for servicing the building and its equipment. Hold piping close to walls, overhead construction, columns and other structural and permanent-enclosure elements of buildings.

3.04 INTERIOR DUCTILE IRON PIPE INSTALLATION

A. The Contractor shall install ductile iron piping and fittings true to alignment. Provide rigid pipe supports and anchorage. The support spacing shall be in strict accordance with the recommendations of the piping Manufacturer.

B. The installation and piping support system shall not allow deflection of piping greater than 50% of the maximum deflection as recommended by the piping Manufacturer. Each section of piping and fittings shall be cleaned free of dirt, debris and other foreign material prior to installation. All cleaning shall be in accordance with the recommendations of the piping Manufacturer.

C. All ductile iron piping and fittings shall be installed in accordance with requirements of AWWA C600 standards. Provide all fittings for field routing of piping in addition to those shown on the Drawings to provide for a complete and operational piping system. Provide additional flanges as directed by the Engineer where piping interferes with existing facilities.

D. Pipe Cutting

1. Pipe cutting shall be as approved by the Engineer. Any damage to the interior pipe linings shall be repaired to the satisfaction of the Engineer before installation. If approved by the Engineer, cutting shall be conducted using a saw with blades specifically designed for cutting iron pipe. All cuts shall be at right angles to the axis of the piping. The cuts shall leave smooth edges. Damages to interior pipe linings caused by cutting of pipe shall be repaired to the satisfaction of the Engineer and Owner.

2. The Contractor shall seal the ends of all cut pipe in accordance with the recommendations of the pipe Manufacturer.

3. Field cutting and threading of ductile iron pipe shall not be acceptable under any circumstances, all pipe shall be pre-cut and threaded for flanges at the factory of origin

E. Joints & Connections

1. Connect piping to equipment in accordance with the instructions of the equipment Manufacturer. When Manufacturer's indicate that equipment shall not support dead loads from piping, the Contractor shall submit, in writing, that the piping installation does not transfer loading from the piping to the equipment, and that all the Manufacturer's requirements have been met. Install piping so as not to impart any strain or loading on the connected equipment

2. All bolts for flanged joints shall be tightened evenly. All bolts shall conform to the size of the flange and well as all ANSI standards. Flanged joints shall be made using gaskets, bolts, and bolt studs with a nut on each end. The Contractor shall utilize studs with nuts where the flange is tapped.

3. The Contractor shall provide tapped pipe connections as shown on the Drawings and as directed by the Engineer. All piping shall be drilled and tapped perpendicular to the longitudinal access of the pipe. All taps shall be designed to seal water tight. The pipe taps shall be of sufficient strength so as to prevent blowouts in pressurized applications. Follow the Manufacturer's instructions when tapping into fittings. All pipe taps shall be in accordance with ANSI A21.51 standards.

3.05 BURIED DUCTILE IRON PIPE INSTALLATION

A. Install ductile iron piping and fittings true to alignment. All pipe shall be thoroughly cleaned prior to laying and shall be kept clean throughout the duration of the Work. Piping shall conform to the lines and grades indicated in the Contract Documents. All ductile iron piping and fittings shall be installed in accordance with the requirements of AWWA C600, unless otherwise specified or indicated on the Drawings.

B. A firm, even bearing shall be constructed by digging bell holes at each joint and by tamping screened gravel at the sides of the pipe up to mid-diameter. Provide fill at least one (1) foot over the top of the pipe in accordance with the details shown on the Drawings. Blocking shall not be permitted. Any and all defective pipe shall be removed even after it has been laid. The pipe shall be replaced with a sound, non-defective pipe in a satisfactory manner by the Contractor at no additional cost to the Owner or Engineer.

C. All pipe shall be sound and clean prior to laying. When laying is not in progress, including lunch breaks, the open ends of piping shall be closed by watertight plugs or other Engineer approved means. Proper alignment shall be preserved in laying. Deflection of joints shall not exceed that recommended by the pipe Manufacturer. All fittings shall be provided, for crossing utilities which may be encountered upon opening the trench. Solid sleeve couplings shall only be utilized where indicated on the Drawings or with written approval of the Engineer.

D. Pipe Laying: Buried ductile iron pipe shall be installed in accordance with the trench detail as shown on the Contract Drawings.

1. New pipe shall be installed with a minimum of 5 feet of cover, measured from pipe crown to finished grade, unless otherwise shown on the Drawings or approved, in writing, by the Owner.

2. Where new pipe is to connect to existing pipe with less than 5 feet of cover exist, off-sets or joint deflection, in accordance with the allowances specified below, shall be used to transition from existing pipe elevation to new pipe elevation.

3. All pipe installed within 3 feet of a culvert or with less than 5 feet of cover (where approved) shall be insulated with a minimum 2-inch, 40 pound density Styrofoam material. The insulation shall extend the width of the trench, a minimum of 4 feet, above the pipe envelope and on the vertical sides of the trench bottom from the bottom to above the pipe envelope. No pipe shall be installed with less than 5 feet of cover without prior written approval of the Owner.

E. Pipe Cutting: When cutting of pipe is required, the cutting shall be done by a machine, leaving a smooth cut at right angles with the axis of the pipe. Cut ends of pipe shall be joined with a bell and shall be beveled to conform to the manufactured spigot end. Cement lining shall be undamaged. Field cut ends shall be sealed with an Engineer Approved epoxy, in accordance with the pipe Manufacturer's instructions. Cutting of restrained joint pipe shall not be acceptable unless approved in writing by the Engineer. If approved, cutting shall be at specific locations and the Contractor shall provide all restrainer glands or field adaptable restrained joints.

F. Joints and Connections:

1. The gasket, bell, and spigot shall be lubricated with gasket lubricating compound compatible with potable water. The new pipe shall be shoved firmly into place until properly seated and held securely until the joint has been completed. All pipes shall be pushed home by a method that protects the driving end of the pipe. Also, a minimum of two copper or bronze wedges shall be driven between each cast iron and/or ductile joint.

2. Push On Joints Assembly: All push on joints shall be installed in accordance with the recommendations of the pipe Manufacturer as well as all AWWA C600 standards. All pipe shall be laid with bell ends facing ahead. A rubber gasket shall be inserted in the groove end of the pipe, and the joint surfaces shall be cleaned and lubricated. The plain end of the pipe shall be aligned and inserted in the bell end of the pipe to which it is to be joined and pushed home with a jack or other means. After joining the pipe,

a metal feeler shall be used to make certain that the rubber gasket is correctly located.

3. Mechanical Joint Assembly: Mechanical joints shall be assembled in accordance with Appendix A of AWWA C111/A21.11 and the pipe Manufacturer's instructions. Thoroughly clean and lubricate the joint surfaces and rubber gaskets with soapy water before assembly. Bolts shall be tightened to the specified torques. Under no conditions shall extension wrenches or pipe over handle of ordinary ratchet wrenches be used to secure greater leverage. Bolts in mechanical or restrained joints shall be tightened evenly and alternately. Torque mechanical joint bolts with a torque wrench to the range specified in AWWA C-600. Mechanical joint bolts shall be re-torqued to the range specified in AWWA C-600 after waiting a period of two hours. If effective sealing of the joint is not attained at the maximum torque specified, the joint shall be disassembled and thoroughly cleaned, then reassembled. Bolts shall not be overstressed to tighten a leaking joint.

4. Restrained joints shall be provided for water mains where any bends, tees, plugs, wyes, or valves are installed. The length of joint restraint shall be in accordance with AWWA Ductile Iron Pipe and Fittings Manual of Practice M41.

G. In areas where the Contractor's trenching operation exceeds the typical section, the Contractor may be required to use a higher strength class pipe in lieu of the designated class at no additional cost to the Owner.

H. Pipe Cutting:

1. Where required, sections of pipe may be cut to provide shorter sections of pipe necessary for the construction. The cutting of the pipe shall be done in accordance with the pipe manufacturer's recommendations and subject to the approval of the Owner.

2. In general, the pipe material shall be cut by using a saw or milling process, approved by the pipe manufacturer. The pipe shall be cut, not broken. The cut end of the pipe shall be square to the axis of the pipe and any rough edges ground smooth.Special Techniques

I. Assembling Mechanical Joints: Surfaces against which the gasket will come in contact shall be thoroughly brushed with a wire brush prior to assembly of the joint. The gasket shall be cleaned. The gasket, bell, and spigot shall be lubricated by using gasket-lubricating compound compatible with potable water. The spigot shall be inserted into the bell until it is correctly seated. The gasket shall then be seated evenly in the bell at all points, centering the spigot, and the gland shall be pressed firmly against the gasket. After all bolts have been inserted and the nuts have been made up finger-tight, diametrically opposite nuts shall be progressively

and uniformly tightened all around the joint to the proper tension by means of a torque wrench. Mechanical joints shall be assembled with mechanical joint retainer glands where appropriate.

3.06 PVC PIPE INSTALLATION

A. When cutting of piping is required, all burrs, chips, filings, and other associated defects shall be removed from both the pipe inside diameter and outside diameter before joining. Cutting of piping shall be with a hand saw or pipe cutter with blades. The use of pipe cutters with rollers shall not be acceptable. All cut pipe ends shall be beveled approximately 1/16 inch back from the edge of the pipe at an angle of 10 to 15 degrees.

B. Solvent Welding

1. All joints for plastic pipe shall be solvent welded except where flanged joints are required. All pipe and fittings to be socket welded shall be clean of all loose dirt and moisture from the inside and outside diameter of the pipe end and the inside diameter of the fitting. The Contractor shall not socket weld wet piping surfaces.

2. The solvent cement shall be a grade specifically recommended by the piping Manufacturer for the size and schedule of the pipe as well as the process fluid carried. Solvent cements for acidic chemicals shall be in accordance with that previously specified. Prior to solvent welding, all fittings and couplings shall be exposed to the installation atmosphere for at least one (1) hour to the same temperature conditions as the pipe in order to assure proper thermal balance between the piping and associated fitting.

3. A minimum of two (2) coats of solvent shall be applied when recommended by the pipe, fitting, or solvent cement Manufacturer. All piping system joints four (4) inches and larger shall use a primer and finished solvent cement coating prior to assembly. The Contractor shall apply the solvent cement to the socket while keeping both the surface and applicator wet and in motion for approximately 5 to 15 seconds. The Contractor shall take care so as not to add excess solvent cement. Joints shall not be cramped.

4. The atmospheric and weather conditions affect the solvent welding procedure. In cold weather sufficient time shall be allowed for proper penetration of the solvent cement. Joining of PVC pipe and fittings shall not be conducted in atmospheric conditions below 40 degrees F, above 90 degrees F, or when exposed to direct sunlight. The Contractor shall allow for a minimum of 48 hours of drying time before moving the socket welded joint or subjecting any internal or external pressure/force.

5. When solvent welding piping to valves or other appurtenances the Contractor shall take specific care so as not to allow solvent cement to

enter the valve. Solvent cement shall not be allowed to run free from joints. All valves shall be solvent welded in strict accordance with the recommendations of the valve Manufacturer.

6. All solvent welded joints shall remain undisturbed for a minimum of 48 hours so as to allow for the development of complete strength.

C. Interface with Other Work

D. Sequences

E. System Integration

F. Tolerances

3.07 FIELD QUALITY CONTROL

A. Provide in accordance with Division 01 General Requirements.

B. Site/Field Tests and Inspections

C. Manufacturer Field Services

3.08 STARTUP & COMMISSIONING

A. Provide in accordance with Division 01 General Requirements and as follows;

B. Disinfection

1. General: Flush and disinfect piping in accordance with the latest revision of AWWA C-653 and C-651. Prevent contaminated or highly chlorinated water from entering new or previously disinfected mains.

2. Flushing and draining: Flush using water from existing main. Drain at hydrant first and then building. Provide the following minimum flow in gallons per minute: 4 inch diameter - 100 GPM; 6 inch diameter - 220 GPM; 8 inch diameter - 390 GPM; 12 inch diameter - 880 GPM.

3. Sampling: Provide sampling taps in accordance with the latest revision of AWWA C-651. Take one sample at each location as described in Section 5 of AWWA C-651. No hose of fire hydrant shall be used in the collection of samples.

4. Equipment: Provide water pumps with adequate metering devices. Provide chlorine injection pumps or chlorinators, which allow accurate measurement of chlorine being introduced to water service.

5. Personnel: Submit names of personnel or firm to perform disinfection Work.

6. Neutralization: The Contractor shall be Responsible for neutralizing the chlorine residual of the disposed water. Neutralization chemical tablets and dosages listed in Appendix C of AWWA C651 (latest revision) are recommended.

7. Once piping has been accepted and put in service, remove sample taps provided to sample in accordance with AWWA C-651 to the corporation stop.

C. Testing of Process Piping (see below for Ductile Iron Piping)

1. Perform hydrostatic testing of completed lines. Apply 1.5 times the working pressure for 20 minutes, 2-psi gage drop or less is acceptable.

2. Perform operational testing of valves by opening and closing under water pressure to insure proper operation.

D. Testing of Ductile Iron Piping

1. Perform pressure and leakage tests under Owner supervision, in accordance with the latest revision of AWWA C-600 and the requirements set forth below.

2. Duration of hydrostatic testing shall be a minimum of two (2) hours. The test pressure shall be 1.5 times the working pressure at the lowest point, and in no case less than 150 psi.

3. The allowable leakage for ductile iron pipe shall be determined by the formula:

$$L = \frac{SD\,P^{1/2}}{133{,}200}$$

Where L is the allowable leakage in gallons per hour, S is the length of pipe in feet, D is the nominal diameter in inches, and P is the average test pressure in psi.

For convenience, the following table may be used to estimate allowable leakage for ductile iron water main installations:

CIPRA RECOMMENDED ALLOWABLE LEAKAGE PER 1000-FT. OF PIPELINE*
(GALLONS PER HOUR)

Avg. Test Pressure PSI	NOMINAL PIPE DIAMETER - INCHES 4	6	8	10	12	16
450	0.64	0.95	1.27	1.59	1.91	2.55
400	0.60	0.90	1.20	1.50	1.80	2.40
350	0.56	0.84	1.12	1.40	1.69	2.25
300	0.52	0.78	1.04	1.30	1.56	2.08

Avg. Test Pressure PSI	NOMINAL PIPE DIAMETER - INCHES 4	6	8	10	12	16
275	0.50	0.75	1.00	1.24	1.49	1.99
250	0.47	0.71	0.95	1.19	1.42	1.90
225	0.45	0.68	0.90	1.13	1.35	1.80
200	0.43	0.64	0.85	1.06	1.28	1.70
175	0.40	0.59	0.80	0.99	1.19	1.59
150	0.37	0.55	0.74	0.92	1.10	1.47
125	0.34	0.50	0.67	0.84	1.01	1.34
100	0.30	0.45	0.60	0.75	0.90	1.20

For mechanical or push-on joint pipe with 18-ft. nominal lengths. To obtain the recommended allowable leakage for pipe with 20-ft. nominal lengths, multiply the leakage calculated from the above table by 0.9

If the pipeline under test contains sections of various diameters, the allowable leakage will be the sum of the computed leakage for each size.

3.09 CLOSEOUT ACTIVITIES

A. Provide in accordance with Division 01 General Requirements.

END OF SECTION

This page intentionally left blank.

SECTION 40 05 14

PROCESS PIPE COUPLINGS AND CONNECTORS

PART 1 – GENERAL

1.01 SUMMARY

A. Section Includes

1. Provide all process pipe couplings and connectors in accordance with this Section and applicable reference standards listed in Article 1.03.

B. Related Requirements

1. 40 05 13 Process Pipe & Fittings
2. 40 05 15 Process Pipe Supports
3. 40 05 17 Process Pipe Sleeves & Seals
4. 40 05 23 Process Valves & Strainers

1.02 PRICE AND PAYMENT PROCEDURES

A. Measurement and payment requirements: per Division 01 General Requirements.

1.03 REFERENCES

A. Reference Standards

B. AMERICAN WATER WORKS ASSOCIATION (AWWA)

1. AWWA C110/A21.10 (2008) Ductile-Iron and Gray-Iron Fittings for Water
2. AWWA C111/A21.11 (2000) Rubber-Gasket Joints for Ductile-Iron Pressure Pipe and Fittings
3. AWWA C153/A21.53 (2006) Ductile-Iron Compact Fittings for Water Service
4. AWWA C207 (2007) Standard for Steel Pipe Flanges for Waterworks Service-Sizes 100 mm through 3600 mm 4 in. through 144 in.
5. AWWA C600 (2005) Installation of Ductile-Iron Water Mains and Their Appurtenances

6. AWWA C606 (2006) Grooved and Shouldered Joints

7. AWWA M11 (2004) Manual: Steel Pipe: A Guide for Design and Installation

C. ASTM INTERNATIONAL (ASTM)

1. ASTM A 108 (2007) Standard Specification for Steel Bar, Carbon and Alloy, Cold-Finished

2. ASTM A 126 (2004) Standard Specification for Gray Iron Castings for Valves, Flanges, and Pipe Fittings

3. ASTM A 183 (2003) Standard Specification for Carbon Steel Track Bolts and Nuts

4. ASTM A 197/A 197M (2000; R 2006) Standard Specification for Cupola Malleable Iron

5. ASTM A 307 (2007b) Standard Specification for Carbon Steel Bolts and Studs, 60 000 PSI Tensile Strength

6. ASTM A 325M (2009) Standard Specification for Structural Bolts, Steel, Heat Treated, 830 Mpa Minimum Tensile Strength (Metric)

7. ASTM A 36/A 36M (2008) Standard Specification for Carbon Structural Steel

8. ASTM A 48/A 48M (2003; R 2008) Standard Specification for Gray Iron Castings

9. ASTM A 512 (2006) Standard Specification for Cold-Drawn Buttweld Carbon Steel Mechanical Tubing

10. ASTM A 513 (2008a) Standard Specification for Electric-Resistance-Welded Carbon and Alloy Steel Mechanical Tubing

11. ASTM A 536 (1984; R 2009) Standard Specification for Ductile Iron Castings

12. ASTM A 564/A 564M (2004; R 2009) Standard Specification for Hot-Rolled and Cold-Finished Age-Hardening Stainless Steel Bars and Shapes

13. ASTM A 575 (1996; R 2007) Standard Specification for Steel Bars, Carbon, Merchant Quality, M-Grades

14. ASTM A 632 (2004) Standard Specification for Seamless and Welded Austenitic Stainless Steel Tubing (Small-Diameter) for General Service

15. ASTM B 584 (2008a) Standard Specification for Copper Alloy Sand Castings for General Applications

16. ASTM B 62 (2002) Standard Specification for Composition Bronze or Ounce Metal Castings

17. ASTM B 633 (2007) Standard Specification for Electrodeposited Coatings of Zinc on Iron and Steel

18. ASTM B 88 (2003) Standard Specification for Seamless Copper Water Tube

19. ASTM D 2774 (2008) Underground Installation of Thermoplastic Pressure Piping

1.04 ADMINISTRATIVE REQUIREMENTS

A. Coordination, Sequencing, and Scheduling: per Division 01 General Requirements.

1.05 SUBMITTALS

A. Submit in accordance with Division 01 General Requirements.

B. Product Data

1. All "bellows type" expansion joint Manufacturers shall provide materials of construction, including gauge of corrugated element, maximum test pressure force to compress joint, bellows spring rate, shear force and end moment due to calculated traverse only. The Manufacturer shall also furnish evidence of completing cycle life testing for the maximum diameter coupling to be installed. The Manufacturer shall indicate such assured cycle life test results on the materials and information submitted for approval.

2. Provide catalog cut sheets of joints, couplings, harnesses, expansion joints, gaskets, fasteners and all other process pipe couplings and connectors specified in this section.

3. Provide sufficient product data to verify compliance with the specifications and to illustrate the construction and assembly of the products. Include compliance of materials and components with applicable CEAM, ASTM, AGMA, and other standards. List the manufacture, model and weights of major components. Include catalog cuts, illustrations, schedules, diagrams, performance charts, instructions and brochures illustrating size, physical appearance and other characteristics of materials, systems or equipment.

C. Shop Drawings

1. Provide drawings of all couplings, connectors, and fittings in the product submittals. The submittal drawings shall show layouts and dimensions of the couplings and connectors. Drawings shall also show layout and dimensions of all couplings and connectors, major components, key alignment locations and locations of bolt holes.

D. Samples and Mockups

E. Certificates

F. Design Data/Submittals

G. Sample Test Reports and Evaluations

H. Manufacturer Instructions

I. Source and Field Quality Control Submittals

J. Manufacturer Reports

K. Qualification Statements

L. Closeout and Maintenance Material Submittals: per Division 01 General Requirements.

1.06 QUALITY ASSURANCE

A. Provide in accordance with Division 01 General Requirements.

B. Qualifications: per Division 01 General Requirements.

C. Regulatory Approvals

D. Pre-Construction Testing

E. Independent Testing

F. Certifications

1. All piping systems, components, and appurtenances in contact with potable water (including potable water during any stage of treatment or conditioning) shall be certified to meet the requirements of ANSI/NSF 61 for water service.

G. Samples

H. Mockups

1.07 DELIVERY, STORAGE, AND HANDLING

A. Provide in accordance with Division 01 General Requirements.

B. Packing, Shipping, Handling, and Unloading

1. Surfaces such as female threads, internal mechanical joint ends or flange faces shall be protected from damage during shipment.

C. Acceptance at Site

1. Inspect the materials delivered to the site for damage.

D. Storage and Protection

1. Store rubber products under cover out of direct sunlight. Do not store materials directly on the ground. Keep the inside of couplings, connectors, and fittings free of dirt and debris.

2. Materials delivered and placed in storage shall be stored with protection from the weather, excessive humidity variation, excessive temperature variation, dirt, dust and/or other contaminants. Proper protection and care of materials before, during and after installation shall be the Contractor's responsibility. Any materials found to be damaged shall be replaced at the Contractor's expense. Materials shall be stored with protection from puncture, dirt, grease, moisture, mechanical abrasions, excessive heat, ultraviolet (UV) radiation, or other damage.

E. Waste Management and Disposal

1.08 SITE CONDITIONS

A. Existing Conditions: per Division 01 General Requirements.

1.09 MAINTENANCE

A. Extra Materials: Furnish as specified below. Make interchangeable with and same material and workmanship as corresponding original parts.

1.10 WARRANTY

A. Provide in accordance with Division 01 General Requirements.

PART 2 – PRODUCTS

2.01 SOLID SLEEVE TYPE COUPLINGS

A. Design Criteria

1. Provide solid sleeve type couplings to join all plain end pipes and/or exterior below grade transitions in piping materials as shown on the Drawings, as specified and as outlined in AWWA C 201 standards. In cases where the outside diameters of the piping segments to be connected differ, provide "reduction/expansion" sleeve type couplings.

2. Sleeve type couplings shall also be provided for all exterior below grade piping runs prior to entering and exiting buildings or structures. The couplings shall be installed prior to the building or structure wall penetration to allow for differential settlement of the piping and structure.

3. All sleeve type couplings shall conform to the provisions of AWWA C 219 standards. All sleeve type couplings shall be rated for use with the same operational pressure as the connecting pipes.

4. All sleeve type couplings for low pressure air service shall be 304L stainless steel with 316L stainless steel followers.

5. All coupling lugs shall be in accordance with ASTM A 36/A 36M standards. All washers shall be in accordance with ASTM A 325M standards. All couplings shall be fitted with plastic plugs to protect the bolt holes.

6. Provide sleeve couplings on all piping buried directly under a structure at the structure's expansion joints. In applications where the piping is encased in concrete, provide a minimum of 3-inch-thick Styrofoam placed perpendicular to the horizontal centerline of the coupling.

7. Fasteners: All bolts shall be installed such that a minimum of 1/4 inch of the bolt projects beyond the surface of the nut. All hexagonal nuts shall be in accordance with ANSI B18.2 standards. Hexagonal nuts shall have threads in accordance with ANSI B1.1 standards. All bolts shall be in accordance with ASTM A 307 and ANSI B1.1 standards. All bolts shall be square or hexagonal head type. Bolts shall be threaded over the full length. All bolt ends shall be rounded or chamfered. Bolts shall be coarse thread fit type. Provide 316 stainless steel hardware for all sleeve type couplings.

8. Gaskets: Provide gaskets to match the particular service application. Unless otherwise specified or recommended by the coupling Manufacturer, all gaskets for low pressure air service shall be EPDM and

all gaskets for wastewater service shall be Nitrile (Buna-N/NBR). The coupling gasket shall match the gasket material used for the piping system.

9. Middle Ring: The pipe stop within the inner surface of the middle ring of couplings shall be omitted as required to permit removal of valves, flow meters, equipment, and appurtenances. All other couplings shall be provided with pipe stops. The middle ring of each sleeve type coupling shall have a thickness at least equal to that of the connecting piping on which the coupling is to be used. All sleeve type couplings shall be a minimum of 10 inches long for pipe 30 inches and larger. All sleeve type couplings shall be a minimum of 7 inches long for pipe under 30 inches in diameter. Couplings which are designed to be self-restrained shall not be required to meet the minimum middle ring length requirements specified.

B. Acceptable Vendors:

1. Dresser Piping Specialties

2. Smith-Blair Inc.

3. Engineer Approved Equal

2.02 FLEXIBLE SLEEVE TYPE COUPLINGS

A. Provide flexible sleeve type couplings to join all plain end pipes and/or transitions in piping materials as shown on the Drawings and as specified herein. In cases where the outside diameters of the piping segments to be connected differ, provide concentric or eccentric "reduction/expansion" flexible sleeve type couplings.

B. Flexible sleeve type couplings shall also be provided for all exterior below grade piping runs prior to entering and exiting buildings or structures. The couplings shall be installed prior to the building or structure wall penetration to allow for differential settlement of the piping and structure. All sleeve type couplings shall be rated for use with the same operational pressure as the connecting pipes. The couplings shall also conform to applicable portions of ASTM A 564/A 564M, ASTM C 443, ASTM C 425 and ASTM D 1869 standards. Provide couplings with a 300 series stainless steel shear ring for all below grade installation applications.

C. The couplings shall be designed for a maximum operating temperature of 140 degrees F (non-consistent) and a minimum operating temperature: –30 degrees F. Each coupling shall include two (2) 316 stainless steel band clamps. Each clamp shall be an interlocked housing and band design which strengthens under tension to ensure a positive seal. The bands shall include additional slots to accommodate a greater dimensional range.

D. All flexible sleeve type couplings of the same type, style, and duty shall be supplied by a single Manufacturer. All Manufacturers named or otherwise shall comply completely with the Contract Documents. All flexible sleeve type couplings shall be a product of the following Manufacturer:

1. Fernco, Inc.

2. Mission Rubber Company, LLC

3. Engineer Approved Equal

E. Coupling Sleeve (Gasket)

1. The coupling sleeve shall be constructed of PVC to allow for flexibility and chemical resistance. The PVC sleeve shall also be resistant to ultraviolet rays, fungus growth and sewer gases. All flexible sleeve type couplings shall also be designed in accordance with ASTM D 5926, ASTM C 1173 and CSA B602 standards. All coupling sleeves shall be designed and constructed in accordance with the following criteria:

a. Hardness (Shore A): 65 (+/-) 5

b. Tensile Strength: 1,000 psi (minimum)

c. Elongation at Rupture: 250% (minimum)

d. Tear Strength: 150 lb/in (minimum)

e. Brittleness Temperature: -40°F

F. Coupling Shear Rings: For "buried" applications provide couplings with shear rings which are designed for resistance to heavy earth loads and shear forces to provide improved pipe alignment. The shear ring shall be a minimum of 0.12 inches thick 300 series stainless steel. The width of the shear ring shall be manufactured according to coupling width and the length shall be manufactured according to coupling diameter. Each shear ring shall have clamps spot welded in place at the factory.

2.03 EXPOSED SLEEVE TYPE FLANGED ADAPTORS

A. Provide exposed sleeve type flanged adaptors for joining "Plain end cast iron, ductile iron, and steel piping at fittings, valves, equipment, flow meters, and other appurtenances as required, specified, as shown on the Drawings or as directed by the Engineer. All flanged adapters shall conform in size and bolt hole placement to ANSI standards for steel and/or cast iron flanges 125/150 pound standard unless otherwise required for connections. Flanged adaptors shall be rated for a minimum pressure of 150 psi.

B. The follower shall be in accordance with AISI C1012 or ASME SA36 standards. The body and flange shall be of the same material as the connecting piping and designed in accordance with ASTM A 513, ASTM A 635, or ASME SA675

GR60 standards. All ductile iron bodies shall be in accordance with ASTM A 536 standards. All bolts, nuts and washers shall be 316 stainless steel in accordance with AWWA C111/A21.11 standards. Gaskets for wastewater service shall be Nitrile (Buna-N/NBR). All flanged adaptors for use in potable water service shall be ANSI/NSF 61 listed. The gasket shall have a nominal temperature range of -20 degrees F to 180 degrees F. All ferrous metal surfaces of flanged adaptors shall be provided with a corrosion resistant epoxy finish. Stainless steel components shall not be painted.

C. Unless otherwise specified or shown on the Drawings, all exposed sleeve type flanged adaptors, of the same type, style, and duty shall be supplied by a single Manufacturer. All Manufacturers named or otherwise shall comply with the Contract Documents. All exposed sleeve type flanged adaptors shall be a product of the following Manufacturer:

1. Dresser Inc. - Style 128

2. Smith-Blair Inc. - Style 912

3. Engineer Approved Equal

2.04 SHORT BODY FLANGED ADAPTORS

A. Provide exposed "short body" flanged adaptors for joining plain end piping at fittings, valves, equipment, flow meters, and other appurtenances as required, specified, as shown on the Drawings or as directed by the Engineer. All flanged adapters shall conform in size and bolt hole placement to ANSI standards for steel and/or cast iron flanges 125/150 pound standard unless otherwise required for connections. The flanged adaptors shall be rated for a minimum pressure of 150 psi.

B. The restraints shall be manufactured of ductile iron conforming to ASTM A 536 standards. The bolt circles and bolt holes shall conform to AWWA C110/A21.10 standards. The screws shall have a Rockwell hardness of C40-45 converted from Brinnell. The flanged adaptor shall be designed with a minimum safety factor of 2.

C. Flange adaptors shall be UL listed. All flanged adaptors shall be designed for use on water or wastewater pipelines subject to hydrostatic pressure in accordance with AWWA C600 or ASTM D 2774 standards.

D. All flanged adaptor assemblies and related parts shall be processed through a phosphate wash, rinse, and drying operation prior to coating application. The coating shall consist of a minimum of two coats of liquid thermoset epoxy coating with heat cure to follow each coat. All casting bodies shall be surface pretreated with a phosphate wash, rinse, and sealer before drying. The coating shall be electrostatically applied and heat cured. The coating shall be a polyester based powder to provide corrosion, impact, and UV resistance.

E. All short body flanged adaptors of the same type, style, and duty shall be supplied by a single Manufacturer. All Manufacturers named or otherwise shall comply completely with the Contract Documents. All short body flanged adaptors shall be a product of the following Manufacturer:

1. EBAA Iron, Inc. - Series 1000

2. Engineer Approved Equal

2.05 EXPANSION JOINTS (LIQUID SERVICE)

A. Provide single arch flexible connectors of the expansion/vibration type for connection to pumps and equipment as specified and as shown on the Drawings. Expansion joints for liquid waste water service shall be "filled arch" type to prevent sediment build up. Utilize filled arch expansion joints for all sludge, septage, raw waste water, chemicals and other piping of similar fluid service. Guides shall be provided for each expansion joint.

B. All expansion joints shall be designed for the axial movements required for the specified application along with the maximum axial force required to compress the joint. The joints shall prevent axial, lateral and rotational movement and vibration from being transmitted to the piping and equipment. All expansion joints shall be designed for the test pressure of the connecting piping where installed as outlined in section 40 05 13 "PROCESS PIPE AND FITTINGS" or as directed by the Engineer.

C. Unless otherwise specified or shown on the Drawings, all expansion joints for liquid service, of the same type, style, and duty shall be supplied by a single Manufacturer. All Manufacturers named or otherwise shall comply with the Contract Documents. The manufacturer of the expansion joints shall be a member of the Rubber Expansion Joint Division of the Fluid Sealing Association. All liquid service expansion joints shall be a product of the following Manufacturer:

1. General Rubber Corporation - Style 1025

2. Mercer Rubber Company - Series 450

3. Red Valve Company Inc. - Type J-1

4. Engineer Approved Equal

D. MATERIALS OF CONSTRUCTION

1. Expansion joints shall be manufactured of butyl rubber surrounded by high grade woven cotton or suitable synthetic fiber and individual solid steel ring reinforcement. All soft rubber fillers shall be integrally cured into the arches to provide a smooth flow path to prevent settling of material, grit, sludge etc., into the arch. The rubber used shall be

specifically designed for service with wastewater and/or sludge. The expansion joints shall include a three-ply abrasion resistant liner.

2. All expansion joints for chemical service shall be constructed of Viton. Provide alternative materials of construction which are compatible with the process fluid if Viton is not compatible.

E. JOINTS

1. Unless otherwise specified or shown on the Drawings, all joints shall match the connecting piping size. The expansion joints shall be designed for the working pressure and fluid service of the connecting piping. All joints shall have full faced fabric reinforced butyl flanges integral with the flexible connector body.

F. BACK-UP RINGS

1. Provide stainless steel back-up rings for each joint. Provide Split steel or ductile iron back-up rings only where specifically indicated on the Drawings to ensure a proper joint fit. Unless otherwise specified or shown on the Drawings, all rings shall be designed for mating with ANSI Standard 125/150 pound flanges. All joints shall be provided with a two part epoxy coating finish. Stainless steel back-up rings shall not be painted.

G. CONTROL HARNESSES

1. All expansion joints used for vibration isolation/expansion service shall be provided with control harness assemblies. All control harness assemblies shall consist of a minimum of two drilled plates, stretcher bolts, and rubber washers backed by metal washers. The stretcher bolts/control rods shall prevent over-elongation of the joint. Extra nuts shall be provided on the stretcher bolts/control rods on the inside of the plate to prevent over compression. All nuts, bolts, fasteners and plates shall be 316 stainless steel.

H. SEAL WATER SYSTEMS

1. Provide flexible connectors for the seal water connection to each pump stuffing box. The flexible connectors shall be designed to isolate vibration from being transmitted from the pump(s) and the seal water piping assemblies. The flexible connectors shall be hose type constructed of Nitrile (Buna-N/NBR) with fiber type reinforcement. All hose type flexible connectors shall be rated for a pressure of 150 psi. The hose type flexible connectors shall be a minimum of 12 inches long. Provide type 304L stainless steel or bronze NPT end fittings for connection to the pump stuffing box.

2.06 EXPANSION JOINTS (AIR SERVICE)

A. Provide "bellows style" flexible connectors of the expansion/vibration type for all low pressure air service piping, equipment, and appurtenances as specified and as shown on the Drawings. The flexible connector shall be "non-filled arch" type. All expansion joints shall be designed for a maximum pressure of 20 psig at a temperature of 250 degrees F. The expansion joints shall be designed to prevent rotational movement and vibration from being transmitted to the piping, equipment, or associated appurtenances. All flexible connectors shall be constructed in accordance with the latest revision of Section C of The Standards of the Expansion Joint Manufacturers, Fifth Edition, 1980, including all current addenda.

B. Flange drilling shall match or be suitable for use with the connected equipment or companion flanges. Furnish guides with all bellows style expansion joints. "Hinged" or "Gimbal" expansion joints shall be provided at horizontal and vertical bends in strict accordance with the standards of the Expansion Joint Manufacturer's Association (EJMA). If reinforcement of the expansion joint is necessary for pressure, reinforcing rings shall be formed integrally with bolted-on control devices such as equalizing rings.

C. All bellows style expansion joints shall be hydraulically formed (with dies on the outside only). All seam welding shall be longitudinal only. All seams shall have equal strength, physical properties and thickness as the parent metal. The entire expansion joint, including but not limited to the bellow and internal sleeve shall be constructed entirely of Type 316 stainless steel (minimum). The end flanges shall be constructed of 316 stainless steel. The entire inside length of the expansion joint shall be straight.

D. The expansion joint Manufacturer shall warrant their product to be suitable for the proposed service conditions as specified and as shown on the Drawings. The Manufacturer shall provide lifting lugs at each flange for ease in handling and removal of sheet metal coverage for any expansion joint for maintenance or installation.

E. Unless otherwise specified or shown on the Drawings, all expansion joints for low pressure air service, of the same type, style, and duty shall be supplied by a single Manufacturer. All Manufacturers named or otherwise shall comply with the Contract Documents. The manufacturer of the expansion joints shall be a member of the Expansion Joint Manufacturer's Association (EJMA). All air service expansion joints shall be a product of the following Manufacturer:

1. U.S. Bellows, Inc.

2. Unaflex Inc.

3. Engineer Approved Equal

2.07 HARNESSINGAND RESTRAINTS

A. Provide all harnessing as specified, as shown on the Drawings, and as required for couplings and adaptors. Unless otherwise specified or noted, the size and material for tie rods, clamps, plates and hex nuts shall be as shown on the Drawings. When not specifically specified or shown on the Drawings all harnessing and restraints shall be sized per AWWA M11 standards.

B. All restrained joints, such as welded, or locking mechanical joints shall be of the type specified with the individual type of pipe. If not specified, restrained (locking) mechanical joint pipe shall be of the Manufacturer's standard design utilizing a locking device (ring or ears) integrally cast with the pipe. The Contractor shall be responsible for all anchorage and restraint for piping installations.

C. Unless otherwise specified or shown on the Drawings, all harnessing and restraint systems, of the same type, style, and duty shall be supplied by a single Manufacturer. All Manufacturers named or otherwise shall comply with the Contract Documents. All harnessing and restraint systems shall be a product of the following Manufacturer:

1. Dresser Inc. - Style 440

2. Engineer Approved Equal

2.08 QUICK CONNECT COUPLINGS - TYPE C13

A. Provide quick connect couplings as specified and as shown on the Drawings. Quick connect couplings shall be provided at all exterior chemical delivery stations as well as septage delivery stations.

B. Couplings shall match the connecting pipe size shown on the Drawings. The quick connect couplings shall be cam and groove type with a male/female adapter as required. All quick connect couplings shall conform to A-A-59326 and (MIL-C-27487) standards. All couplings for wastewater and septage service which are connected to metallic piping shall have a body constructed of 316 stainless steel with 316 stainless steel handles and pull rings. All seals for wastewater and/or septage service shall be EPDM for maximum UV resistance in outdoor installations. The male adapter shall connect to the pipe via a 125/150 pound flange connection.

C. All couplings connected to PVC (non-metallic piping) as well as all couplings for chemical delivery or chemical service applications shall have a body constructed of polypropylene. The polypropylene shall be acid-resistant and glass-reinforced. Handles and pull rings for polypropylene couplings shall be brass. Gaskets shall be of a material which is compatible with the process fluid to match the gasket of the piping system, or of a material as specified or as directed by the Engineer. Gaskets for chemical delivery quick connect couplings shall be Viton.

D. The quick connect coupling shall be designed to receive a female/male coupler without requiring threading, bolting, or special tools. The connection shall remain tight and leak-proof under pressures up to 100 psi. Each quick connect coupling shall be furnished with a dust cap complete with a stainless steel security chain. Provide all adaptors and appurtenances as required to provide a complete and working system.

E. Unless otherwise specified or shown on the Drawings, all quick connect couplings, of the same type, style, and duty shall be supplied by a single Manufacturer. All Manufacturers named or otherwise shall comply with the Contract Documents. All quick connect coupling systems shall be a product of the following Manufacturer:

1. OPW Engineered Systems - Kamlock Series

2. Flow Lock Inc. - Snaplock Series

3. Banjo Corporation

4. Engineer Approved Equal

2.09 UNIONS

A. Provide unions as specified and as shown on the Drawings. In addition to that shown on the drawings, provide unions at all locations including but not limited to the following: equipment, pumps, tanks, valves, long piping runs, piping bypasses around equipment, or any other location as directed by the Engineer or Owner. Unions shall be located to allow for ease of piping disassembly, alterations, or repairs.

B. All unions shall be brass or bronze for joining nonferrous metallic pipe. Provide malleable brass, bronze-seated iron, or steel unions for joining ferrous metallic pipe. Provide PVC unions for joining plastic and non-metallic pipe.

2.10 DIELECTRIC CONNECTORS

A. Provide dielectric piping connectors, fittings, and insulators as specified, as shown on the Drawings or as directed by the Engineer. Dielectric pipe connectors and unions shall be used to prevent galvanic action wherever valves or piping of dissimilar metals connect. In addition, Provide dielectric connectors whenever copper, brass, or bronze piping is required to be connected to cast iron or steel piping.

B. Provide dielectric flange unions for all connections 2-1/2 inches and larger. All cast iron flanges shall meet ASTM A 126 standards. The copper solder end shall meet ASTM B 62 standards and the pipe thread shall meet ASME B2.1 standards. Dielectric flange unions shall be rated for at least 175 psi at 210 degrees F.

C. Dielectric unions used for piping connections two (2) inches and smaller shall be designed to accommodate the end connections of the two connecting pipe segments. Steel union nuts shall be in accordance with ASTM A 575 standards. Steel or ductile iron connection ends shall have accurately machined taper tapped pipe threads in accordance with ASME B2.1 standards. Copper connection ends shall be solder joint which meets the requirements of ASTM B 88 standards. All dielectric unions for piping connections two (2) inches and smaller shall be rated for at least 250 psi at 210 degrees F.

D. Dielectric fittings and unions shall be manufactured of one or more of the following materials. The materials shall be in accordance with the associated reference standards and criteria:

1. Gray iron - ASTM A 48/A 48M
2. Malleable iron parts - ASTM A 197/A 197M
3. Steel parts - ASTM A 108
4. Brass parts - ASTM B 16
5. Bronze parts - ASTM B 584
6. Zinc parts - ASTM B 633
7. Stainless steel - ASTM A 632

E. All gaskets for water or waste water service shall be Nitrile (Buna-N/NBR) or EPDM. Gaskets for low pressure air service or other high temperature applications shall be EPDM. The Contractor shall ensure that all gaskets are of a material which is compatible with the process fluid. The use of gasket materials shall be as approved by the Engineer and Manufacturer.

F. Unless otherwise specified or shown on the Drawings, all dielectric unions, of the same type, style, and duty shall be supplied by a single Manufacturer. All Manufacturers named or otherwise shall comply with the Contract Documents. All dielectric union systems shall be a product of the following Manufacturer:

1. Watts Inc. - Series 3000
2. Wilkins, a Zurn Company
3. G&L Fittings Inc.
4. Engineer Approved Equal

G. Provide all flange insulating kits for dielectric connections. One insulator shall be provided for each bolt of the flange connection. Insulated sleeve couplings and flange adaptors shall be similar to those units as previously specified.

H. Unless otherwise specified or shown on the Drawings, all flange insulating kits, of the same type, style, and duty shall be supplied by a single Manufacturer. All Manufacturers named or otherwise shall comply with the Contract Documents. All flange insulating systems shall be a product of the following Manufacturer:

1. Watts Inc.

2. Wilkins a Zurn Company

3. Engineer Approved Equal

2.11 RESTRAINED MECHANICAL JOINT COUPLINGS

A. Provide restrained mechanical joint couplings where indicated on the Drawings or as specified. Restrained mechanical joint couplings shall only be utilized with written permission of the Engineer when not specified or indicated on the Drawings. Restrained mechanical joint couplings shall not be considered as equivalent to concrete thrust blocks.

B. All restrained mechanical joint couplings shall be listed by Underwriters Laboratories, Inc., as meeting their standard (UL 6M46), latest revision. Restrained mechanical joint couplings shall also comply with Factory Mutual Research Corporation's approvals.

2.12 RETAINER AND FOLLOWER GLANDS

A. Mechanical joint retainer glands shall be incorporated in the design of the follower gland and shall include a restraining ring that, when actuated by a wedging action of the gland, imparts a restraining force against the pipe that increases as the pressure increases. The restraining ring shall grip the full pipe circumference.

B. Coupling devices that restrain by a method of "Point-Loading" on the pipe shall not be acceptable.

C. MATERIALS OF CONSTRUCTION

1. Glands and restraining rings shall be manufactured of Ductile Iron meeting ASTM A 536 standards, Grade 65-45-12. Restraining rings shall also be heat treated to a minimum hardness of Rockwell 40. The restrained mechanical joint couplings shall meet the latest revisions of ANSI A21.10, AWWA C111/A21.11, and AWWA C153/A21.53 standards. The restraint ring shall be actuated solely by the tee-head bolts. Provide a two part epoxy coating on all ferrous metallic surfaces of couplings.

2. The restrained mechanical joint couplings shall have a working pressure of at least 350 psi with a minimum safety factor of 2:1.

2.13 DUCTILE IRON EXPANSION JOINTS

A. Expansion joints shall be installed in the locations indicated on the drawings and shall be manufactured of ductile iron conforming to the material properties of ANSI/AWWA C153/A21.53. All expansion joints shall be capable of expanding or contracting to the amounts shown on the drawings or as indicated in the specifications. At a minimum, each expansion joint shall allow for a minimum of four (4) inches of total axial movement.

B. Separation beyond the maximum extension of the expansion joint shall be prevented without the use of external tie rods. Each expansion joint shall be pressure tested against its own restraint to a minimum of 350 psi for joint which are less than 24 inch and 250 psi for joints which are larger than 24 inches. Joint restraint shall be provided with each mechanical joint connection to the expansion joint.

C. All internal surfaces (wetted parts) shall be lined with a minimum of 15 mils of fusion bonded epoxy conforming to the applicable requirements of ANSI/AWWA C213. Exterior surfaces shall be coated with a minimum of 6 mils of fusion bonded epoxy conforming to the applicable requirements of ANSI/AWWA C116/A21.16. Sealing gaskets shall be constructed of EPDM. The coating and gaskets shall meet ANSI/NSF-61. Each ductile iron expansion joint shall be designed in accordance with the following criteria:

1. Size: 3 inch through 36 inch – Match to piping size shown on Drawings

2. Body: Ductile Iron, per ASTM A 536

3. End Connections: Flanged, Mechanical Joint or combination Flanged/Mechanical Joint as required for piping connections or as indicated on the Drawings.

4. Linear Expansion: 4 inches (Minimum)

D. All coupling seals shall conform to the applicable requirements of ANSI/AWWA C111/A21.11. Flange outlets shall conform to the dimensional requirements of ANSI/AWWA C110/A21.10 (class 150) with the addition of an O-ring gasket to ensure a watertight seal. Mechanical Joint end connections conform to the dimensional requirements of either ANSI/AWWA C111/A21.11 or ANSI/AWWA C153/A21.53 depending on size.

Source Quality Control

1. Provide in accordance with Division 01 General Requirements.

2. Tests and Inspections

3. Manufacturer Field Services

4. Coordination of Other Tests and Inspections

PART 3 – EXECUTION

3.01 INSTALLERS

A. Qualified per Division 01 General Requirements.

3.02 EXAMINATION

A. Verification of Conditions

3.03 INSTALLATION OF SLEEVE TYPE COUPLINGS

A. All sleeve type couplings shall be installed in strict accordance with the recommendations of the coupling Manufacturer. The Contractor shall thoroughly clean all pipe connecting ends prior to installation of sleeve couplings. The pipe ends shall be cleaned a minimum of 8 to 12 inches from the ends of the piping prior to installation. Provide clean soapy water for use as a gasket lubricant.

B. Install the follower ring then the gasket over each pipe end to a distance of approximately 6 inches from the end of the pipe. Place the middle ring over the center of the joint. Insert the pipe length into the middle ring the full and proper distance. The gaskets and followers shall then be pressed evenly into the middle ring flares.

C. Insert all bolts. All bolts shall be finger tightened prior to the use of tools. Progressively tighten diametrically opposite nuts uniformly around the adapter. Once the nuts can no longer be finger tightened use a torque wrench of the appropriate size and torque for the bolts. Utilize the wrench to progressively and uniformly tighten all bolts.

D. The torque applied shall be in accordance with the recommendations of the coupling Manufacturer. The correct torque as indicated by a torque wrench shall not exceed 75 foot-pounds for 5/8 inch bolts and 90 foot-pounds for 3/4 inch bolts.

E. Insert and tighten all tapered threaded lock pins. All bolts shall be finger tightened prior to use of tools. Progressively tighten diametrically opposite nuts uniformly around the adapter. Once the nuts can no longer be finger tightened use a torque wrench of the appropriate size and torque for the bolts. Utilize the wrench to progressively and uniformly tighten all bolts.

F. Provide and install harnessing or flange clamp assemblies where shown on the Drawings, as specified or as directed by the Engineer. Harnessing or flange clamp assemblies shall be provided to prevent sleeve couplings from being pulled apart

under pressure. It shall be the Contractor's responsibility for locating, providing and installing all restraints. Harnessing, flange clamp assemblies, or tie rods shall be provided on all pressurized lines.

3.04 INSTALLATION OF EXPANSION JOINTS

A. Align all piping systems prior to installation of expansion fittings. The alignment shall be provided by fitting a rigid pipe spool in place of the expansion joint. Prior to testing of the piping system, the pipe spool shall be replaced with the specified expansion or flexible fitting.

B. In addition to the locations noted on the Drawings, expansion fittings and anchors shall be located and spaced as specified by the Expansion Joint Manufacturer's Association (EJMA). The Contractor shall not install any expansion joints or flexible connectors during times of temperature extremes or in a fully compressed or fully expanded condition. Install all expansion joints in strict accordance with the Manufacturer's recommendations.

3.05 REPAIR/RESTORATION

A.

3.06 FIELD QUALITY CONTROL

A. Provide in accordance with Division 01 General Requirements.

B. Site/Field Tests and Inspections

C. Manufacturer Field Services

3.07 STARTUP & COMMISSIONING

A. Provide in accordance with Division 01 General Requirements.

B. All couplings and connectors specified in this section shall be hydrostatically pressure tested with the associated piping as specified in section 40 05 13 Process Pipe And Fittings or as directed by the Engineer

3.08 CLOSEOUT ACTIVITIES

A. Provide in accordance with Division 01 General Requirements.

END OF SECTION

This page intentionally left blank

SECTION 40 05 15

PROCESS PIPE SUPPORTS

PART 1 – GENERAL

1.01 SUMMARY

A. Provide a complete system of pipe hangers, pipe supports, concrete inserts, anchor bolts and related appurtenances for supporting non-buried piping in accordance with this Section and applicable reference standards listed in Article 1.03.

B. Related Requirements

1. 40 05 13-Process Pipe & Fittings
2. 40 05 14-Process Pipe Couplings & Connectors
3. 40 05 17-Process Pipe Sleeves & Seals
4. 40 05 23-Process Valves & Strainers

1.02 PRICE AND PAYMENT PROCEDURES

A. Measurement and payment requirements: per Division 01 General Requirements.

1.03 REFERENCES

A. Reference Standards

B. Manufacturers Standardization Society Of The Valve And Fittings Industry (MSS)

1. MSS SP-58 (2002) Standard for Pipe Hangers and Supports - Materials, Design and Manufacture
2. MSS SP-69 (2003; R 2004) Standard for Pipe Hangers and Supports – Selection and Application
3. MSS SP-90 (2000) Guidelines on Terminology for Pipe Hangers and Supports

C. SMACNA Seismic Restraints Manual

1.04 ADMINISTRATIVE REQUIREMENTS

A. Coordination, Sequencing, and Scheduling: per Division 01 General Requirements.

1.05 SUBMITTALS

A. Submit in accordance with Division 01 General Requirements.

B. Shop Drawings

1. Submittals shall include complete piping layout drawings for each piping system. The piping layouts shall indicate the type of hanger and/or support, location, pipe support reactions transmitted to the structure, type of anchor, guides, and other pipe supporting appurtenances including the structural attachment hardware. Provide a description of the surface preparation and shop painting of all piping hangers and supports. The information shall include the manufacturing process and final dry film thicknesses.

C. Closeout and Maintenance Material Submittals: per Division 01 General Requirements.

1.06 QUALITY ASSURANCE

A. Provide in accordance with Division 01 General Requirements.

B. All piping hangers, supports and appurtenances shall be of approved standard design where possible. All piping hangers, supports and appurtenances shall be adequate to maintain the supported load in proper position under all operating conditions. The minimum working factor of safety for all supporting equipment, with the exception of springs, shall be one fifth the ultimate tensile strength of the material, assuming a minimum 10 feet of water filled pipe being supported.

C. All process piping and appurtenances connected to equipment shall be supported in such a manner as to prevent any strain or force from being imposed on the equipment.

D. Provide seismic restraints for all piping systems including but not limited to free standing, suspended or wall mounted piping. Use the restraints defined in the manual when the seismic criteria, and size of piping, are within the limits of the latest edition of the SMACNA at the time of bid opening. Select restraints from the tables that represent the highest seismic hazard class or level possible within the State in which the project resides. Provide members of material of equal strength to those in the standards where materials other than carbon steel are specified. All process piping supports shall be designed in accordance with the seismic criteria indicated in the Contract Documents.

1.07 DELIVERY, STORAGE, AND HANDLING

A. Provide in accordance with Division 01 General Requirements.

1.08 SITE CONDITIONS

A. Existing Conditions: per Division 01 General Requirements.

1.09 MAINTENANCE

A. Extra Materials: Furnish as specified below. Make interchangeable with and same material and workmanship as corresponding original parts.

1.10 WARRANTY

A. Special Warranty/Extended Correction Period

PART 2 – PRODUCTS

2.01 PROCESS PIPE SUPPORTS - GENERAL

A. Unless otherwise specified or shown on the Contract Drawings, process piping hangers and supports shall be a Manufacturer's standard product. All products specified or otherwise shall conform to the requirements of MSS SP-58 and MSS SP-69 standards.

2.02 PIPING FORCES

A. Provide supports for all pipe and tubing to prevent significant stresses in the material, valves, fittings and other connected pipe appurtenances. All supports and anchors shall be designed to secure the pipe in the intended position and alignment. All supports and anchors shall be designed to secure all pipe and tubing against excessive dislocation due to thermal expansion and contraction.

B. The pipe supports and anchor design shall specifically account for internal flow forces, all probable external forces from equipment connection, human contact, and all seismic forces. Provide and install all structural steel members as required to brace any piping system from excessive dislocation. All pipe fittings and appurtenances connected to equipment shall be supported in a manner to prevent any strain from being imposed on the equipment or piping systems. All pipe supports shall be installed such that they do not induce point loadings on the piping. All supports shall distribute pipe loads evenly along the pipe circumference.

C. All valves shall be provided with a dedicated independent supporting system. Supporting of valves by the connected piping shall not be acceptable. All electric, hydraulic, and pneumatic valve actuators shall be independently supported.

2.03 COUPLING SUPPORT

A. All couplings shown on the Drawings and as specified for connection to tanks, pumps, equipment, and appurtenances shall be provided with supports. The supports shall be located at the end opposite the tank, pump, equipment, and appurtenance.

B. All such couplings shall be rigidly supported, to prevent transfer of force to the equipment. Fixed or restraining supports shall not be installed between a flexible coupling and the connected piece of equipment/appurtenance.

2.04 SUPPORT SPACING

A. All supports shall be provided with appropriate spacing such that the sag of the pipe (if any) is within the limits of the piping Manufacturer. The support design and layout shall be such that it permits drainage of the pipe line. The support design and layout shall minimize bending stresses on the supported piping from concentrated loads between supports.

2.05 DISSIMILAR METALS

A. All stainless steel piping shall be isolated from all ferrous metals including galvanized steel. Provide a neoprene sheet and/or stainless steel protection shields to prevent direct contact when installed.

B. All copper piping shall be protected from galvanic corrosion from contact with ferrous metals. Provide corrosion protection by wrapping the copper pipe with 1/16 inch thick neoprene, sheet metal and a galvanized protection shield with isolators. Copper plated or PVC-coated hangers and supports may also be used to provide dielectric isolation.

2.06 NON-METALLIC PIPING

A. All uninsulated non-metallic piping shall be protected from local stress concentrations at each support point. Protection from local stresses shall be provided by PVC coated steel or 304 stainless steel protection shields.

B. All pipes which are bottom supported for 180 degrees shall be provided with arc shields. All pipes which are supported for 360 degrees shall be provided with protection shields for the entire exterior pipe circumference. All protection shields shall have an 18 gauge minimum thickness. All protection shields shall be a minimum of 12 inches in length. Securely fasten each protection shield to the pipe with 304 stainless steel straps not less than 1/2 inches in width.

2.07 INSULATED PIPE

A. All insulated piping shall be provided with a rigid insulating saddle at each pipe support location. Provide protection shields at each support location.

2.08 GENERAL PIPE SUPPORT SPACING

A. All solid metallic process piping, including but not limited to, cast iron, ductile iron, steel and stainless steel shall be provided with supports spaced in strict accordance with the pipe Manufacturer's recommendations. Provide a minimum of one (1) support per pipe section at joints, changes in direction, and valves. At a minimum provide supports for steel, stainless steel, cast iron, and ductile iron pipe in accordance with the following:

Pipe Size (Inches)	Maximum Span (feet)
1½ inches & smaller	5 feet
2 inches to 4 inches	10 feet
5 inches to 8 inches	15 feet
10 inches & larger	20 feet

B. Small diameter metallic piping, including but not limited to steel, copper piping, copper tubing, and stainless steel shall be provided with supports spaced at a maximum of five (5) feet.

C. All solid PVC and HDPE process piping shall be provided with supports spaced in strict accordance with the pipe Manufacturer's recommendation. At a minimum provide supports for PVC and HDPE piping in accordance with the following:

Pipe Size (Inches)	Maximum Span (feet)
1½ inches & smaller	4.5 feet
2 inches to 4 inches	6 feet
5 inches to 8 inches	9 feet
10 inches & larger	10 feet

D. All stainless steel piping shall be provided with neoprene isolators between the pipe and supports to prevent dielectric corrosion. Where stainless steel supports are used neoprene isolators shall not be required.

2.09 VERTICAL PIPING

A. Supports for all vertical pipes shall be provided when piping is in close proximity to the floor. All vertical piping shall be provided with Engineer approved supports spaced at intervals of not more than ten (10) feet by approved pipe collars, clamps, brackets, or wall rests.

B. All floor and wall supports for vertical piping runs shall provide rigid and solid support. All vertical pipes passing through pipe sleeves shall be secured using a pipe collar. Whenever possible, floor supports shall be used rather than wall supports. Concrete supports, base elbows, and base tees shall be used where possible and as shown on the Drawings.

2.10 SUPPORT LOCATIONS

A. Provide supports at all changes in directions of piping runs as well as at locations as shown on the Contract Drawings or as specified herein. Do not support piping from other piping or appurtenances including but not limited to metal stairs, ladders, walkways, or process equipment unless specifically directed or authorized in writing by the Engineer.

B. Pipe supports shall be provided to minimize lateral forces through valves as well as both sides of split type couplings and sleeve type couplings. All supports shall be designed and installed in a manner to minimize all forces on pump housings. Pump housings shall not be utilized to support connecting piping. Piping shall not be used to support process equipment and appurtenances.

2.11 PLASTIC PIPING SUPPORTS

A. Provide continuous supports for multiple and single PVC plastic piping runs whenever possible. Provide supports for single PVC piping with support spacing as recommended by the pipe Manufacturer. The support spacing shall not exceed three (3) feet under any circumstances. Whenever possible, multiple, suspended, horizontal PVC pipe runs, shall be supported by v-troughs or ladder type cable trays. Refer to the Contract Drawings for typical v-trough multiple pipe support details and requirements.

B. All ladder type cable trays for PVC piping support shall be shall be constructed of PVC coated aluminum, aluminum or stainless steel. The ladder rung spacing shall be a maximum of l2 inches. The tray width shall be a minimum of six (6) inches for single piping runs and l2 inches for double piping runs. Provide all appurtenances including but not limited to all hanger rods, rod couplings, concrete inserts, hanger clips, etc., required for a complete support system.

C. Individual plastic pipes shall be secured to the rungs of the cable tray by strap clamps or fasteners. The spacing between clamps and fasteners shall not be greater than ten (10) feet. The ladder type cable trays shall provide continuous support along the length of the pipe. Individual clamps, hangers and supports in contact with plastic pipe shall provide rigid support. The support shall be designed and installed so as to allow for longitudinal movement due to thermal expansion and contraction of the piping runs.

D. All ladder cable trays of the same type, style, and duty shall be supplied by a single Manufacturer. All ladder type cable trays for PVC piping supports shall be a product of the following Manufacturer:

1. MP Husky - Ladder Cable Tray

2. Cooper B-Line Inc. - Ladder Cable Tray

3. Engineer Approved Equal

2.12 MATERIALS OF CONSTRUCTION

A. Unless otherwise specified or shown on the Drawings, all rods, clamps, hangers, inserts, anchor bolts, brackets, components, and appurtenances for "Interior" pipe supports shall be constructed of 304 stainless steel. All interior pipe clamps on plastic pipe shall be provided with a plastic coating or neoprene isolator. All supports for copper pipe shall be copper plated or shall have a minimum 1/16 in plastic coating.

B. All rods, clamps, hangers, inserts, anchor bolts, brackets, components, and appurtenances for exterior pipe, submerged pipe, polymer piping, interior piping within chemical containment areas, pipe within unheated structures, pipe within tanks, interior pipe within manholes, interior pipe within channels, and exterior pipe within channels shall be constructed of stainless steel. The grade of stainless steel shall be in accordance with the following criteria.

C. All process piping support systems shall be constructed of the following materials based on location unless otherwise specified or indicated on the Drawings:

D. All Submerged Piping: 316 Stainless Steel

E. All Outdoor Piping: 316 Stainless Steel

F. All Interior In-Basin, In-Channel, as well as Piping in Access Vaults (Located Above the Maximum Water Level): 304 Stainless Steel

G. All Interior Building Piping: 304 Stainless Steel

H. All fasteners and related hardware for supports including but not limited to nuts, bolts, and washers shall be 316 stainless steel regardless of location. Fasteners for submerged support locations shall be 316 stainless steel.

2.13 HORIZONTAL PIPING HANGERS AND SUPPORTS

A. Unless otherwise specified or indicated on the Contract Drawings, provide factory fabricated horizontal piping hangers and supports conforming to MSS SP-58 standards. Horizontal piping supports and hangers shall be one of the following Manufacturers Standardization Society of the Valve and Fittings Industry (MSS) types listed below.

B. The specific type of support shall be selected by the Contractor to suit the horizontal piping system layout in accordance with MSS SP-69 standards as well as the piping Manufacturer's published support requirements. Whenever possible, use only one (1) type of support system by one (1) Manufacturer for each piping service. Select the size of hangers and supports to exactly fit the nominal pipe outside diameter for bare piping, and to exactly fit around piping insulation with a saddle or shield for all insulated piping.

C. Type 5 - Pipe Hangers, Type 12 - Pipe Clamps, and Type 26 - Pipe Clips shall not be used. Type 3 - Three Bolt Pipe Clamps shall not be used on insulated piping systems. Type 24 - U-Bolts shall only be used on trapeze type hanger systems or fabricated frames.

2.14 SINGLE PIPE CLEVIS HANGERS

A. Whenever possible, single process piping runs shall be supported by single pipe adjustable clevis type hangers, (MSS Type 1), suspended by hanger rods from structural steel members, concrete ceilings, or the bottom of trapeze hangers. The clevis type hanger shall be specifically designed for the process piping type being supported as follows:

1. Adjustable Clevis Hangers:
    a. Anvil International Inc. - Figure No. 260
    b. Carpenter & Patterson Inc. - Figure No. 100
    c. PHD Manufacturing Inc. - Figure No. 425
    d. Engineer Approved Equal
2. Adjustable Clevis Hangers (Insulated Pipe):
    a. Anvil International Inc. - Figure No. 300
    b. Carpenter & Patterson Inc. - Figure No. 100EL
    c. PHD Manufacturing Inc. - Figure No. 430
    d. Engineer Approved Equal
3. Adjustable Clevis Hangers (Cast Iron or Ductile Iron Pipe):
    a. Anvil International Inc. - Figure No. 590
    b. Carpenter & Patterson Inc. - Figure No. 100DI
    c. PHD Manufacturing Inc. - Figure No. 420
    d. Engineer Approved Equal

2.15 PIPE CLAMPS

A. Single process piping runs supported by Pipe Clamps, (MSS Type 4), shall be in accordance with the following:

1. Anvil International Inc. - Figure No. 212
2. Carpenter & Patterson Inc. - Figure No. 175
3. PHD Manufacturing Inc. - Figure No. 520/521
4. Engineer Approved Equal

2.16 ADJUSTABLE BAND HANGERS

A. Single process piping runs supported by Adjustable Band Hangers, (MSS Type 7), shall be in accordance with the following:

1. Carpenter & Patterson Inc. - Figure No. 1A
2. PHD Manufacturing Inc. - Figure No. 180, 181, & 183
3. Engineer Approved Equal

2.17 PIPE SADDLE SUPPORTS

A. Single process piping runs supported by Pipe Saddle Supports, (MSS Type 36), shall be in accordance with the following:

1. Anvil International Inc. - Figure No. 258
2. PHD Manufacturing Inc. - Figure No. 880
3. Engineer Approved Equal

B. Provide pipe base supports and cast floor flanges for all pipe saddle supports. Refer to the details on the Drawings for additional requirements.

2.18 PIPE STANCHION SADDLES

A. Single process piping runs supported by Pipe Stanchion Saddles, (MSS Type 37), shall be in accordance with the following:

1. Anvil International Inc. - Figure No. 259
2. Carpenter & Patterson Inc. - Figure No. 125
3. PHD Manufacturing Inc. - Figure No. 882
4. Engineer Approved Equal

B. Provide pipe base supports and floor flanges for all pipe stanchion saddles. Refer to the details on the Drawings for additional requirements.

2.19 ADJUSTABLE ROLLER HANGERS

A. Single process piping runs supported by Adjustable Roller Hangers, (MSS Type 43), shall be in accordance with the following:

1. Anvil International Inc. - Figure No. 181
2. Carpenter & Patterson Inc. - Figure No. 140

3. PHD Manufacturing Inc. - Figure No. 470 & 475

4. Engineer Approved Equal

2.20 PIPE ROLL STANDS

A. Single process piping runs supported by Pipe Roll Stands, (MSS Type 44), shall be in accordance with the following:

1. Anvil International Inc. - Figure No. 271

2. Carpenter & Patterson Inc. - Figure No. 54

3. PHD Manufacturing Inc. - Figure No. 486

4. Engineer Approved Equal

2.21 PIPE ROLLS & PLATES

A. Single process piping runs supported by Pipe Rolls and Plates, (MSS Type 45), shall be in accordance with the following:

1. Anvil International Inc. - Figure No. 277

2. Carpenter & Patterson Inc. - Figure No. 63

3. Engineer Approved Equal

2.22 PIPE GUIDES & SLIDE PLATES

A. Provide structural slide assemblies and guides (MSS Type 35) using reinforced polytetrafluoroethylene (PTFE) or graphite slides to allow for longitudinal pipe movement. Slide materials shall be suitable for the system operating temperatures, atmospheric conditions, and bearing loads encountered. Lateral restraints shall be provided as needed. Where slides do not require provisions for lateral restraint the following methods may be used:

B. For piping systems four (4) inches and larger when the temperature of the medium is 60 Degrees F or higher, a Pipe Covering Protective Saddle (MSS Type 39) which is welded to the pipe may freely rest on the support.

C. For piping systems less than four (4) inches a Pipe Protection Shield (MSS Type 40) attached to the pipe or insulation, may freely rest on a the support.

D. For piping systems four (4) inches and larger carrying medium less that 60 Degrees F a Pipe Protection Shield (MSS Type 40), attached to the pipe or insulation, may freely rest on the support.

E. In cases where there are high system temperatures and welding to piping is not desirable, pipe slide assemblies and guides shall include a pipe cradle, welded to the guide structure and strapped securely to the pipe. The pipe shall be separated from the slide material by at least four (4) inches or by an amount adequate for the insulation, whichever is greater.

F. Except as otherwise indicated, provide factory fabricated pipe guides and slide plate systems. Provide pipe guides and slide plates (MSS Type 35) in accordance with the following:

1. Anvil International Inc. - Figure No. 439
2. PHD Manufacturing Inc. - Figure No. 690
3. Carpenter & Patterson Inc. - Figure No. 1010
4. Engineer Approved Equal

2.23 EXTENDED VERTICAL PIPING CLAMPS

A. Except as otherwise indicated, provide factory fabricated extended vertical piping clamps. Use only one type by one Manufacturer for each piping service. Select size of hangers and supports to exactly fit pipe size for bare piping. Provide larger diameter clamps to accommodate insulated piping and shields. Provide vertical piping two bolt extended riser clamps in accordance with the following:

1. Anvil International Inc. - Figure No. 100
2. Carpenter & Patterson Inc. - Figure No. 267
3. PHD Manufacturing Inc. - Figure No. 545
4. Engineer Approved Equal

2.24 OFFSET PIPE CLAMPS

A. Except as otherwise indicated, provide factory fabricated offset vertical piping clamps. Use only one type by one Manufacturer for each piping service. Select the size of clamps and supports to exactly fit the pipe size for bare piping. Copper clad or PVC coated clamps shall be used on all copper piping. Provide vertical piping two bolt offset riser clamps in accordance with the following:

1. Anvil International Inc. - Figure No. 103
2. Carpenter & Patterson Inc. - Figure No. 179
3. PHD Manufacturing Inc. - Figure No. 535
4. Engineer Approved Equal

2.25 PIPE RISER CLAMPS

A. Pipe riser clamps (MSS Type 8) shall be used to support vertical piping runs extending through floor slabs. Copper clad or PVC coated clamps shall be used on copper pipes. Insulation shall be provided for the entire diameter of insulated pipes prior to installing riser clamps. Insulation shall not be damaged by clamp installation. Provide pipe riser clamps in accordance with the following:

1. Anvil International Inc. - Figure No. 261
2. Carpenter & Patterson Inc. - Figure No. 126
3. PHD Manufacturing Inc. - Figure No. 550, 551, or 553
4. Engineer Approved Equal

2.26 WALL PIPE SUPPORTS

A. Where pipe runs are in close proximity to supports including but not limited to walls, beams, and columns; and are also located an excessive distance from ceilings or the underside of beams, welded stainless steel wall pipe supports shall be used for hanging pipe. In cases where single pipes rest on top of bracket pipe supports, all attachments shall meet requirements as specified under multiple pipe hangers. Provide Structural Wall Pipe Supports in accordance with the following:

B. For Light Duty Applications (MSS Type 31). Light duty applications shall be defined as small diameter piping less than two (2) inches nominal pipe size.

1. PHD Manufacturing Inc. - Figure No. 850
2. Carpenter & Patterson Inc. - Figure No. 69
3. Engineer Approved Equal

C. For Medium Duty Applications (MSS Type 32). Medium duty applications shall be defined as three (3) inch through six (6) inch PVC or Stainless Steel piping.

1. PHD Manufacturing Inc. - Figure No. 855
2. Carpenter & Patterson Inc. - Figure No. 84
3. Engineer Approved Equal

D. For Heavy Duty Applications (MSS Type 33). Heavy duty supports shall be used for all "Type DI/1" piping and all piping larger than six (6) inch nominal pipe size.

1. PHD Manufacturing Inc. - Figure No. 860

2. Carpenter & Patterson Inc. - Figure No. 139

3. Engineer Approved Equal

E. Where applicable and approved by the Engineer the use of "C" channels with stainless steel brackets and pipe clamps shall be provided. All members shall be securely fastened to walls, columns, or other Engineer approved structural members. Attachment shall utilize double expansion shields or other methods as approved by the Engineer. Additional wall bearing plates shall be provided where required.

2.27 MULTIPLE PIPE HANGERS

A. Suspended multiple pipes, running parallel in the same horizontal plane, which are adjacent to each other shall be suspended by trapeze type hangers or wall brackets. Trapeze hangers shall consist of stainless steel or aluminum structural channels supported from stainless steel threaded rods. Whenever possible attach multiple pipe supports to concrete walls, columns, structural steel, and other Engineer approved support members.

B. Provide all other necessary accessories including but not limited to rods, concrete inserts, "C" clamps, beam clamps, welded beam attachments, and expansion shields, as required and as specified for a complete piping support system.

C. Unless otherwise specified or indicated on the Drawings pipe anchors used for attaching pipe to trapeze or multiple pipe wall brackets shall be anchor or pipe chairs as required.

D. The anchors shall be constructed of stainless steel. All chair "U" bolts shall be tightened to allow freedom of movement for normal expansion and contraction of piping runs except where pipe shall be anchored to control direction of movement or act as a thrust anchor.

2.28 HANGER ROD ATTACHMENTS & BEAM CLAMPS

A. All hanger rod attachments shall be stainless steel, machine threaded, and passivated after fabrication. The strength of the rod shall be based on its root diameter. Hanger rods shall be attached to concrete structures using concrete inserts. Threaded rods shall not be formed or bent in the field.

B. All inserts shall be malleable iron, or steel with a galvanized finish. Beam clamps, "C" clamps, or welded beam attachments shall be used for attaching hanger rods to structural steel members.

C. Where required and as approved by the Engineer, expansion anchors shall be used for attaching to concrete structures. Provide a bituminous coating for all iron or steel in direct contact with concrete.

D. All Top Beam C-Clamps (MSS Type 19) and C-Clamps (MSS Type 23) shall be torqued in accordance with MSS SP-69 standards. Both locknuts and retaining devices shall be furnished by the piping support Manufacturer.

E. Field fabricated clamp bodies and retaining devices shall not be acceptable. Side Beam or Channel Clamps (MSS Type 20) shall be provided with an added iron heel plate or adaptor. U-bolts (MSS Type 24) shall only be used in conjunction with trapeze hanger systems or on fabricated frames. Whenever possible utilize Center Beam Clamps (MSS Type 21).

2.29 ANCHORS

A. The Contractor shall anchor piping at locations indicated on the Drawings or required per the specifications. The anchor design and materials shall be in accordance with ANSI/ASME B.31 standards. Additional anchoring shall be provided as approved by the Engineer. All anchors shall be 316 stainless steel regardless of installation location.

B. The length of expansion bolts shall be sufficient to place the wedge portion of the bolt a minimum of one (1) inch behind the steel reinforcement. Concrete anchors for ceiling mounted pipe supports and appurtenances shall be adhesive or expansion type.

C. Anchors for wall supports, floor supports and all related appurtenances shall be in accordance with the following. Size all supports as required for proper support as well as to provide compatibility with the associated pipe support.

1. Hilti - Kwok-Bolt
2. Simpson Strong-Tie - Wedge All
3. Powers Power-Stud
4. Engineer Approved Equal

2.30 INSULATION SHIELDS & SADDLES

A. Provide Pipe Covering Protective Saddles (MSS Type 39) on insulated pipe four (4) inches and larger when the temperature of the medium is 60 degrees F or higher. All Pipe Covering Protective Saddles shall be welded to the pipe. The saddle materials of construction shall match the connecting pipe.

B. Provide Pipe Protection Shields (MSS Type 40) for use on insulated piping systems less than four (4) inches. Shields may be used on piping systems larger than four (4) inches when the temperature of the medium is 60 Degrees F or less. All shields shall be 304 stainless steel.

C. Single process piping protective sleeves (MSS Type 40), shall be stainless steel, 14 gage sheet metal. All protective shields shall be in accordance with the following:

1. Anvil International Inc. - Figure No. 167

2. Carpenter & Patterson Inc. - Figure No. 265

3. PHD Manufacturing Inc. - Figure No. 170

4. Engineer Approved Equal

2.31 HORIZONTAL SMALL DIAMETER PIPE SUPPORTS

A. Horizontal piping runs less than three (3) inches in diameter shall be held in position by supports fabricated from 304 stainless steel or aluminum "C" channels, welded post bases and pipe clamps.

B. Where required to assure adequate support, fabricate supports using two vertical members and post bases connected together by a horizontal member of sufficient load capacity to support the piping run. Wherever possible supports shall be anchored to nearby walls or other structural members to provide horizontal rigidity. More than one pipe may be supported from a common fabricated support as approved by the Engineer.

2.32 SMALL DIAMETER PLASTIC PIPE SUPPORT

A. Provide all pipe supports for closely spaced vertical "Plastic Piping Systems" three (3) inches and smaller as required to provide a rigid support system. The interval of vertical support spacing shall be as specified, but in no case shall the vertical spacing interval exceed 6 feet between supports. The support system shall consist of a framework suitably anchored to floors, ceilings, roofs or other Engineer approved structural members.

B. Vertical and horizontal supporting members shall be 304 stainless steel or aluminum "U" shaped channels. The assemblies shall be furnished complete with all nuts, bolts and fittings required for a complete assembly including end caps for all support members.

C. Vertical piping shall be secured to the horizontal members by pipe clamps or pipe straps. For support of exterior pipe, submerged pipe, pipe within outdoor structures and interior pipe within channels all components shall be Type 316 stainless steel. Piping supports in chemical containment and storage areas shall be PVC coated. In all other areas, all components shall be 304 stainless steel or aluminum.

D. The design of each individual framing system for small diameter plastic pipe support systems shall be the responsibility of the Contractor. Shop drawings, as

specified above shall be submitted and shall show all details of the installation, including dimensions and types of supports. In all instances the completed frame shall be adequately braced to provide a complete rigid structure when all the piping has been attached.

E. The framework for small diameter plastic piping supports shall be in accordance with the following. Size all supports as required for proper support as well as to provide compatibility with the associated piping material. Use only one type by one Manufacturer for each piping service. All framework for small diameter plastic piping shall be a product of the following Manufacturer:

1. Unistrut Corporation
2. Globe-Strut
3. Power Strut
4. Cooper B-Line Inc.
5. Engineer Approved Equal

2.33 CUSTOM FABRICATED PIPE SUPPORTS

A. Whenever possible the Contractor shall utilize standard piping supports and appurtenances. If standard supports are not suitable for an application, the Contractor shall furnish custom fabricated structural steel shapes, concrete, and anchor hardware for support of process piping systems. All custom fabricated supports shall be of approved materials of construction identical to items previously specified herein. All anchor hardware shall be similar to items previously specified herein and shall meet the minimum requirements for support as approved by the Engineer. All custom fabricated piping supports shall be subject to the approval of the Engineer.

B. All pipe support systems shall meet all requirements of this Section and all related Sections as well as the Drawings. Complete design details of the pipe support system and system components shall be submitted for review and approval as specified. No hanger or support shall be installed without the written approval of the Engineer. The pipe support system shall not impose loads on the supporting structures in excess of the loads for which the supporting structure was designed.

2.34 THIN-WALLED PIPE SUPPORTS

A. Supports for thin walled pipe shall be provided per the requirements of this specification, and shall include all required saddle bracing to avoid damaging the pipe at the point of contact with the associated support.

2.35 CONCRETE INSERTS

A. Provide inserts (MSS Type 18) to allow a connection point for hanger rods in concrete. Inserts shall be secured to concrete forms before concrete is placed. Continuous inserts which allow more adjustment may be used if they otherwise meet the requirements for (MSS Type 18) inserts. Provide a bituminous coating for all metallic inserts in direct contact with concrete. All concrete inserts shall be in accordance with the following:

1. Anvil International Inc. - Figure No. 282
2. Carpenter & Patterson Inc. - Figure No. 650
3. PHD Manufacturing Inc. - Figure No. 951
4. Engineer Approved Equal

2.36 SOURCE QUALITY CONTROL

A. Provide in accordance with Division 01 General Requirements.

PART 3 – EXECUTION

3.01 INSTALLERS

A. Qualified per Division 01 General Requirements.

3.02 EXAMINATION

A. Verification of Conditions

3.03 INSTALLATION

A. Special Techniques

1. Install hangers, supports, clamps, and attachments to support piping properly from building structures in accordance with MSS SP-69. Arrange for grouping of parallel runs of horizontal piping to be supported together on trapeze type hangers where possible. Install supports with maximum spacing complying with MSS SP-69. Where piping of various sizes is to be supported together by trapeze hangers, space hangers for smallest pipe size or install intermediate supports for smaller diameter pipe. Do not use wire or perforated metal to support piping, and do not support piping from other piping. No piping shall be supported from existing precast concrete tees, metal stairs, ladders and/or walkways unless specifically directed or authorized by the Engineer.

2. Except as otherwise indicated for exposed continuous pipe runs, install hangers and supports of same type and style as installed for adjacent similar piping.

3. Install hangers and supports such that piping live and dead loading, and stresses from movement, will not be transmitted to connected equipment. Equipment shall not be used to support piping.

4. Except as otherwise permitted, make provisions for vertical adjustment of all hangers after installation. Locate one hanger immediately adjacent to each change of direction and offset, additional hangers where installation of inline equipment produces concentrated loads. Provide additional guides or supports at offsets in piping as necessary to prevent deflection of the pipe axis due to expansion or pressure forces except where right angle bends are utilized to compensate for expansion.

5. Provide hangers and/or supports immediately adjacent to either side of all in-line instruments, including but not limited to valves and flow meters.

B. Sequences

1. The Contractor shall proceed with the installation of piping and supports only after any building structural work has been completed and all new concrete has reached its specified design strength.

C. System Integration

1. The installation of pipe support systems shall in no way interfere with the operation of monorails, access hatches, building system, overhead doors, etc. The installed systems shall not interfere with maintenance and operational access to any equipment installed under this Section, or any other related Section.

3.04 FIELD QUALITY CONTROL

A. Provide in accordance with Division 01 General Requirements.

3.05 STARTUP & COMMISSIONING

A. Provide in accordance with Division 01 General Requirements.

1. All pipe support systems shall be tested for compliance with this Section. After installation, each pipe support system shall be tested in conjunction with the respective piping pressure tests as specified in section 40 05 13 "PROCESS PIPE AND FITTINGS". If any part of the pipe support system proves to be defective or inadequate, it shall be repaired or augmented under this Section to the satisfaction of the Engineer at no additional cost to the Owner or Engineer.

3.06 CLOSEOUT ACTIVITIES

A. Provide in accordance with Division 01 General Requirements.

3.07 PROTECTION

A. All sharp edges and comers within 7 feet of the floor or walking surfaces shall be ground down and/or protected with plastic protective covers.

END OF SECTION

This page intentionally left blank.

SECTION 40 05 17

PROCESS PIPE SLEEVES AND SEALS

PART 1 – GENERAL

1.01 SUMMARY

A. Section Includes

1. Provide process pipe penetration assemblies, including, but not limited to, all pipe sleeves and seals, in accordance with this Section and applicable reference standards listed in Article 1.03.

B. Related Requirements

1. Section 40 00 00 – Basic Process Materials & Methods
2. Section 40 05 13 – Process Pipe & Fittings

1.02 PRICE AND PAYMENT PROCEDURES

A. Measurement and payment requirements: per Division 01 General Requirements.

1.03 REFERENCES

A. Reference Standards

B. AMERICAN WATER WORKS ASSOCIATION (AWWA)

1. AWWA C110/A21.10 (2008) Ductile-Iron and Gray-Iron Fittings for Water
2. AWWA C111/A21.11 (2007) Rubber-Gasket Joints for Ductile-Iron Pressure Pipe and Fittings
3. AWWA C115/A21.15 (2005) Flanged Ductile-Iron Pipe With Ductile-Iron or Gray-Iron Threaded Flanges
4. AWWA C151/A21.51 (2002; Errata 2002) Ductile-Iron Pipe, Centrifugally Cast, for Water
5. AWWA C153/A21.53 (2006) Ductile-Iron Compact Fittings for Water Service

C. ASTM INTERNATIONAL (ASTM)

1. ASTM D 2000 (2008) Standard Classification System for Rubber Products in Automotive Applications
2. ASTM D 297 (1993; R 2006) Rubber Products - Chemical Analysis

3. ASTM D 395 (2003; R 2008) Standard Test Methods for Rubber Property - Compression Set
4. ASTM D 412 (2006ae2) Standard Test Methods for Vulcanized Rubber and Thermoplastic Elastomers - Tension
5. ASTM F 593 (2002; R 2008) Stainless Steel Bolts, Hex Cap Screws, and Studs
6. ASTM F 594 (2008) Standard Specification for Stainless Steel Nuts

1.04 ADMINISTRATIVE REQUIREMENTS

A. Coordination, Sequencing, and Scheduling: per Division 01 General Requirements

1.05 SUBMITTALS

A. Submit in accordance with Division 01 General Requirements.

1.06 QUALITY ASSURANCE

A. Provide in accordance with Division 01 General Requirements.

1.07 DELIVERY, STORAGE, AND HANDLING

A. Provide in accordance with Division 01 General Requirements.

1.08 SITE CONDITIONS

A. Existing Conditions: per Division 01 General Requirements.

1.09 MAINTENANCE

A. Extra Materials: Furnish as specified below. Make interchangeable with and same material and workmanship as corresponding original parts.

PART 2 – PRODUCTS

2.01 PIPE SLEEVES

A. Provide pipe wall sleeves and seal penetrations as indicated on the Drawings. Unless otherwise specified or indicated on the Drawings, all pipe sleeves 24 inches and smaller be constructed of High Density Polyethylene (HDPE). The use of ferrous metallic sleeves shall not be acceptable. All pipe sleeves larger than 24 inches shall be constructed of 304L stainless steel. Pipe sleeves of all sizes and materials shall include a two (2) inch (minimum) circumferential water stop welded or integrally molded to the exterior of the sleeve at its midpoint. The sleeve length shall be specifically coordinated with the respective thickness of the penetrated structural wall, floor or ceiling. Unless otherwise indicated, ends of sleeves shall be flush with the wall or ceiling and extend a minimum of four (4)

inches above finished floors. Refer to the piping penetration details on the Drawings for additional information and requirements. Pipe sleeves which penetrate masonry block walls shall not require an integral water stop.

B. Pipe sleeves which are to be sealed with mechanical seals shall be sized in accordance with the recommendations of the seal manufacturer.

C. Sleeves to be sealed by caulking or sleeves for insulated piping shall be sized, constructed and installed as specified or as indicated on the Drawings. All pipe sleeves which penetrate fire rated walls, floors or ceilings shall be 304L stainless steel regardless of size.

D. All pipe sleeves shall be supplied by a single Manufacturer. All wall pipe sleeves shall be a product of the following Manufacturer:

1. Pipeline Seal & Insulator, Inc.
2. Advance Products & Systems, Inc. - "Infinity Series"
3. Engineer Approved Equal

2.02 WALL CASTINGS (WALL PIPE)

A. Provide wall castings (wall pipe) as specified or indicated on the Drawings. All wall castings shall be constructed of ductile iron conforming to AWWA C151/A21.51 standards, Class 53, with a diameter to match the connecting piping system. Ductile iron, wall castings shall be grade 60-42-10. All wall castings shall have minimum physical properties in accordance with the following:

1. Minimum Tensile Strength: 60,000 psi
2. Minimum Yield Strength: 42,000 psi
3. Minimum Elongation: 10%

B. Flanges and/or mechanical joint bells shall be drilled and tapped for studs where flush with the wall. Castings shall be provided with a two (2) inch minimum circumferential flange/waterstop integrally cast with or welded to the pipe. All welded flanges/waterstops shall include a continuous 360 degree fillet weld on both sides of the collar over the entire circumference of the wall pipe. The pipe collar shall be designed for use as both a thrust collar and a water stop mechanism.

C. Unless otherwise noted, all cast flanges shall be in accordance with AWWA C110/A21.10, AWWA C153/A21.53 and AWWA C115/A21.15 standards. All mechanical joints shall be in accordance with AWWA C111/A21.11 standards. Fabricated mechanical joint bells shall be in accordance with applicable portions of AWWA C153/A21.53 standards. Flanges shall be designed for a 125 lb drilling pattern.

D. For castings set flush with walls, locate the flange/waterstop at the center of the overall length of the casting. For castings which extend through the wall locate the flange/waterstop within the middle third of the wall. All ductile iron wall castings shall be provided with a two part epoxy prime and finished coating system in accordance with Specification 09 90 00 Paints And Coatings. In addition, provide a bituminous coating on all surfaces of wall castings which are in contact with concrete.

E. Stainless steel wall pipes shall be provided for all stainless steel piping systems to match the connecting piping. All stainless steel wall pipes shall be Schedule 10S, Type 304L stainless steel with a two (2) inch minimum circumferential flange/waterstop integrally cast with or welded to the pipe. All stainless steel wall pipes shall be in accordance with the requirements of Stainless Steel piping as noted in specification 40 05 13 Process Pipe and Fittings.

F. All ductile iron wall castings shall be supplied by a single Manufacturer. All wall castings (wall pipes) shall be a product of the following Manufacturer:

1. American Cast Iron Pipe Company
2. Clow Water Systems Company
3. Engineer Approved Equal

2.03 MECHANICAL PIPE SEALS

A. Unless otherwise specified or indicated on the Drawings; all core drilled or sleeved wall, floor and ceiling penetrations shall be provided with a modular, mechanical type, sealing system. The sealing system shall consist of inter-locking synthetic rubber links shaped to continuously fill the annular space between the pipe and the cored opening or pipe sleeve. The elastomeric element shall be sized and selected in accordance with the Manufacturer's recommendations and sizing guidelines. Coloration shall be throughout the elastomer as indicated below for the respective seal materials to allow for positive field identification. Each link shall have a permanent identification of the size and Manufacturer's name molded into it. Each seal shall be rated by the manufacturer for positive sealing at a minimum pressure of 40 feet of water or 20 psig. All mechanical pipe seals shall have the following properties. Provide mechanical pipe seals for each respective application as indicated in the following paragraphs:

1. For "General Service Applications" utilize EPDM seals per ASTM D 2000 standards. Color shall be black. Pressure plates shall be constructed of reinforced nylon polymer or composite material. Seals shall be rated for a temperature range of -40 to 250 degrees F. The minimum EPDM durometer hardness (Shore A) shall be 50 (+/-) 5. Areas where this type of seal shall be used include but are not limited to the following:

   a. Dry Process Areas

   b. Below Grade Vaults

2. For "Thin Wall Pipe Applications" utilize EPDM seals per ASTM D 2000 standards. Color shall be blue. Pressure plates shall be constructed of reinforced nylon polymer or composite material. Seals shall be rated for a temperature range of -40 to 250 degrees F. The minimum EPDM durometer hardness (Shore A) shall be 40 (+/-) 5. Examples of thin walled pipe applications include but are not limited to the following:

   a. Copper Tubing

3. For "Fire Rated or High Temperature Penetration Applications" utilize Silicone or rubber seal elements. All seals shall meet or exceed the fire rating requirements of the wall, floor or ceiling which is penetrated. Provide a double seal for all fire rated penetrations. Color shall be gray or red. All seals shall be rated for a temperature range of at least -67 to 400 degrees F. Pressure plates shall be constructed of corrosion resistant zinc plated steel. All Fire Rated seals shall be Factory Mutual (FM) approved for the rating of the constructed element being penetrated. Refer to the Drawings for the fire ratings of each respective area.

4. For "Oil Resistant Applications" utilize Nitrile (NBR/Buna-N) seal elements. Typical oil resistant applications include but are not limited to areas with exposure to solvents, oil, and hydraulic fluid. Color shall be green. Pressure plates shall be constructed of reinforced nylon polymer or composite material. Temperature rating shall be -40 degrees F to 210 degrees F. The minimum EPDM durometer hardness (Shore A) shall be 50 (+/-5).

B. Provide mechanical seals with wall sleeves for new construction where specified or as indicated on the Drawings. Provide seals for cored openings for existing construction where pipe penetrations pass through a sound concrete wall. When a pipe penetration into a tank or other vessel is below the high water level, provide two (2) mechanical seals, one flush with the inside wall and one flush with the outside wall. Mechanical seal hardware shall be oriented towards the wall side which allows for future access. Refer to the Drawings for additional details and requirements.

C. All mechanical pipe seals shall be supplied by a single Manufacturer. All pipe seals shall be a product of the following Manufacturer:

1. Pipeline Seal & Insulator, Inc. - "Link-Seal"
2. Advance Products & Systems, Inc. - "Innerlynx"
3. Engineer Approved Equal

2.04 MECHANICAL PIPE SEAL PROPERTIES

A. All EPDM mechanical pipe seals shall be designed and constructed in accordance with the following minimum physical and chemical properties:

1. Tensile Strength: 1,450 psi per ASTM D 412
2. Elongation At Break: 400% per ASTM D 412
3. Compression Set: 15% 22 hrs. at 150 degrees F per ASTM D 395
4. Specific Gravity: 1.10 per ASTM D 297

B. All Silicone mechanical pipe seals shall be designed and constructed in accordance with the following minimum physical and chemical properties:

1. Tensile Strength: 860 psi per ASTM D 412
2. Elongation At Break: 250% per ASTM D 412
3. Compression Set: 38% 22 hrs. at 150 degrees F per ASTM D 395
4. Specific Gravity: 1.30 per ASTM D 297

C. All Nitrile (NBR/Buna-N) mechanical pipe seals shall be designed and constructed in accordance with the following minimum physical and chemical properties:

1. Tensile Strength: 1,200 psi per ASTM D 412
2. Elongation At Break: 300% per ASTM D 412
3. Compression Set: 45% 22 hrs. at 150 degrees F per ASTM D 395
4. Specific Gravity: 1.15 per ASTM D 297

2.05 SEALING OF FLAMMABLE PIPE

A. All pipe sleeves which penetrate fire rated walls, floors or ceilings shall be 304L stainless steel regardless of size. In cases where small diameter flammable plastic pipes penetrate fire rated construction, provide an intumescent pipe wrap with a rating which meets or exceeds the fire resistance requirements of the area. Examples of flammable plastic pipes include but are not limited to PVC, UPVC, ABS, polypropylene, and polyethylene. All intumescent pipe wrap shall be water resistant as well as halogen and plasticizer free. Provide a minimum fire expansion rate of 40:1.

B. In cases where larger diameter flammable plastic pipes penetrate fire rated construction, provide an intumescent pipe collar with a rating which meets or exceeds the fire resistance requirements of the area. The collar shall be surface mounted for existing construction. Provide centrally cast flush fitted collars for new construction.

C. Pipe collars shall be galvanized or epoxy coated steel and contain high-performance intumescent material. On exposure to heat from a fire the pipe collars shall rapidly expand inwards to squeeze the collapsing flammable pipe until the aperture is completely sealed. For horizontal installations the collar may be surface mounted or recessed depending upon the construction installation requirements. Install a collar on one or both sides of walls, floors, or ceilings

according to the direction of risk. Provide fire rated insulation, caulk, putty, mortar, pillows and hardware to provide a complete installation.

D. All fire rated sealing systems shall be supplied by a single Manufacturer. All fire rated pipe collars, wraps and related appurtenances shall be a product of the following Manufacturer:

1. 3M Fire Protection Products
2. Hilti Corporation
3. Biofireshield Company
4. Engineer Approved Equal

2.06 HARDWARE

A. All process pipe sleeve and seal hardware, including mechanical seal hardware shall be 316 stainless steel in accordance with ASTM F 593 and ASTM F 594 standards. The minimum hardware tensile strength shall be 60,000 psi. Provide dielectric insulation and/or isolation between ferrous metal surfaces and stainless steel hardware.

B. Source Quality Control

1. Provide in accordance with Division 01 General Requirements.

PART 3 – EXECUTION

3.01 EXAMINATION

A. Verification of Conditions

3.02 INSTALLATION

A. Provide sleeves, seals and wall castings where piping passes through walls, floors, ceilings, and roofs. Do not install sleeves through structural members of work, except as detailed on the Drawings, or as approved by the Engineer. Install all sleeves and castings accurately centered on pipe runs. Size wall sleeves so that piping and insulation (if any) will have free movement in the sleeve, including allowance for thermal expansion; but not less than two (2) pipe sizes larger than the piping run.

B. Provide and install sleeves and wall castings with a length equal to thickness of the construction being penetrated. Unless otherwise specified or indicated on the Drawings all wall sleeves and castings shall be finished flush to the wall construction being penetrated. Unless otherwise indicated, floor sleeves shall be extended a minimum of four (4) inches above the finished floor in Process Areas. Provide temporary supports of sleeves, and provide temporary closure to prevent concrete and other materials from entering sleeves during construction.

C. Mechanical Pipe Seals

1. Center the pipe in the cored or sleeved opening. Provide temporary support for the pipe on both ends. Loosen the rear pressure plate with nut just enough so mechanical links move freely. Connect both ends of belt around the pipe. Check to be sure all bolt heads are facing the installer. Extra slack or sag is normal. Do not remove links if extra slack exists. On smaller diameter pipe, links may require stretching. Slide belt assembly into annular space. For larger size belts, start inserting the mechanical seal assembly at the 6 O'clock position and work both sides up toward the 12 O'clock position in the annular space.

2. Using a hand socket or offset wrench only, start at 12 O' Clock. Do not tighten any bolt more than 4 turns at a time. Continue in a clockwise manner until links have been uniformly compressed. Approximately 2 or 3 rotations are typical. Make 2 or 3 more passes at 4 turns per bolt maximum, tightening all bolts clockwise until all sealing elements "bulge" around all pressure plates. If the mechanical seals include type 316 stainless steel bolts, hand wrench tighten only without use of power tools to prevent galling.

3.03 FIELD QUALITY CONTROL

A. Provide in accordance with Division 01 General Requirements.

3.04 STARTUP & COMMISSIONING

A. Provide in accordance with Division 01 General Requirements.

3.05 CLOSEOUT ACTIVITIES

A. Provide in accordance with Division 01 General Requirements.

END OF SECTION

SECTION 40 05 23

PROCESS VALVES AND STRAINERS

PART 1 – GENERAL

1.01 SUMMARY

A. Section Includes

1. Provide and test process valves, strainers, operators and appurtenances as shown on the Drawings and as specified herein. The valves, strainers, and appurtenances shall be of sizes and connection types as shown on the Drawings as well as that specified herein. The following sections reference the process valve type and specification reference numbers shown in the valve tag symbols on the Contract Drawings. Valves without valve tag symbols are specified elsewhere. **The equipment included in this specification section may or may not all be required for the work of the Contract.** Provide all valves that are specified, indicated on the Drawings and/or are required to complete the work outlined in the Contract Documents.

1.02 PRICE AND PAYMENT PROCEDURES

A. Measurement and payment requirements: per Division 01 General Requirements.

1.03 REFERENCES

A. The publications listed below form a part of this specification to the extent referenced. The publications are referred to within the text by the basic designation only. Unless otherwise noted, the most recent version of the listed publications, including revisions, at time of bid opening shall apply.

B. AMERICAN NATIONAL STANDARDS INSTITUTE (ANSI)

1. ANSI B16.1 (1998) Cast Iron Pipe Flanges and Flanged Fittings Classes 25, 125, and 250 Ref Title

C. ASTM INTERNATIONAL (ASTM)

1. ASTM A 126 (2004) Standard Specification for Gray Iron Castings for Valves, Flanges, and Pipe Fittings

2. ASTM A 216/A 216M (2008) Standard Specification for Steel Castings, Carbon, Suitable for Fusion Welding, for High-Temperature Service

3. ASTM A 240/A 240M (2009) Standard Specification for Chromium and Chromium-Nickel Stainless Steel Plate, Sheet, and Strip for Pressure Vessels and for General Applications

4. ASTM A 276 (2008a) Standard Specification for Stainless Steel Bars and Shapes

5. ASTM A 351/A 351M (2006) Standard Specification for Castings, Austenitic, Austenitic-Ferritic (Duplex), for Pressure-Containing Parts

6. ASTM A 436 (1984; R 2006) Standard Specification for Austenitic Gray Iron Castings

7. ASTM A 48/A 48M (2003; R 2008) Standard Specification for Gray Iron Castings

8. ASTM A 536 (1984e1; R 2004) Standard Specification for Ductile Iron Castings

9. ASTM B 584 (2008a) Standard Specification for Copper Alloy Sand Castings for General Applications

10. ASTM B 124/B 124M (2009) Standard Specification for Copper and Copper Alloy Forging Rod, Bar, and Shapes

11. ASTM B 150/B 150M (2008) Standard Specification for Aluminum Bronze Rod, Bar, and Shapes

12. ASTM B 505/B 505M (2008a) Standard Specification for Copper-Base Alloy Continuous Castings

13. ASTM D 2000 (2008) Standard Classification System for Rubber Products in Automotive Applications

14. ASTM D 3222 (2005) Unmodified Poly(Vinylidene Fluoride) (PVDF) Molding Extrusion and Coating Materials

15. ASTM D 4024 (2005) Machine Made "Fiberglass" (Glass-Fiber-Reinforced Thermosetting Resin) Flanges

16. ASTM D 429 (2002) Standard Test Methods for Rubber Property-Adhesion to Rigid Substrates

17. ASTM B 61 (2008) Standard Specification for Steam or Valve Bronze Castings

18. ASTM B 62 (2002) Standard Specification for Composition Bronze or Ounce Metal Castings

19. ASTM D 1784 (1999a) Rigid Poly(Vinyl Chloride) (PVC) Compounds and Chlorinated Poly(Vinyl Chloride) (CPVC) Compounds

20. ASTM F 593 (2002) Standard Specification for Stainless Steel Bolts, Hex Cap Screws, and Studs

21. ASTM F 594 (2002) Standard Specification for Stainless Steel Nuts

D. ASME INTERNATIONAL (ASME)

1. ASME B16.5 (1996 A1998) Pipe Flanges and Flanged Fittings NPS 1/2 Through NPS 24 Addenda A - 10/26/1998

E. AMERICAN WATER WORKS ASSOCIATION (AWWA)

1. AWWA C550 (2005; Errata 2005) Protective Epoxy Interior Coatings for Valves and Hydrants

2. AWWA D102 (2006) Coating Steel Water-Storage Tanks

3. AWWA C504 (2006) Standard for Rubber-Seated Butterfly Valves

4. AWWA C540-02 (2003) Power-Actuating Devices for Valves and Slide Gates

5. AWWA C508 (2001) Swing-Check Valves for Waterworks Service, 2 In. (50 mm) Through 24 In. (600 mm) NPS

6. AWWA C509 (2001) Resilient-Seated Gate Valves for Water Supply Service

7. AWWA C 540 (1993) Power Actuating Devices for Valves and Sluice Gates

F. NATIONAL ELECTRICAL MANUFACTURERS ASSOCIATION (NEMA)

1. NEMA ICS 6 (1993) Industrial Control and Systems Enclosures

2. NEMA MG 1 (2007; Errata 2008) Standard for Motors and Generators

G. THE SOCIETY FOR PROTECTIVE COATINGS (SSPC)

1. SSPC SP 10 (2007) Near-White Blast Cleaning

1.04 ADMINISTRATIVE REQUIREMENTS

A. Coordination, Sequencing, and Scheduling: per Division 01 General Requirements.

1.05 SUBMITTALS

A. Submit in accordance with Division 01 General Requirements.

B. Product Data

1. Submit data including details of construction, extent of shop assembly of the valves/strainers and a detailed description of installation procedures. The Manufacturer shall submit standard drawings or catalog cuts. The type, thickness, application procedure, and test for coatings, and non-metallic and metallic linings shall also be included.

2. The actuator and valve Manufacturers shall submit data including details of construction, extent of shop assembly of the units and a detailed description of the installation procedures. The Manufacturers shall submit standard Drawings or catalog cuts of the assembled valve and actuator. Specifically indicate any required clearance dimensions for maintenance and operation.

3. The type, thickness, application procedure, and test for coatings, and non-metallic and metallic linings shall also be included. Provide wiring and control diagrams for the electric actuators. Specifically include all "dry contacts" provided as well as the Electrical Hazard Area Classification of the units.

4. The Manufacturer shall also provide "written documentation" of all control set points which include but are not limited to all hard wired interlock switch set points for the valve actuators to protect them from damage and to ensure proper equipment operation and function.

C. Shop Drawings

1. Shop drawings shall include descriptive literature, bulletins and/or catalog cuts of all equipment as well as a complete bill of materials. Include the weights of all components. The Drawings shall specifically outline all required clearances for maintenance and manual operation. Shop drawings shall show layout and dimensions of equipment, major components, key alignment locations and locations of bolt holes. Drawings shall also indicate where access points for maintenance and operations are located on the equipment. Drawings shall show all critical field dimensions identified by the Manufacturer and obtained by the Contractor. Provide complete data on the electric operator, and provide actuator wiring diagrams showing all switches, disconnects, wires, contacts, lights, buttons, terminals, devices, etc. Include a description of the operating features of the actuator, connections to remote and field mounted equipment and logic diagrams.

D. Reports

1. The Manufacturer shall submit performance test reports in booklet form showing all field tests performed to adjust each component and all field tests performed to prove compliance with the specified performance criteria, upon completion and testing of the installed system.

E. Manufacturer's Field Reports

1. Field reports shall include all requirements of Division 01 General Requirements including but not limited to written certification of proper installation, initial

adjustments and satisfactory operations, dated and signed by a Manufacturer's representative.

F. Operation and Maintenance Data Submittals

1. Submit operation and maintenance data for each valve and strainer in accordance with Division 01 General Requirements. In addition the manual shall include but is not limited to the following:

a. Complete information on operation, installation, lubrication, adjustment, safety precautions, routine and special maintenance disassembly, repair, reassembly, and trouble diagnostics of each valve or strainer. The manuals shall contain attached copies of the factory and field test reports as well as a description of the unit and its component parts.

b. Operation and Maintenance Data shall include all required cuts, drawings, equipment lists, descriptions, etc., which are required to instruct operation and maintenance personnel unfamiliar with such equipment.

1.06 QUALITY ASSURANCE

A. Provide in accordance with Division 01 General Requirements.

B. Qualifications of Manufacturer

1. Materials and equipment shall be the standard products of a Manufacturer regularly engaged in the production of such products and shall essentially duplicate items that have been in satisfactory use in identical applications in other water treatment facilities. The Manufacturer shall have a minimum of five (5) years of documented experience in the design and production of process valves or strainers of "all types", and not less than five (5) years of experience in the production of equal or larger sized units of the exact equipment models/designs as specified herein.

2. The Manufacturer shall provide a list of at least ten (10) similar installations, including contact names and phone numbers. Equipment shall be supported by a service organization that is, in the opinion of the Engineer, reasonably convenient to the site to ensure parts and service can be acquired in a timely fashion.

C. All valves of the same type shall be from one (1) Manufacturer. If required or shown on the Drawings; floor stands, associated adapters, extension stems, extension stem brackets, and all associated appurtenances shall be provided by the Manufacturer of the valve being served whenever possible.

D. The valve and actuator shall be assembled at the factory by the Actuator Manufacturer. All mounting hardware used for attaching the actuator to the valve shall be designed according to the top-works dimensions for the specific valve type to be supplied by the chosen valve Manufacturer. The valve/actuator combination shall be shipped from the

Actuator Manufacturer pre-assembled. Field mounting of the actuator to the valve shall not be acceptable under any circumstances.

E. The pressure ratings and materials specified represent minimum acceptable standards for valves and strainers. All valves and strainers shall be suitable for the services specified and intended. All valves and strainers shall have a pressure rating no less than that required for the system in which they are installed.

1.07 DELIVERY, STORAGE & HANDLING

A. Provide in accordance with Division 01 General Requirements.

B. Surfaces such as female threads, internal mechanical joint ends or flange faces shall be protected from damage during shipment. The Contractor shall inspect all products and materials delivered to the site for damage. All valves and strainers shall be stored with a minimum of handling. Store all materials on site in enclosures or under protective coverings. Store rubber gaskets under cover out of direct sunlight. Do not store materials directly on the ground. Keep the inside of valves, strainers, and fittings free of dirt and debris.

C. Materials delivered and placed in storage shall be stored with protection from the weather, excessive humidity variation, excessive temperature variation, dirt, dust and/or other contaminants. Proper protection and care of materials before, during and after installation shall be the Contractor's responsibility. Any materials found to be damaged shall be replaced at the Contractor's expense. Materials shall be stored with protection from puncture, dirt, grease, moisture, mechanical abrasions, excessive heat, and ultraviolet (UV) radiation. All valves and strainers shall be handled and stored in accordance with the Manufacturer's recommendations. Plastic valves shall be packed, packaged and marked in accordance with ASTM D 3892 standards.

1.08 SITE CONDITIONS

A. Existing Conditions: per Division 01 General Requirements.

1.09 MAINTENANCE

A. Existing Conditions: per Division 01 General Requirements.

1.10 WARRANTY

A. The Manufacturer shall provide a full and comprehensive warranty for all valves and actuated valve assemblies as well as all related equipment specified in this section. The equipment shall be warrantied to be free from defects in workmanship, design, and materials for a period of not less than one (1) year. If any parts of the equipment supplied under this section should fail during the Manufacturer's warranty period, replacement of parts or the valve/strainer itself shall be provided. The equipment shall be restored to active working service at no expense to the Owner. The Manufacturer shall incur all costs including but not limited to parts, labor, service, technicians,

shipping, and handling required for restoration of equipment to active service as required under the Manufacturer's warranty.

B. The Manufacturer's warranty shall commence at the date of substantial completion or partial utilization.

1.11 FIELD MEASUREMENTS

A. The Contractor shall become familiar with all details of the work, verify all dimensions in the field, and shall advise the Engineer of any discrepancy before performing the work. The Contractor shall coordinate with the equipment supplier to determine and collect required field dimensions to ensure equipment, valves, strainers, hand wheels, chain wheels, extension stems, and all related appurtenances are properly manufactured and located in field.

1.12 SPECIAL TOOLS

A. Provide one set of all special tools required to completely assemble, disassemble, or maintain the equipment. Special tools shall refer to oversized or specially dimensioned tools, special attachments or fixtures, or any similar items required for maintenance and/or operation of the specified equipment.

PART 2 – PRODUCTS

2.01 PROCESS VALVES - GENERAL

A. The following sections reference the process valve types shown on the Drawings. The Contractor shall be responsible for providing all valves that are indicated on the Drawings or referred to in the Specifications. The use of a Manufacturer's and/or identification catalog number shall be for the purpose of establishing a standard of quality and/or the valve configuration/assembly desired for the application specified or shown on the Drawings. The reference to specific product catalog, model, or figure numbers shall not be considered as "Proprietary".

B. Valve sizes shall be equal to line sizes as shown on the Drawings, unless otherwise indicated. The Contractor shall provide all necessary reducers and/or expansion fittings for connection of valves to pipelines that are not of equal size. All flanged valves shall conform to ANSI B16.1 standards unless otherwise noted.

C. Valves and strainers shall include all required operator(s), actuator(s), handwheel(s), chain wheel(s), extension stem(s), floor stand(s), floor box(es) worm and gear operator(s), operating nut(s), chain(s), wrenches, and all other appurtenances required for a properly installed and operational valve assembly as shown on the Drawings and as specified herein. The installation shall form a complete workable system as shown on the Drawings.

D. Cast marking(s) shall be provided on all valves and strainers. The marking(s) shall include size, working pressure, a cast arrow to indicate direction of flow, name of

Manufacturer, and year of Manufacture. The marking shall be located on an appropriate part of the valve in a clearly visible location. All valves and strainers shall be suitable for the intended service shown on the Drawings and specified herein. Renewable parts shall not be of a lower quality than those specified and provided with the initially specified and installed valve or strainer assembly.

E. **All valves shall open by turning/rotating the valve actuator Clockwise ("Right"), unless otherwise specified or shown on the Drawings.** The Contractor shall provide all special adaptors to ensure compatibility between valves, appurtenances, and adjacent piping.

2.06 METALLIC SWING CHECK VALVE

A. All metallic swing type check valves shall meet the requirements of AWWA C508 standards. When the valve is "Open" the disc shall swing clear of the waterway. When there is no flow in the line the disc shall hang against its seat in a vertical position. The check valve shall be specifically designed for use in wastewater applications.

B. All check valves shall be rated at 175 psig water working pressure and be subjected to a 350 psi hydrostatic test for structural soundness prior to shipment. Seat tightness at rated pressure for all valves shall be in accordance with values shown in AWWA C500 standards for gate valves and conform fully to AWWA C508 standards. The swing check valves shall also be designed and constructed in accordance with the following criteria:

1. Size: 2 Inches to 24 Inches - Match to Piping Size as Shown on Drawings
2. End Connections: Flanged-ANSI 125#
3. Body & Cover: Cast Iron, per ASTM A 126 , Class B, Epoxy Coated
4. Weight: Cast Iron, per ASTM A 126 , Class B, Epoxy Coated
5. Disc & Disc Arm: Ductile Iron, per ASTM A 536, GR 65-45-12
6. Seat Rings & Body Seat: Bronze, per ASTM B 505/B 505M
7. Hinge Shaft Bushings & Disc Nut: Bronze, per ASTM B 505/B 505M
8. Hinge Shaft, Hinge Pins, Shaft End Plate, Follower Ring: 316 Stainless Steel, per ASTM F 593
9. Cover Bolts, Screws, Nuts, Washers: 316 Stainless Steel, per ASTM F 593
10. Gland Packing: Graphite and Kevlar
11. Disc Seat Ring: Nitrile (Buna-N/NBR)

C. **Only where specified or specifically indicated on the Drawings**, final closure of the valve shall be dampened by means of a single, side-mounted oil-cushion assembly directly mounted to the valve body on machined pads. All other valves shall be provided with a standard lever and weight configuration. The amount of cushioning shall be adjustable. The oil cushion assembly shall be designed and constructed in accordance with the following criteria.

1. Control Check Valve: Brass ASTM B 124/B 124M, GR377
2. Oil Reservoir: PVC

3. Plunger: Bronze, per ASTM B 505/B 505M
4. Linkages & Pins: 316 Stainless Steel, per ASTM F 593
5. Air Check Valve and Tubing: Brass, per ASTM B 36/B 36M

D. The hydraulic cylinder and system shall be mounted on the external side of the valve. The system shall cushion the valve as the oil travels from the cylinder to the oil reservoir. The system shall be totally enclosed and separate from the line media. Contamination of the hydraulic system or obstruction of line flow shall be prevented via the side-mounted system. The discharge head from the pump will allow the valve to open raising the outside lever and weight. The disc will then swing freely to the open position. Upon pump shut down, the outside weight will assist the disc to close until the roller on the tear drop comes in contact with the pad on the hydraulic cylinder, thus cushioning the closing of the valve. The cushioning action shall occur as the oil flows through the system. Closure control shall be manually adjustable in the field. The hydraulic hose shall be rated for a minimum of 3,000 psig.

E. The valve shall be suitable for horizontal or vertical installation. Check valves shall be constructed to permit top entry for complete removal of internal components without removing the valve from the line. The valve body shall have a clear waterway with full open area equal to the pipe size. The valve shall have field replaceable seats. The valve disc shall be faced with a renewable resilient seat ring, held in place by a follower ring and screws. The disc arm shall be keyed to a shaft supported at each end by bushings. The shaft shall rotate without the need for external lubrication. The shaft shall be sealed where it passes through the body by means of a stuffing box and adjustable packing.

F. The valve shall swing open smoothly at pump start and close quickly and quietly upon pump shutdown to prevent flow reversal. When closed, the valve shall seat drip tight. The valve shall be supplied with an outside lever and adjustable counterweight to initiate valve closure. All ferrous metallic components of the valve shall be cleaned and provided with a factory applied rust inhibitive primer.

G. **The valve lever shall be installed to the "horizontal" in the closed position for both horizontal and vertical piping installations.**

H. All metallic swing check valves of the same type, style, and duty shall be supplied by a single Manufacturer. All manufacturers, named or otherwise, shall comply with the Contract Documents. All metallic swing check valves shall be a product of the following Manufacturer:

1. GA Industries LLC
2. Apco Valve & Primer Company
3. Henry Pratt Company
4. Engineer Approved Equal

2.02 GATE VALVE (RESILIENT SEATED)

A. All "Resilient Seated" gate valves shall be manufactured in accordance with AWWA C509, AWWA C550, and AWWA C515 standards. The gate shall be fully encapsulated with molded rubber, minimum 1/8 inch thick. The bond shall meet tests for rubber to metal bond in accordance with ASTM D 429 standards.

B. All interior exposed gate valves shall be Non-Rising Stem (NRS) type except for where outside screw and yoke (OS&Y) service is specified or shown on the Drawings. NRS valves shall be used as specified and as shown on the Drawings where limited space is a controlling criteria. All valves larger than 12 inches shall be equipped with gear actuators. The actuator gear box shall be of the totally enclosed oil or grease lubricated type. The gear box shall be suitable for operation at any angle and be provided with the appropriate filling and drain plugs.

C. The valve operator shall be a 2 inch square nut when a shaft extension, floor box, valve box, or floor stand is required or shown on the Drawings. All gate valves 14 inch and larger mounted horizontally shall be equipped with rollers, tracks, and scrapers.

D. All valves shall have 3/4 inch NPT pipe plugs in each side of the bonnet. Gate valves shall also be equipped with clean out ports on each side of the gate. Stem nuts shall be attached to the gate without the use of pins. The case and bonnet shall be sealed by O-rings. The valves shall be equipped with a sealed packing box, and sized to allow replacement of the packing without draining the pipeline or removal of the actuator. All gate valves shall be designed constructed in accordance with the following:

1. Size: 2 inch through 48 inch - Match to Piping Size as Shown on Drawings
2. End Connections: Flanged & Drilled Per ASME B16.5 Class 125/150
3. Operator: Handwheel - Cast Iron per ASTM A 126 Class B
4. Body & Bonnet: Cast Iron per ASTM A 126 Class B
5. Stuffing Box & Gate: Cast Iron per ASTM A 126 Class B
6. Stem: Manganese Bronze per ASTM B 138/B 138M
7. Gate Rings, Case Rings, Stem Nuts, Wedge Nuts, Wedges, Disc Pin, Spreader, Guides, Rollers, Tracks: Bronze per ASTM B 505/B 505M
8. Body Bolts, Cover Bolts, Set Screws, Pins, Nuts, Washers: Type 316 Stainless Steel per ASTM F 593
9. Body Bolts, Cover Bolts, Set Screws, Pins, Nuts, Washers: Type 316 Stainless Steel per ASTM F 593

E. Gate valves up to 12 inch shall be rated at 200 psi water working pressure and be given a 400 psi hydrostatic test for structural soundness. Gate valves larger than 12 inches shall be rated at 150 psi water working pressure and shall be given a 300 psi hydrostatic test for structural soundness. Seat tightness at rated pressure shall be in accordance with values shown in the AWWA C509 standards for gate valves.

F. All gate valves of the same type, style, and duty shall be supplied by a single Manufacturer. All resilient seated gate valves shall be a product of the following Manufacturer:

1. Clow Valve Company
2. Mueller Company
3. Kennedy Valve Company
4. M&H Valve Company
5. Engineer Approved Equal

2.03 WATER SERVICE AIR RELEASE VALVE

A. All air release valves shall be "Short Body Type" specifically designed for use with water service. All air release valve(s) shall be designed to operate (open) while pressurized, allowing entrained air to escape through the air release orifice. After entrained air escapes through the air release orifice, the valve orifice shall then be closed by a needle mounted on a compound lever mechanism. The design shall not allow media to escape. The air release orifice shall then remain closed until more air accumulates and the opening cycle repeats automatically.

B. All air release valves shall be manufactured and tested in accordance with American Water Works Association (AWWA) Standard C 512. The exterior primer of the valve shall be in accordance with section 09 90 00 "PAINTS & COATINGS". The valve float shall be unconditionally guaranteed against failure including pressure surges. All air release valves shall be designed and constructed in accordance with the following criteria:

1. Body & Cover: Cast Iron per ASTM A 126 Gr. B (Epoxy Coated)
2. Internal Linkage: 316 Stainless Steel per ASTM A 240/A 240M
3. Float: 316 Stainless Steel per ASTM A 240/A 240M
4. Needle/Orifice Button: Buna-N (Nitrile/NBR)
5. Valve Inlet: 2 inch NPT
6. Valve Outlet: 1/2 inch NPT
7. Orifice Opening: 5/16 inch for (0- 50 psi) 1/4 inch for (51-150 psi)

C. The Contractor shall pipe the valve to drain as shown on the Drawings or as directed by the Engineer.

D. All Water Service Air Release valves of the same type, style, and duty shall be supplied by a single Manufacturer. All Manufacturers, named or otherwise, shall comply completely with the Contract Documents. The water service air release valves shall be a product of the following Manufacturer:

1. GA Industries, LLC

2. APCO Valve & Primer Co.

3. Val-Matic Valve & Manufacturing Co.

4. Engineer Approved Equal

2.04 WATER SERVICE AIR/VACUUM VALVE

A. The air/vacuum valves on pump discharge shall be of the "Kinetic" design capable of exhausting air from the pump column at up to sonic velocity without blowing shut during pump start. The valve shall automatically close when water fills the valve and remain closed while the system is pressurized but open automatically to admit air to the pump column upon pump shutdown.

B. All air/vacuum valves shall be manufactured and tested in accordance with American Water Works Association (AWWA) Standard C 512.

C. The valve shall be of the size shown on the plans and/or in the valve schedule with a venting orifice no smaller than the nominal valve size. Valves 3" and smaller shall have NPT inlet and 4" and larger shall have flanged inlet. A throttle device shall be installed in the outlet to permit regulated air discharge but unrestricted air inlet. Additional plugged NPT connections shall be provided near the top and bottom for testing and draining.

D. ANSI Class 125 flanged valves shall have a minimum 150 PSI pressure rating and NPT or ANSI Class 250 flanged valves shall have a minimum 300 PSI pressure rating.

E. The exterior primer of the valve shall be in accordance with section 09 90 00 "PAINTS & COATINGS". The valve float shall be unconditionally guaranteed against failure including pressure surges. All air/vacuum valves shall be designed and constructed in accordance with the following criteria:

1. Body & Cover shall be cast iron per ASTM A126 Class B (Epoxy Coated), cover shall be bolted to the body and all internal components shall be replaceable through the cover.

2. Float ball shall be spherical, Type 316 Stainless Steel per ASTM A240/A240M, non-metallic float balls are not acceptable.

3. Seat shall be replaceable, made of Buna-N rubber, or other suitable elastomer compounds.

4. Surge check shall have a flanged cast iron body and bronze trim with the same pressure rating as the air valve and be factory assembled to the air & vacuum valve and tested as a unit.

F. All Water Service Air/Vacuum valves of the same type, style, and duty shall be supplied by a single Manufacturer. All Manufacturers, named or otherwise, shall comply completely with the Contract Documents. The water service air/vacuum valves shall be a product of the following Manufacturer:

1. GA Industries, LLC
2. APCO Valve & Primer Co.
3. Val-Matic Valve & Manufacturing Co.
4. Engineer Approved Equal

2.05 BURIED GATE VALVE (RESILIENT SEATED)

A. All "Buried Resilient Seated Gate Valves" shall be of resilient wedge gate valve design, meeting or exceeding all requirements of the latest revision of AWWA C509 standards. The valve shall be in accordance with that previously specified for GATE VALVES (RESILIENT SEATED) as well as that specified herein. The valves shall be specifically designed for buried service. The wedge shall consist of a ductile iron casting encased in a bonded-in-place nitrile elastomer covering which shall form the resilient sealing surfaces. All "buried" valves shall be non-rising stem design with sealing accomplished by double o-rings. The valve wedge encapsulation material shall be Nitrile (NBR/Buna-N). All gate valves shall be designed and constructed in accordance with the following criteria:

1. Size: 2 inch through 48 inch - Match to Piping Size as Shown on Drawings
2. End Connection: Mechanical Joint - With AWWA Bituminous Coating System
3. End Connection: Valves 2 Inches & Smaller - Threaded NPT
4. Operator: 2 Inch Square Operating Nut - Securely Fastened to Shaft

B. Provide a sufficient length T-Handle valve extension stem wrenches for operating valves of various depths. All buried valves shall be provided with a valve box as shown on the Drawings and as specified herein. The valve boxes shall be cast iron, tar coated, sliding type. The valve box shall be adjustable together with a cast iron cover. The bell end of the valve box shall be sufficiently large to fit over the stuffing box of the gate valve.

C. All gate valves of the same type, style, and duty shall be supplied by a single Manufacturer. All buried resilient seated gate valves shall be a product of the following Manufacturer:

1. Clow Valve Company
2. Mueller Company
3. Kennedy Valve Company
4. M&H Valve Company
5. Engineer Approved Equal

2.06 BURIED GATE VALVE (METAL SEATED DOUBLE DISK)

A. All "Buried Metal Seated Double Disc Solid Wedge Gate Valves" shall be manufactured to meet or exceed AWWA C500 standards. The valves shall be double disc, with parallel seats and internal four point wedging. The valves shall be equipped with a positive operating internal device which shall press the disc seats firmly against the body seats when the valve is closed, and shall release the load before the disc starts to move when the valve is being opened. The valve shall be specifically designed for buried service. The valve shall be in accordance with that specified for "Gate Valve (Metal Seated Double Disk)" as well as that specified herein. All "buried" valves shall be non-rising stem design with sealing accomplished by double o-rings. **All "buried gate valves" shall turn right, or clockwise, to open**. All gate valves shall be designed constructed in accordance with the following:

1. Size: 2 inch through 48 inch - Match to Piping Size as Shown on Drawings
2. End Connection: Mechanical Joint - With AWWA Bituminous Coating System
3. End Connection: Valves 2 Inches & Smaller - Threaded NPT
4. Operator: 2 Inch Square Operating Nut - Securely Fastened to Shaft

B. Provide a sufficient length T-Handle valve extension stem wrenches for operating valves of various depths. All buried valves shall be provided with a valve box as shown on the Drawings and as specified herein. The valve boxes shall be cast iron, tar coated, sliding type. The valve box shall be adjustable together with a cast iron cover. The bell end of the valve box shall be sufficiently large to fit over the stuffing box of the gate valve.

C. All gate valves of the same type, style, and duty shall be supplied by a single Manufacturer. All buried metal seated double disk gate valves shall be a product of the following Manufacturer:

1. Clow Valve Company
2. Mueller Company
3. Kennedy Valve Company
4. M&H Valve Company
5. Engineer Approved Equal

2.07 PVC BALL VALVE

A. All thermoplastic ball valves shall be Industrial type manufactured to ASTM F 1970 standards. All PVC ball valves shall be constructed from PVC Type I, per ASTM D 1784 standards, Cell Classification 12454. All O-rings shall be compatible with the pumped fluid as specified and as recommended by the valve Manufacturer. All valves shall have a stem with double O-ring stem seals. All valve handles shall be polypropylene with a built-in lockout mechanism. All valve union nuts shall have Buttress threads. All valve components shall be replaceable without removing the valve from the piping line.

B. For potable water applications, all valves shall be certified by NSF International for use in potable water service. All 1/2 inch through 4 inch valves shall be pressure rated to 235 psi, all 6 inch and 8 inch Venturied and all flanged valves shall be pressure rated to 150 psi for water at 73°F.

C. Provide stem extensions where required and as shown on the Drawings. The stem extension shall be a single, two piece, or single piece panel mount extension of PVC; with outer housing 100% sealed either of free standing or supported design. The valve shall not require any special tools. All PVC ball valves shall be designed in accordance with the following criteria:

1. Size: 1/2 Inch to 8 Inch - Match to Piping Size as Shown on Drawings
2. End Connections: True Union, Flanged
3. Valve Body, Ball, Carrier, End Connector & Stem: PVC
4. Valve Seat: PTFE
5. Gaskets, Seals, & O-Rings: Viton
6. Maximum Line Pressure: 235 psi
7. Valve Operator: Lever

D. The valve materials of construction shall be completely suitable for the intended liquid service. Valves for use on Sodium Hypochlorite systems shall have no metal parts in contact with the fluid. Ball valves used on Sodium Hypochlorite shall be "vented design" to prevent buildup of hazardous off-gas and pressure. All ball valves used for Sodium Hypochlorite service shall be true union type with an energized seat that will concurrently provide automatic adjustment for wear and leak-free service at the lower pressure port. The valve shall be provided with a 1/8 inch vent hole in the ball to equalize internal fluid pressures. Install the valve with ball vent on the pressure (upstream) side when in closed position.

E. All exterior chemical feed valves shall be provided with locking handles as required or as shown on the Drawings. The locking mechanism shall prevent the unauthorized operation of the valve. The valve shall be able to be locked in the open or closed position. Provide keyed locks suitable for each locking valve.

F. All PVC ball valves of the same type, style and duty shall be supplied by a single Manufacturer. All PVC ball valves shall be a product of the following Manufacturer:

1. Asahi/America Inc.
2. Spears Manufacturing Company
3. Hayward Industrial Products Inc.
4. Engineer Approved Equal

2.08 PVC BALL CHECK VALVE

A. All PVC Ball Check Valves shall be of Thermoplastic PVC construction. PVC shall conform to ASTM D 1784 standards, Cell Classification 12454-A. The valves shall be capable of being machined to accept a 316 SS Spring or PTFE Coated 316 SS spring where required. All ball check valves shall be designed and constructed in accordance with the following criteria:

1. Size: 1/2 Inch to 2 Inch - Match to Piping Size as Shown on Drawings
2. End Connection: True Union, Flanged
3. Valve Body: PVC, per ASTM D 1784 Cell Classification 12454-A
4. Valve Ball: PVC, per ASTM D 1784 Cell Classification 12454-A
5. Valve Seat: Viton
6. Seal: Viton
7. Maximum Inlet Pressure (Valves 2 Inches & Smaller): 150 psi
8. Maximum Inlet Pressure (Valves Larger Than 2 Inches: 100 psi

B. All PVC ball check valves of the same type, style, and duty shall be supplied by a single Manufacturer. All PVC ball check valves shall be a product of the following Manufacturer:

1. Asahi/America Inc.
2. Spears Manufacturing Company
3. Hayward Industrial Products Inc.
4. Engineer Approved Equal

2.09 METALLIC BALL CHECK VALVE

A. All metallic ball check valves shall be designed to be non-clog, fully automatic, maintenance free and specifically suited for operation in wastewater and storm water where solids, fibers, grit or highly viscous materials are encountered. Valves shall have one moving part, the ball, which shall automatically roll out of the path of flow, thus providing an unobstructed and "full flow" equal to the nominal connecting pipe size. Upon discontinuation of flow the ball shall automatically roll back to the closed position, thus providing a positive seal against back pressure or back flow.

B. The ball shall have an exterior coating of vulcanized Nitrile (NBR/Buna-N) rubber and shall be resistant to grease, animal and vegetable fats, dilute concentrations of acids and alkalies, tearing and abrasion. Ball check valves shall be designed to be maintenance-free and suited for installation in the horizontal or vertical position. The valve shall be constructed such that by unbolting and lifting off the cover, the ball may be removed and replaced without removing the valve from the line. All ferrous/iron surfaces shall be provided with a two (2) part epoxy coating. The coating shall be applied by the Manufacturer. The valves shall be designed and constructed in accordance with the following criteria:

1. Size: 1/4 Inch to 14 Inch - Match to Piping Size as Shown on Drawings

2. End Connections (3 Inches & Larger): Flanged, per ASME B16.1 ANSI 125/150
3. End Connections (Smaller Than 3 Inches): Threaded, NPT
4. Body: Cast Iron per ASTM A 126, Class B 65-45-12 & ASTM A 48/A 48M
5. Plug: Cast Iron per ASTM A 126, Class B & ASTM A 48/A 48M
6. Ball (Sinking/Floating): Nitrile (NBR/Buna-N) ASTM D 2000
7. Maximum Pressure: 145 psi
8. Maximum Temperature: 176 Degrees F
9. Bolt, Nut, & Washer: 304 Stainless Steel, per ASTM A 276
10. Seat & Bonnet Seal: Nitrile (NBR/Buna-N)
11. Ball Type: Sinking

C. All metallic ball check valves of the same type, style, and duty shall be supplied by a single Manufacturer. All ball check valves shall be a product of the following Manufacturer:

1. Danfoss Flomatic Corporation
2. ITT Flygt Corporation
3. GA Industries, Inc.
4. Engineer Approved Equal

2.10 PVC Y-TYPE STRAINERS

A. All sediment strainers shall be "clear" Y-type constructed from PVC Type I, ASTM D 1784 Cell Classification 12454 or CPVC Type IV, ASTM D 1784 Cell Classification 23447. All Y-strainers shall have replaceable screens. All threaded Y-Strainers shall have Special Reinforced (SR) threads. All Y-Strainers, sizes 1/2 inch - 2 inches shall be pressure rated to 150 psi, sizes 3 inch - 4 inch to 90 psi for water at 73°F. The strainers shall be designed for installation in both the "horizontal" and "vertical". All Y-strainers shall be designed and constructed in accordance with the following criteria:

1. Size: 1/2 Inch to 4 Inch - Match to Piping Size as Shown on Drawings
2. End Connections: True Union Socket (Connections to "Type PVC/1" Piping)
3. End Connections: Flanged (Connections to Metallic Piping)
4. Body: "Clear" PVC ASTM D 1784
5. O-Rings: EPDM
6. Screen: PVC
7. Plug: PVC ASTM D 1784
8. Mesh: 20 Mesh (1/32 inch openings)

B. Provide two (2) additional spare strainer screens for each y-strainer. Provide one (1) spare 40 mesh (1/64 inch opening) screen and one (1) 60 mesh (0.009 inch opening) screen for each strainer.

C. All PVC Y-Strainers of the same type, style, and duty shall be supplied by a single Manufacturer. The PVC Y-Strainers shall be a product of the following Manufacturer:

1. Asahi/America Inc.

2. Spears Manufacturing Company
3. Hayward Industrial Products Inc.
4. Engineer Approved Equal

2.11 METALLIC Y-TYPE STRAINERS

A. All metallic Y-Strainers shall be rated for 150 psi at 400 degree F and 225 psi at 150 degrees F. The strainers shall have machined seat that allows the screen to be self-aligning and assures a perfect fit. All strainers sizes shall be provided with a bolted screen retainer cover and non-asbestos gasket. The screen retainer cover shall be NPT tapped for a blow-off plug that is provided. The strainers shall be designed for installation in both the "horizontal" and "vertical". All metallic Y-Strainers shall be designed and constructed in accordance with the following:

1. Size: 1/4 Inch to 8 Inch - Match to Piping Size as Shown on Drawings
2. End Connections (Less Than 3 Inches):
3. End Connections (3 Inches & Larger): Flanged, ANSI 150
4. Body & Plug: Bronze ASTM B 62, ASTM B 584
5. Screen Cover: Bronze ASTM B 62, ASTM B 584
6. O-Rings/Gaskets: Teflon or PTFE
7. Screen: 304 Stainless Steel
8. Mesh Code: 20

B. Provide two (2) additional spare strainer screens for each y-strainer. Provide one (1) spare 40 mesh (1/64 inch opening) screen and one (1) 60 mesh (0.009 inch opening) screen for each strainer.

C. All Metallic Y-Strainers of the same type, style, and duty shall be supplied by a single Manufacturer. All Metallic Y-Strainers shall be a product of the following Manufacturer:

1. Apollo by Conbraco Industries Inc.
2. Watts Regulator Company
3. Hammond Valve Company
4. Engineer Approved Equal

2.12 SPARE PARTS

A. Concurrent with delivery and installation of the specified valves, spare parts for each different item of material and equipment specified that is recommended by the Manufacturer to be replaced any time up to three (3) years of service shall be provided. For each type and size of valve, the following extra materials shall be provided: lubricator, lubricant (with appropriate temperature rating), lubricator/isolating valve; galvanized operating wrench, 4 feet long, for T-handled operators; galvanized operating key for cross handled valves.

B. Extra materials shall include two (2) of the following spare parts for each type and size of valve: gaskets; O-ring seals; diaphragms (molded); all elastomer parts; stem packing; seat rings and seat ring pulling tool.

2.13 VALVE ACTUATORS & OPERATORS

A. Unless otherwise specified or shown on the Drawings, all valves shall be manually actuated. All valves shall have an operating handwheel or a handle/lever mounted on the operator. Valves with operating nuts shall be non-rising stem design with an AWWA 2 inch square operating nut. Provide at least six (6) two (2) foot long steel operating bars for all operating nuts. All valves shall be provided with handwheel actuators on all manually actuated valves larger than six (6) inches in size unless otherwise specified or shown on the Drawings.

B. The valve Manufacturer shall supply and factory mount all actuators; including any type of manual or powered actuators. The valves and actuators shall be shipped as a single unit. All valve actuators shall be sized to operate the associated valve for the full range of pressures and velocities. Position indicators shall be provided for interior NRS valves.

C. The force in a manual operator shall not exceed 40 pounds of rim-pull under any operating condition, including initial breakaway. The operator shall be equipped with gear reduction when force exceeds 40 pounds of rim-pull. All manual operators shall be self-locking type or shall be equipped with a self-locking device. The actuators shall be capable of moving the valves from a fully open to a fully closed position and a fully closed position to a fully open position. The actuator shall be capable of holding the valve at any position in between the fully open and fully closed positions. A position indicator shall be supplied on quarter-turn valves. Each operating device shall have the word "OPEN" permanently cast as well as an arrow indicating the direction of operation.

2.14 ELECTRIC VALVE ACTUATORS

A. The actuators shall be suitable for use on all 3 phase and single phase 60 Hz power for modulating service and open and closed service (DC voltages also available) and must include motor, integral reversing starters, local controls and terminals for remote control and indication housed within a self-contained, sealed enclosure. Set-up of the actuator shall be carried out without the removal of any covers (non-intrusive). Actuator calibration shall be by integral pushbuttons and selector switch. No separate special commissioning tools shall be required. In addition, provision shall be made for the protection of configured actuator settings by means of a password. Bluetooth communication by means of a PDA or laptop computer is standard on all Aumatic controls. Communication software is free and available at the Auma website.

B. Actuators shall be furnished with a local indicator, which continuously shows the valve travel from the fully open to the fully closed positions. The indicator shall be

mechanically driven and must indicate the valve position during the electric and manual modes of operation.

C. Actuators in modulating or regulating service will be selected such that the required dynamic valve torque is no more than 60% of the electric actuator's maximum rated breakaway torque. Power gearing in modulating or regulating actuators shall have zero backlash between the motor and actuator output.

D. Size: The actuator shall be sized to guarantee valve closure at the specified torque and/or thrust requirement as indicated by the valve manufacturer or supplier. The actuator must be adequately sized to provide the torque required to operate the valve at 90% of the nominal voltage. Quarterturn actuators will be furnished with mechanical stops that restrict the valve/actuator travel.

E. Environmental: Actuators shall be suitable for indoor and outdoor use. The actuator shall be capable of functioning in an ambient temperature ranging from -20°F to +140°F, up to 100% relative humidity.

F. Enclosure: Actuators shall be O-ring sealed, watertight to NEMA 4X/6 (6 feet for 30 minutes). When required, actuators for hazardous locations shall be certified explosion proof for Class I, Division 1 & 2, Groups C & D. Enclosure must allow for temporary site storage without the need for electrical supply connection. Gear case shall be cast iron.

G. Motor: The electric motor shall be Class F insulated, with a duty rating of at least 15 minutes at 104°F (40°C). Motor shall be specifically designed and built by the actuator manufacturer for electric actuator service. Commercially available motors shall not be acceptable. Electrical disconnection of the motor shall be by means of a plug and socket and motor removal shall be possible without loss of lubricant. The actuator must include a device to ensure that the motor runs with the correct rotation for the required direction of valve travel regardless of the connection sequence of the power supply.

H. The following criteria shall be provided for motor protection:

1. The motor shall be de-energized without damage in the event of a stall condition when attempting to move a jammed valve.
2. The motor shall be de-energized in the event of an over torque condition
3. A minimum of three thermal devices imbedded in the motor windings shall be provided to de-energize the motor in case of overheating.
4. Lost phase protection

I. Gearing: The actuator gearing shall be totally enclosed in a grease-filled cast iron gear case suitable for operation in any orientation. Actuator gearing shall be hardened steel with alloy bronze worm wheel. The design should permit the opening of the gear case for inspection or disassembly without releasing the stem thrust or taking the valve out of service. Where required per application, electric actuators will

be provided with worm gearboxes. The worm gearboxes shall be supplied with full 360° bronze worm wheels and end-of-travel mechanical stops on the worm shaft. Designs with segmented worm wheels and end-of-travel stops in the gearbox housing will not be permitted.

J. Manual operation: Manual operation shall be by Handwheel. Manual operation shall utilize the actuator worm shaft/worm wheel to maintain self-locking gearing and to facilitate changeover from motor to manual operation when the actuator is under load. Actuator designs that bypass electric actuator worm gears when declutched are unacceptable. The declutching from motor operation shall be at the motor shaft to minimize declutching effort. Designs that break the valve load at the worm and worm gear are unacceptable. Return from manual to electric mode of operation will be automatic upon motor operation. A seized or inoperable motor shall not prevent manual operation.

K. Drive nut and thrust base assembly: For multi turn rising stem applications, the drive nut shall be installed in a detachable thrust base. The design shall allow actuator removal from the thrust base, leaving the thrust base attached to the valve to retain valve position. Thrust bearings shall be lubricated by means of an easily accessible grease fitting.

L. Valve position and torque calibration: Position and torque shall be sensed by absolute encoder using hall effect sensors. Incremental encoders requiring batteries to retain settings upon loss of power shall not be accepted. Position and torque settings will be stored in permanent non-volatile memory. Torque switch bypass to be provided for the torque sensing system to inhibit torque switch trip during unseating or during starting in mid-travel against high inertia loads. Torque and travel adjustment parameters are to be as follows:

    1. Position setting range 1 to 500 or 10 to 5,000 turns, with resolution of 2.81 degrees and accuracy to 5.0 degrees of actuator output.

    2. Torque setting: 40% to 100% of rated torque.

M. Digital Controls: All actuators will be furnished with integral motor controls consisting of; reversing starters, power supply/control transformer, phase discriminator, digital interface with the control system, "open-stop-close" pushbuttons / "local-off-remote" selector switch / 5 programmable indicating LED's. Integral controls to be field separable from actuator gear case by means of plug and socket electrical connection. Integral pilot device station must be capable of repositioning at 90 degree increments so the pushbuttons, indicating lights and selector switch are accessible to the operator.The actuator digital communications board must be capable of providing the following:

    1. Control features

        a. OPEN

        b. CLOSE

c. Run to set point position

2. Indications (typical)

a. End-of-travel positions (OPEN / CLOSED)

b. Continuous valve position

c. Selector switch in position (LOCAL / REMOTE)

d. Open torque switch tripped

e. Closed torque switch tripped

3. Fault indications (typical)

a. Motor protection tripped

b. Loss of phase / Wrong phase sequence

c. Open torque switch tripped in mid-travel (available)

d. Closed torque switch tripped in mid-travel (available)

4. Minimum 2 analog inputs

5. Minimum 6 digital inputs

6. Minimum 6 digital outputs

7. Valve position output

N. Communication parameters:

1. Proprietary protocols will not be permitted

2. Actuators must be capable of coming back on-line without operator intervention when power is lost and then recovered

O. Electronic board removal and/or failure shall not prevent the actuator from operating electrically with the "local-off-remote" selector switch in the "local" position.

P. Worm Gear Boxes

1. Worm gearbox shall be specifically designed for butterfly or ball valves and damper operation and shall meet the typical torque / running time requirements (types of duty) for valves and electric actuators.

2. Worm gearbox shall be designed to be operated either manually or electrically in combination with multi turn actuators. For the multi turn actuators, please refer to the corresponding specification.

3. Generally, it shall be possible to motorize a manually operated valve at a later stage without replacing the complete gearbox.

4. Worm gearbox shall be available for output torques up to 250,000Nm.
5. The gearbox shall be a worm wheel type.
6. Gearboxes with segment / quadrant type of worm wheel shall not be allowed.
7. Spindle or scotch - yoke type of gearbox shall not be allowed.

Q. Design

1. The gearbox shall be self-locking.
2. The gearbox shall have a 360 degree worm wheel and worm shaft, including adjustable mechanical end stop arrangement.
3. For motor operation in modulating duty, the worm wheel shall generally be made out of bronze.
4. If required, worm gearbox shall be equipped with a primary planetary gearbox to reduce the input torque.
5. The gearbox housing shall be made out of cast iron (GG). Aluminum housing material (torque carrying parts) is not acceptable.
6. The gearbox housing shall be grease filled, to guarantee adequate lubrication in any mounting position and long life time.
7. Special self-lubricating bearings shall be provided to accept radial forces on the worm shaft.
8. A thrust bearing shall carry the resultant axial load.
9. For motor operation the electric actuator supplier shall be consulted regarding torque verification. Preferably the electric actuator and the gearbox shall be manufactured by the same supplier.

R. Valve Position Indication

1. An adjustable mechanical pointer to show the valve position shall be available.
2. Gearboxes for buried service shall have a protection lid instead of the pointer.

S. Enclosure

1. Enclosure shall be at least IP 68, according to EN 60 529.
2. Worm gearbox shall be sealed by radial seals or O-rings.

T. End Stop Principle

1. The adjustable mechanical end stop shall be as travelling nut design to protect the gearbox housing / valve stem from excessive force. The design shall guarantee a defined stop when end of travel (valve closed) is

reached. The end stop shall be equipped with safety wedge disks to guarantee a mechanical stop block principle.

2. The end stop design shall accept the input torques as axial forces within the worm shaft, the load not being transmitted to the gearbox output / valve stem.

3. Travel limitation with stop screws (end stop screws as used for segment or quadrant type) placed in the gearbox housing shall not be allowed, as protection against over -torque cannot be guaranteed.

4. The mechanical end stop shall be easily adjustable at site commissioning and maintenance works, to guarantee proper seating of the valve during operation. Swing angle shall be set at OEM

U. Manufacturer: Actuators shall be Model Number SA (R)/GS with AUMATIC Controls as manufactured by AUMA Actuators, Inc.

2.15 PNEUMATIC VALVE ACTUATORS

A. Actuator Design: Pneumatic actuators are to be of the vane type design with only one (1) moving part. Actuators shall have male output shafts on both sides of actuator to drive valve and control accessories. Actuator shall have a vane position indicator milled into the output shaft. One side of the actuator shall be manufactured to ISO/NAMUR mounting standards for attachment of accessories (limit switches, indicators, positioners). Seals shall be double opposed lip seals with stainless steel expanders. Seal backing plates shall be steel. O-ring seals on vane will not be acceptable.

B. Actuator Materials of Construction:

1. Housing: Pressure die cast A413 or A356 aluminum casting with all surfaces coated with thermosetting hybrid polyester/epoxy powder coat with Ultraviolet Inhibitor. Zinc housing will not be permitted. Actuator housing to include industry-standard NAMUR accessory mount interfaces as an integral part of the housing. The NAMUR VDI/VDE 3845 to be included on top of the actuators and on the solenoid manifold to allow for the easy installation of standard actuator control accessories.

a. For highly corrosive installations and where specified in the Valve Actuator Schedule, the actuator manufacturer shall provide a Fluoropolymer final finish on both the actuator interior and exterior and on the complete vane and output shafts. Exterior-only coating will not be acceptable and manufacturer must have at least 5 years of successful installation history with the Fluoropolymer finish.

b. The Fluoropolymer coating shall have documented testing to chemical resistance to salt spray, ammonium hydroxide, hydrochloric acid, calcium

hypochloride, sodium hypochloride, ferric chloride, among other chemicals for a period of six (6) months with no deterioration.

c. Vane actuator case halves will have Fluoropolymer coating prior to assembly. The case halves shall be Fluoropolymer coated on all surfaces including all tapped holes, untapped holes, flat face flange, and any other opening or ports.

d. Actuator vane shall be electro less nickel-plated finish prior to application of the Fluoropolymer coating on vane.

e. All threaded fittings shall have a locking and sealing compound designed for metal tapered threads and fittings. The sealing compound shall be applied at time of assembly of actuator, and when field installed bolting hardware is installed.

f. All actuators shall be tested after assembly. Actuators shall not require more than three (3) psig to be cycled a complete stroke in each direction before they are connected to the valve. Test report documenting zero (0) cross vane leakage shall be submitted prior to shipment.

2. Vane / Output Shaft: Steel ASTM A148 per AWWA C540-2, Grade 115-95, heat treated with electro less nickel plated finish. Ductile Iron vane / output shafts will not be acceptable.

3. Vane Seals: HBNR highly-saturated Buna Nitrile, rated -5 to +300 degrees F., no exception.

4. Shaft Seals: Buna N.

5. Vane Seal Expanders: Stainless spring steel.

6. Side Plates: Steel with all surfaces coated with thermosetting epoxy powder coat. Nylon or plastic side plates will not be acceptable.

7. Hardware: All fasteners and travel stops stainless steel to US ANSI standard. Metric bolting will not be acceptable.

C. Actuator Position-Control Capability:

1. Open/Close Valves: Actuators shall be solenoid operated. Solenoids for smaller size actuators shall be standard ISO/NAMUR VDI/VDE 3845 direct mounted with the option to be remote mounting for increased accessibility. Solenoid coils shall be 120 VAC / 60 Hz, NEMA 4 rated. Speed control devices shall allow independent adjustment of OPEN and CLOSE cycling speed. Each solenoid valve to include detented pushbutton manual override to lock-and-hold valve in either the OPEN or CLOSE position in the event of a power outage. Exhaust air mufflers shall be standard. Provide 80 to 150 PSI clean, dry air to solenoid valve. Solenoid valves shall be as manufactured by K-TORK 'SIDEWINDER' Series.

2. Each Open/Close actuator shall include valve position feedback limit switches for remote OPEN and CLOSE indication. Two SPDT switches shall be housed in a NEMA 4/4X aluminum enclosure with polycarbonate lid and include a 3D Dome-style visual valve position indicator that can be seen from above and from the side. Green=Open and Red=Close. The switch box output shaft and fasteners to be stainless steel and shall mount to the actuator per NAMUR VDI/VDE 3845 with a stainless steel bracket. The two electromechanical switch contacts shall be rated 5A@250 VAC, 0.5A@24 VDC, resistive/inductive. Limit switches shall be adjustable by press, turn and release motion requiring the use of no tools. The limit switch assembly to be UL and CUL Listed and approved and shall be manufactured by K-TORK 'INFORMER' Series.

3. The solenoid coil must be pre-wired to spare terminals labeled 'Solenoid Valve' inside the limit switch enclosure and all field connections for both the limit switches and solenoid valves shall be terminated inside the limit switch box.

4. Modulating Valves: The actuator shall be designed to control the valve in all positions from fully open to fully closed, and from fully closed to fully open with control in any intermediate position corresponding to the variable controls system input. Positioner shall consume a MAXIMUM of .003 SCFM while in the resting state. Positioners consuming greater than .003 SCFM will not be acceptable. Modulating actuators shall be supplied with intelligent SMART diagnostics that include pneumatic leakage, wear/tear of valve seat, trend diagrams, valve stroke counter, direction change counter, operating hours counter, temperature measurement, valve position over time, Partial Stroke Test, control deviations and other alarms as selected by the user. Positioners shall have ISO/NAMUR VDI/VDE 3845 standard output shaft to allow direct mounting to actuator without need for adaptors. The positioner will receive a 4-20 mA positioning signal from the control system for precision positioning control of the effluent valve in all positions from closed to open. The positioner shall have auto-stroke / auto-calibration capability as standard for easy commissioning. LCD 0-100% visual indication of valve position will be located in the positioner cover. Where specified in the Valve Actuator Schedule, provide optically-isolated analog 4-20 mA position transmitter, (2) mechanical limit switches or both, mounted inside the positioner housing. Positioner construction shall be of Makrolon glass fiber reinforced polycarbonate, with NEMA 4X rating. Fasteners to be stainless steel. Provide 80 psi clean dry supply air to the positioner. Positioner shall be supplied by the actuator manufacturer and shall be intended for use with the actuator provided for modulating application. Positioner shall be as manufactured by K-TORK #S-800.

5. Mechanical Manual Override: Where specified in the Valve Actuator Schedule, actuator shall include a mechanical manual override de-clutch gearbox and hand wheel. The manual override shall be able move and hold the valve in any position between full OPEN and full CLOSE. The manual override shall be capable of remaining on the valve and fully operational with the actuator removed and include two mechanical valve position stops. The manual override shall have a cast

iron hosing and stainless steel input shaft and fasteners, rated for IP68 / NEMA 4/4X environments. Hand wheel diameter to be selected to limit rim pull to a maximum of 80#. Include 3-way actuator vent valve(s) as required to bleed the actuator and isolate the supply air during manual operation. The 3-way vent valve(s) shall include "Auto" and "Manual" legend plate and the hand wheel shall include OPEN and CLOSE designations and directional arrows. The de-clutch manual override shall be manufactured by the actuator supplier without exception.

D. Accessories such as limit switches, positioners, solenoid valves, speed controls, piping and tubing, as required by the specification, shall be mounted and tested by the actuator manufacturer to the actuators prior to shipment to the jobsite.

E. Torque Capability: The rated torque capability of each actuator shall be sufficient to seat, unseat, and rigidly hold, in any intermediate position, the valve disc it controls under the operating conditions specified herein. Torque safety factors shall conform to AWWA Standards and in no case be less than 1.25 times the valve manufactures specified torques based on operating conditions.

F. Safety Factor: Actuator housings, supports, and connections to the valve shall be designed with a minimum safety factor of 5, based on the ultimate strength, or a minimum safety factor of 3, based on the yield strength of materials used.

G. Stop-Limiting Devices: Valve actuators shall be equipped with adjustable mechanical stop-limiting devices to prevent over-travel of the valve disc in the open and closed positions. Position stops shall provide, at minimum, 80 to 100 degrees of adjustable travel.

H. The pneumatic actuators shall have a working pressure of 150 psig per AWWA C540-2 standards with an overload pressure of 220 psig. Actuators with a published 100 psig maximum operating pressure rated will not be acceptable.

I. Actuators shall be equipped with adjustable flow-control devices controlling the operating air exhausting from the actuator. The devices shall be located at or near the actuator or on the solenoid valve. The opening and closing speeds shall be nominally set for a range of 30 to 90 seconds, variable with valve sizes. Final adjustments shall be made by the purchaser to minimize line surges during normal operation.

J. Actuators shall not require more than three (3) psig to be cycled a complete stroke in each direction before they are connected to the valve.

K. Bracket and Couplings:

1. Custom fabricated bracket to adapt the actuator to the new or existing (retrofit) valves shall be heavy wall rectangular carbon steel tube and shall retain the valve stem packing or provide for use of the original draw-down packing gland as required.

2. All brackets and couplings shall have part numbers stamped into each part.

3. All brackets and couplings shall have electro statically applied fusion bonded nylon powder coated finish.

4. Couplings shall have a flat machined on the coupling for visual indication of valve disk position.

5. Couplings shall be made of bar stock carbon steel with keyway and stainless steel setscrew.

L. Acceptable Manufacturers: K-TORK Actuators & Controls, a Rotork company, 10410 Vista Park Road, Dallas, Texas 75238 Telephone number (214) 343-9980 or Engineer Pre-Approved equal

M. Operator Air Tubing: Air tubing on valve operators shall be rubber or stainless steel. Air tubing shall be sized according to actuator size. As a minimum 1/4-inch on smaller actuators, 3/8-inch on larger actuators.

2.16 CHAINWHEEL OPERATORS

A. Unless otherwise specified or shown on the Drawings, chainwheel actuators shall be provided for all valves when the valve center line is located **six (6) feet** or greater above the operating floor. All chainwheel actuators shall be provided complete with chain guides. The operator chain shall loop within a minimum of **four (4) feet** from the operating floor level. Where chains hang in normally traveled areas, 316 stainless steel "L" type tie-back anchors shall be provided to allow for chain attachment. All chain shall be weldless single loop lock type.

B. All chainwheel actuators and chain guides shall be specifically sized for the diameter of the valve handwheel. All chainwheel actuators shall be designed to allow for field adjustment and detachment. All chainwheel actuators shall be designed and constructed in accordance with the following criteria:

1. Size: Match to Valve Handwheel Diameter
2. Chainwheel: Cast Iron or Ductile Iron - Epoxy Coated
3. Chain Guide: Malleable Iron
4. Attachment Hardware: 316 Stainless Steel
5. Chain: 316 Stainless Steel
6. Chain: Spark-Resistant Brass (Explosion Proof Environments Only)

C. The chainwheel rim shall contain a groove into which the chain guide attaches. The groove shall be an integral part of the casting. All ferrous metallic surfaces of the chainwheel actuators shall be provided with a two part epoxy paint coating. The coating color system shall be matched to the valve piping system color coding. All chainwheel actuators which are located in Class 1, Division 1 & 2 "Explosion Proof" electrical hazard areas shall be equipped with a spark-resistant brass chain.

D. All chainwheel actuators of the same type, style, and duty shall be supplied by a single Manufacturer. Where applicable, chainwheel actuators shall be provided by the

Manufacturer of the valve being served. The chain wheel actuators shall be a product of the following Manufacturer:

1. M&H Valve Company
2. Kennedy Valve Company
3. Babbitt Steam Specialty Company
4. Engineer Approved Equal

2.17 GEAR OPERATORS

A. Unless otherwise specified or shown on the Drawings, all valves larger than eight (8) inches shall be provided with gear operators. All manually operated valves with a rim pull greater than 40 ft-lbs shall also be provided with gear operators. Worm and gear operators shall be a one-piece design with worm-gears of bronze or machine cut steel material. Worm shall be hardened alloy steel with the thread ground and polished. Traveling nut type operators shall have threaded steel reach rods with an internally threaded bronze or ductile iron nut.

B. The output shaft shall be perpendicular to the valve shaft and be provided with a removable handwheel. Unless otherwise noted or specified all gear actuators shall conform to AWWA C504 standards. All butterfly valve actuators shall provide proof of certification. All gear actuators shall be removable from the valve without removing the valve from the line or dismantling the valve.

C. All gear operators shall indicate the valve position and have adjustable stops. The maximum handwheel size shall be 24 inches in diameter. All position indicators shall be of the embossed, stamped, engraved, etched, or raised types.

D. Unless otherwise specified or shown on the Drawings, all gear operated valves three (3) inches & larger shall be provided with position indication at the point of operation. Valves smaller than three (3) inches shall have position indication on the respective handwheel's or lever actuators.

2.18 UNDERGROUND OPERATORS

A. Buried service operators on valves larger than 2.5 inches shall have a 2 inch operating nut. Buried operators on valves 2 inches and smaller shall have a cross handle for operation by a forked key. The moving parts of valves and operators shall be enclosed in a housing to prevent contact with the soil. Buried service operators for quarter-turn valves shall be designed to withstand an input torque of 450 foot-pounds at the fully open or fully closed positions, and shall be grease packed and gasketed to withstand a submersion in water to 10.2 psig. Buried valves shall be provided with extension stems, bonnets, and valve boxes.

2.19 EXTENSION STEMS & STEM GUIDES

A. Where the depth of the valve is such that its centerline is more than six (6) inches below grade or operator level, an operator extension stem shall be furnished with a two (2)

inch operating nut to bring the operating nut to a point six (6) inches below the surface of the ground and/or box cover. The operating nut shall be located in a floor box.

B. Extension stems shall be two (2) inch 304L stainless steel. Provide support brackets for spans greater than five (5) feet. All extension stems and/or operating nuts shall be provided with universal joints and pin couplings when longer than ten (10) feet. All stem adaptors shall be provided as required. All extension stems and operating nuts shall have a rating of at least five (5) times the maximum operating torque.

C. All stem guides shall be high strength stainless steel. The stem guides shall be adjustable wall bracket type. The guide shall be provided with bronze bushings where the extension stem passes through. The maximum spacing shall be ten (10) feet. All stem guides shall be designed and constructed in accordance with the following:

1. Bracket: 304L Stainless Steel
2. Guide: 304L Stainless Steel
3. Bushing: Brass CDA 360
4. Bolts & Nuts: 316 Stainless Steel ASTM A 276
5. Operator: 2 inch square nut or Handwheel as shown on Drawings

D. All stem guides & extension stems of the same type, style, and duty shall be supplied by a single Manufacturer. Where applicable, stem guides and extension stems shall be provided by the Manufacturer of the valve being served. The stem guides and extension stems shall be a product of the following Manufacturer:

1. Clow Valve Company
2. Troy Valve Company
3. M&H Valve Company
4. Kennedy Valve Company
5. Engineer Approved Equal

2.20 VALVE BOXES (OUTDOOR SUB-GRADE VALVES)

A. Each exterior valve shall be provided with a valve box. Valve boxes shall be cast iron, adjustable, telescoping, heavy-pattern type. They shall be designed and constructed to prevent the direct transmission of traffic loads to the pipe or valve.

B. Cast-iron valve boxes shall have minimum metal thickness of 3/16 inch. All boxes shall be extension type with slide-type adjustment and a flared base. The bell end of the valve box shall be sufficiently large enough to fit over the stuffing box of the respective valve.

C. The boxes shall be adjustable through at least six (6) inches vertically without reduction of lap between sections to less than four (4) inches. The length shall be as necessary to suit the finish grade elevation.

D. The inside diameter of the box shall be at least 5-1/4 inches. The covers shall be close fitting and dirt-tight. The top of the cover shall be flush with the top of the box rim.

E. A minimum of two (2) T-handles for two (2) inch square operating nuts shall be provided. The T-handle wrenches shall be sized for the box length. Concrete boxes shall be the standard product of a Manufacturer of precast concrete structures.

F. The box length shall adapt to the length required for the depth of the line and to the depth of cover required over the pipe at the valve location without full extension. Concrete boxes shall be installed only in locations not subjected to vehicular traffic. The boxes shall have housings of sufficient size to completely cover the valve or service stop and shall be complete with covers.

G. All iron valve boxes of the same type, style, and duty shall be supplied by a single Manufacturer. The iron valve boxes shall be a product of the following Manufacturer:

1. Crescent Foundry Company
2. East Jordan Iron Works Inc.
3. Engineer Approved Equal

2.21 FLOOR STANDS

A. Provide rising or non-rising stem (NRS) floor stands as required and as shown on the Drawings. The stands shall be provided with a factory applied rust-inhibiting prime coating as per section 09 90 00 "PAINTS AND COATINGS". Provide adapters as recommended by the Manufacturer. The floor stand shall be indicating type; complete with stem, coupling, hand wheel, stem guide brackets, and yoke attachment. The stem guide shall be spaced such that stem L/R ratio does not exceed 200. Anchors shall be supplied as required by the floor stand Manufacturer.

B. The floor stand assembly shall be provided with an etched or cast arrow to show the direction of rotation to open the valve. A resilient moisture-resistant seal shall be provided around the stem penetration through the slab. Provide cantilevered floor stand supports as required or as shown on the Drawings. Provide hand wheel extension stems as required or as shown on the Drawings.

C. Where the operator for a quarter-turn valve is located on a floor stand, an extension stem torque tube shall be provided and properly sized for the maximum torque capacity of the valve. All floor stands shall be designed and constructed in accordance with the following:

1. Type: Non-Rising Stem - Indicator Type
2. Stand: Cast Iron ASTM A 126 Class B 65-45-12
3. Stem: 304 Stainless Steel ASTM A 276
4. Bushing & Indicator Nut: Bronze
5. Drive Screw: Stainless Steel ASTM A 276
6. Bolts, Nuts, & Anchors: 316 Stainless Steel ASTM A 276
7. Operator: Handwheel or Hand Crank as Shown on Drawings
8. Closed Tag: Aluminum
9. Extension Stem (If Required): 304L Stainless Steel ASTM A 276

D. All floor stands of the same type, style, and duty shall be supplied by a single Manufacturer. Where applicable, floor stands shall be provided by the Manufacturer of the valve being served. The floor stands shall be a product of the following Manufacturer:

1. Clow Valve Company
2. Troy Valve Company
3. M&H Valve Company
4. Kennedy Valve Company
5. Engineer Approved Equal

2.22 FINISHINGS & COATINGS

A. All coatings and lubricants in contact with "Potable Water" shall be certified as acceptable for use with that fluid. If the valve Manufacturer does not require finished coating on any interior surfaces, then the Manufacturer shall state so in writing and no finish coating shall be required, if approved by the Engineer.

B. Unless otherwise specified, all iron body valves shall be exterior primed with a shop coat of an Engineer approved rust-inhibitive primer. The primer shall be applied in accordance with the instructions of the paint Manufacturer. The primer shall be compatible with the finish coat provided. Unless otherwise specified, the finish coat shall match the coating of connecting pipe in type and color. All field painting shall be in accordance with section 09 90 00 Paints & Coatings. Stainless steel, brass, bronze, and plastic body valves shall not require coating.

C. Unless otherwise specified or noted, all interior ferrous surfaces shall be given a shop finish of an asphalt varnish or epoxy coating in accordance with AWWA C550 and AWWA C509 standards.

D. The epoxy paint shall be either a two-part liquid material or a heat-activated (fusion) material except that only a heat-activated material shall apply if a valve coating is specified as "fusion" or "fusion bonded" epoxy. The epoxy lining and coating shall have a minimum of 4.0 mils dry film thickness except where it is limited by valve operating tolerances. Safety isolation valves and lockout valves with handles, handwheels, or chain wheels shall be painted "Safety Yellow."

E. Ferrous surfaces obviously not intended to be painted shall be given a shop coat of grease or other acceptable rust-inhibitive coating.

2.23 FLOOR BOXES

A. Provide floor boxes for valve operating nuts recessed in the concrete as specified and as shown on the Drawings. The valve floor boxes shall be standard cast iron type, cast-in-place with a fastening top. The floor boxes shall be designed for use with non-rising stem valves (NRS). The floor boxes shall be designed to provide support for

the extension stem and a cover for the operating nut on the stem. The floor boxes shall be designed and constructed in accordance with the following criteria:

1. Body: Cast Iron ASTM A 126 Class B
2. Cover: Cast Iron ASTM A 126 Class B
3. Bushing: Brass CDA 360
4. Length: As required and as shown on Drawings

B. All floor boxes of the same type, style, and duty shall be supplied by a single Manufacturer. Where applicable, floor boxes shall be provided by the Manufacturer of the valve being served. The floor boxes shall be a product of the following Manufacturer:

1. Clow Valve Company
2. Troy Valve Company
3. M&H Valve Company
4. Kennedy Valve Company
5. Engineer Approved Equal

2.24 VALVE IDENTIFICATION TAGS

A. All valves in piping including individual valves provided with equipment shall be tagged in accordance with the Drawings. The valve tags shall be provided with identifying numbers and letters to match the designations shown on the Drawings. All valve tags shall be provided with sufficient lengths of chain for attachment to the respective valve. All valve tags shall be designed and constructed in accordance with the following:

1. Tag Size: 2 Inch Square
2. Tag Material: Stainless Steel
3. Chain: #16 Stainless Steel Jack Chain
4. Lettering: Engraved

B. All buried valves shall be provided with tags embedded in a concrete pad surrounding the valve box.

C. The Contractor shall confirm the final numbering sequence with the Engineer prior to ordering any tags.

D. All valve tags of the same type, style, and duty shall be supplied by a single Manufacturer. All valve tags shall be a product of the following Manufacturer:

1. Seton Identification Products Inc.
2. Emedco Inc.
3. Engineer Approved Equal

PART 3 – EXECUTION

3.01 INSTALLATION

A. Install valves as shown on the Drawings and in strict accordance with the Manufacturer's recommendations. Install valves with stems pointed up, in vertical position where possible, but in no case with stems pointed downward of the horizontal plane. Allow sufficient room for maintenance, removal and proper operation. All valves shall be located and oriented to permit easy access to the valve operator, and to avoid interferences.

B. All valves shall be independently supported. Valves shall not be supported by the connecting piping.

C. Flanged valve bolt holes shall be installed to straddle the vertical centerline of the pipe. Flanged faces shall be cleaned prior to inserting the gasket and bolts. All nuts shall be tightened progressively and uniformly. Threaded ends shall have the threads cleaned by wire brushing or swabbing prior to installation.

D. Where any valve or appurtenance installation is covered by a standard, the Contractor shall install such equipment in accordance with the standard unless otherwise specified or indicated on the Drawings. The Contractor shall certify any such installations are in accordance with all applicable standards.

E. Unless otherwise specified or shown on the Drawings, all valve connections/joints shall be installed in accordance with the specified and applicable standards. The Contractor shall be responsible for all verification of Manufacturer's torque requirements.

3.02 VALVE ORIENTATION

A. The operating stem of a manual valve shall be installed in a vertical position when the valve is installed in horizontal runs of pipe having centerline elevations of **4.5 feet** or less above the finished floor, unless otherwise specified or indicated on the Drawings. The operating stem of a manual valve shall be installed in a horizontal position in horizontal runs of pipe having centerline elevations greater than 4.5 feet above the finish floor, unless otherwise specified or indicated on the Drawings.

B. All manually actuated valves three (3) inches and smaller shall have the valve indicators and operators located to display toward the normal operational locations.

3.03 BUTTERFLY VALVES

A. Orientation of butterfly valves shall take into account changes in pipe direction. Valve shafts shall be oriented so that unbalanced flows caused by pipe direction changes or other disturbances are equally divided to each half of the disc.

3.04 VALVE TESTING

A. Test all valves visually for leaks and proper operation under pressure. Test valves to ensure proper valve function and actuation. All valves shall be tested as part of the respective piping system or segment in accordance with Section 40 05 13 Process Pipe and Fittings.

B. Valves may either be tested while testing pipelines, or as a separate test. It shall be demonstrated that valves open and close smoothly with operating pressure on one side and atmospheric pressure on the other, and in both directions for two-way valve applications. Count and record the number of turns required to open and close each valve, and account for any discrepancies with the Manufacturer's data.

C. Air and vacuum relief valves shall be examined as the associated pipe is being filled to verify venting and seating is fully functional. Set, verify, and record set pressures for all relief and regulating valves. Self-contained automatic valves shall be tested at both maximum and minimum operating ranges, and reset upon completion of test to the design value.

D. Take care not to overpressure any valve and appurtenances during testing.

3.05 RETESTING

A. If the equipment does not successfully pass the tests listed above, the Manufacturer/Contractor shall repair the equipment and perform the tests again until passing the tests successfully. If any deficiencies are revealed during any test, such deficiencies shall be corrected and the tests shall be reconducted at no additional cost to the Owner or Engineer.

3.06 CLEANING

A. All items, including but not limited to all valves & valve interiors, shall be thoroughly cleaned prior to installation, testing, and final acceptance. All dirt, debris, and other foreign materials shall be removed.

3.07 TESTING OF BACKFLOW PREVENTERS

A. Provide certified testing of each backflow prevention assembly. Each assembly shall be tested using gauges and equipment specifically designed for the testing of backflow prevention assemblies. Each assembly shall be tested by an independent backflow prevention assembly testing agency.

B. Each backflow prevention assembly shall be tested for accuracy and proper functionality in accordance with the requirements of State or local regulatory agencies. If there is no State or local regulatory agency requirements, each assembly shall be tested for accuracy and proper functionality in accordance with the requirements of University of Southern California's Foundation of Cross Connection Control and Hydraulic Research or the American Water Works Association Manual of Cross

Connection (Manual M-14), or any other approved testing laboratory having equivalent capabilities for both laboratory and field evaluation of backflow prevention assemblies. Provide a test report and form for each assembly. The test report shall include but is not limited to as a minimum; the following:

1. Data on Device
2. Type of Assembly
3. Manufacturer
4. Model #
5. Serial Number
6. Size
7. Location
8. Test Pressure Readings

C. The test report shall also include data on the testing firm. The data shall include but is not limited to the following:

1. Name
2. Address
3. Certified Tester
4. Certified Tester Number
5. Date of Test
6. Serial Number and Test Data

D. If units fail to meet the test standard requirements, each unit shall be repaired and retested to correct working order at no additional cost to the Owner or Engineer. Provide retesting of each unit following repairs.

END OF SECTION

SECTION 40 05 59

SLIDE GATES & WEIR GATES

PART 1 – GENERAL

1.01 SUMMARY

A. Section Includes

1. Furnish, install, test, and make ready for operation all weir gates, guides, operators, accessories and appurtenances as shown on the Drawings and as specified herein. Provide all related appurtenances, including but not limited to attachments, foundations, anchors, grouting, support brackets, hardware and all related accessories to provide complete operational gate systems as specified herein and as shown on the Contract Drawings. All appurtenances, accessory equipment, and auxiliaries for complete gate systems shall be provided.

1.02 PRICE AND PAYMENT PROCEDURES

A. Measurement and payment requirements: per Division 01 General Requirements.

1.03 REFERENCES

A. The publications listed below form a part of this specification to the extent referenced. The publications are referred to within the text by the basic designation only. Unless otherwise noted, the most recent version of the listed publications, including revisions, at time of bid opening shall apply.

B. AMERICAN WATER WORKS ASSOCIATION (AWWA)

1. AWWA C 513 (1997) Open-Channel, Fabricated-Metal Slide Gates

2. AWWA C 540 (1993) Power Actuating Devices for Valves and Sluice Gates

C. ASTM INTERNATIONAL (ASTM)

1. ASTM A 240/A 240M (2009c) Standard Specification for Chromium and Chromium-Nickel Stainless Steel Plate, Sheet, and Strip for Pressure Vessels and for General Applications

2. ASTM A 276 (2008a) Standard Specification for Stainless Steel Bars and Shapes

3. ASTM D 4020 (2005) Ultra-High-Molecular-Weight Polyethylene Molding and Extrusion Materials

4. ASTM F 593 (2002; R 2008) Stainless Steel Bolts, Hex Cap Screws, and Studs

5. ASTM F 594 (2008) Standard Specification for Stainless Steel Nuts

1.04 ADMINISTRATIVE REQUIREMENTS

A. Coordination, Sequencing, and Scheduling: per Division 01 General Requirements.

1.05 SUBMITTALS

A. Submit in accordance with Division 01 General Requirements.

B. PRODUCT DATA

1. Provide sufficient product data to verify compliance with the specifications and to illustrate the construction and assembly of the products. Include compliance of materials and components with applicable CEAM, ASTM, AGMA and other standards as specified. List the manufacture, model and weights of major components. Include catalog cuts, illustrations, schedules, diagrams, performance charts, instructions and brochures illustrating size, physical appearance and other characteristics of materials, systems or equipment. Provide a detailed description of all materials used, including physical properties and methods of manufacturing/construction.

2. Include a complete list of equipment and materials, including manufacturer's descriptive data and technical literature, catalog cuts, installation instructions, and parts schedules. Provide spare parts data for each different item of material and equipment specified. Include a complete list of parts and supplies.

C. SHOP DRAWINGS

1. Drawings shall include detailed assembly instructions, principal dimensions, materials, and any other details required to demonstrate that the system has been coordinated and will properly function as a unit. Drawings shall show proposed layout and anchorage of equipment, appurtenances, and equipment relationships to other parts of the work including clearances for maintenance and operation.

D. OPERATION AND MAINTENANCE DATA

1. Submit operation and maintenance data in accordance with Division 01 General Requirements.

2. Operation and Maintenance Data shall also include all required cuts, drawings, equipment lists, descriptions, etc., which are required to instruct operation and maintenance personnel unfamiliar with such equipment.

1.06 QUALITY ASSURANCE

A. Provide in accordance with Division 01 General Requirements.

B. Qualifications of Manufacturer

1. Materials and equipment shall be the standard products of a Manufacturer regularly engaged in the production of such products and shall essentially duplicate items that have been in satisfactory use in identical applications in other wastewater treatment facilities. The Manufacturer shall have a minimum of five (5) years of documented experience design/production of equal or larger sized designs/models of slide gates and weir gates as indicated in the Contract Documents.

2. The Manufacturer shall provide an installation list of at least twenty (20) similar installations, including contact names and phone numbers. All components shall be supported by a service organization that is, in the opinion of the Engineer, reasonably convenient to the site to ensure parts and service can be acquired in a timely fashion.

1.07 DELIVERY, STORAGE AND HANDLING

A. Provide in accordance with Division 01 General Requirements and manufacturer instructions.

1.08 SITE CONDITIONS

A. Existing Conditions: per Division 01 General Requirements.

1.09 WARRANTY

A. Provide in accordance with Division 01 General Requirements.

1.10 SPECIAL TOOLS

A. Furnish one (1) set of all special tools required to completely assemble, disassemble, or maintain the equipment. Special tools shall refer to oversized or specially dimensioned tools, special attachments or fixtures, or any similar items. One (1) set of special tools shall be provided for each size of equipment or related system.

PART 2 – PRODUCTS

2.01 GENERAL

A. All slide gates, weir gates and auxiliary components shall be designed to safely withstand the head and operating conditions of the installation as shown on the Drawings and/or as specified herein. Slide gates and weir gates shall be used to isolate channels, tanks, and vessels as shown on the Drawings. All slide gates and weir gates shall provide a seal system that meets the minimum requirements specified herein.

B. All components of aluminum slide gates and weir gates shall be in accordance with AWWA C 513 standards. All components of stainless steel slide gates and weir gates shall fabricated in accordance with AWWA C 561 standards. When specifically specified or indicated on the Drawings aluminum components shall be entirely anodized in conformance with the AA C22-A41 standards. All aluminum gates shall be provided with a nickel acetate or nickel fluoride sealer. Specific materials of construction and finishes for each gate are indicated on the Drawings.

C. All slide gates and weir gates shall be of the "Conventional" (Non Self-Contained) or "Self-Contained" frame type with rising or non-rising stems as specified and as indicated on the Drawings. All slide gates shall be fabricated of 6061-T6 aluminum or 304L stainless steel. All gates shall be designed to have adequate strength to prevent distortion in handling and placing and under any condition of service.

D. All materials and equipment shall be as specified and as shown on the Drawings. Materials and equipment shall be new and unused, except for testing as required. Where two or more pieces of equipment performing the same function are required, they shall be duplicate products of the same Manufacturer. Under no circumstances, under the specified range of operation, shall the slide gates be subjected to factors including but not limited to: excessive strain and excessive deflection.

2.02 UNIT DESCRIPTIONS

A. Provide the following slide gates and weir gates as part of the Work as indicated in the Contract Documents. Refer to the Drawings for additional details and requirements for each slide gate and weir gate.

2.03 PROCESS DESIGN CONDITIONS

A. All slide gates and weir gates shall be designed and constructed in accordance with the criteria specified herein and indicated on the Drawings. Refer to the gate details/schedules on the Drawings for additional details and specific design criteria for each gate. All slide gates and weir gates shall be sized to accommodate the dimensions and design head conditions indicated in the Contract Documents.

2.04 GATE FRAMES

A. Gate frames and retainers shall be manufactured of 6061-T6 high-strength extruded aluminum or ASTM A 240/A 240M 304L stainless steel. The frame shall be sufficiently proportioned so that where the guide extends above the operating floor to support the hoisting yoke no further reinforcing of the frame shall be required. Aluminum extrusions shall weigh a minimum of 3 lbs/ft for embedded and channel mounted guide frames.

B. Aluminum extrusions for face mounted slide gates shall weigh a minimum of 4 lbs/ft. Surfaces of aluminum in contact with concrete shall be coated as indicated on the Drawings. The arrangement of the yoke shall be such that the disc and stem can be removed without disconnecting the yoke.

C. Alternatively, the invert of the frame shall be an angle or extrusion completely welded to the ends of the guides. The invert shall form a seating surface for the resilient seat mounted on the disc or invert member. A specially molded resilient seal shall be mounted on the bottom of embedded unit discs to provide flush bottom closure. The shape of the seal shall produce a seating surface having a minimum width of 3/4 inches and the seal shall extend into the secondary slot of the guide.

D. The vertical face of the seal shall be in contact with the seating surface of the guide to provide a proper seal at the corners. Frames embedded in the concrete forming the channel walls and invert shall have keyways to hold the frames in the concrete. All gates with side frames and inverts bolted to the face of a wall shall have holes drilled 18 inches (minimum) apart in the frame for anchor bolts. All portions of the frame bolted to a wall shall have a one (1) inch minimum non-shrink grout pad between the frame and the concrete.

E. "J" or "P" type hollow bulb neoprene seals or ASTM D 4020 UHMW polyethylene seals shall be provided on the guides of all slide gates if necessary to comply with the specified leakage requirements of this specification section. Seals shall be easily removable to allow for replacement and adjustment.

F. Aperture or end of channel gates shall utilize flat frame style side mounting with a flush bottom. The bottom frame shall be installed completely flush with the bottom of the installed structure and shall not create any lip or threshold on the floor. Provide a one (1) inch grout surface for the sides and a recess size as recommended by the gate Manufacturer for embedment of the invert member.

G. All stainless steel frame assemblies, including the guide members, invert member and yoke members shall be constructed of formed stainless steel plate with a minimum thickness of 1/4-inch. The frame design shall allow for embedded mounting, mounting directly to a wall with stainless steel anchor bolts and grout or mounting to a wall thimble with stainless steel mounting studs and a mastic gasket material. Mounting style shall be as shown on the Drawings.

H. All wall mounted or wall thimble mounted gates shall have a flange frame. The structural portion of the frame that incorporates the seat/seals shall be formed into a one-piece shape for rigidity.

I. Gussets shall be provided as necessary to support the guide members in an unseating head condition. The gussets shall extend to support the outer portion of the guide assembly and shall be positioned to ensure that the load is transferred to the anchor bolts or the wall thimble studs. The frame shall extend to accommodate the entire height of the slide when the slide is in the fully opened position on upward opening gates or downward opening weir gates.

J. On self-contained gates, a yoke shall be provided across the top of the frame. The yoke shall be formed by two structural members affixed to the top of the side frame members to provide a one-piece rigid assembly. The yoke shall be designed to allow removal of

the slide. A rigid stainless steel invert member shall be provided across the bottom of the opening. The invert member shall be of the flush bottom type on upward opening gates. A rigid stainless steel top seal member shall be provided across the top of the opening on gates designed to cover submerged openings. A rigid stainless steel member shall be provided across the invert of the opening on downward opening weir gates.

2.05 GUIDES

A. Guides in the gate frame shall be single or dual slot design. The primary slot shall accept the plate of the disc and the second slot shall be sufficiently wide so that the reinforcing ribs of the disc shall extend into it. Guides shall be supplied with (UHMW) polyethylene bearing strips on both the upstream and downstream sides of the disc to reduce friction along the guide surfaces. Guides shall be designed to mount on the face of, embedded in concrete, or to mount into an existing channel as specified or as shown on the Drawings.

2.06 DISC

A. The disc (sliding member) shall be aluminum plate or 304L stainless steel, of the same composition as the frame, reinforced with U-shaped or angle-shaped aluminum or stainless steel extrusions. Reinforcement shall be spaced not more than 16 inches apart and shall be welded to the plate. The disc shall be designed so that it will not deflect more than L/360 of the span or 1/16 inch, whichever is smaller under the design head conditions as specified or shown on the Drawings. Reinforcing ribs shall extend into the guides so that they overlap the seating surface of the guide. All parts and structural components of the disc assembly shall have a minimum thickness of 1/4 inch.

B. For stainless steel gates, the slide and reinforcing stiffeners shall be constructed of ASTM A 240/A 240M 304L stainless steel plate. When the width of the gate opening multiplied by the maximum design head is 80 square feet or greater, the portion of the slide that engages the guide members shall be a "thick edge" design. The thick edge portion of the slide shall have a minimum thickness of three (3) inches. Reinforcing stiffeners shall be welded to the slide and mounted horizontally. Vertical stiffeners shall be welded on the outside of the horizontal stiffeners for additional reinforcement. The stem connector shall be constructed of two angles or plates. The stem connector shall be welded to the slide. A minimum of two stainless steel bolts shall connect the stem to the stem connector.

2.07 OPERATING STEM

A. All gate operating stems shall be constructed of ASTM A 276 304 stainless steel. Operating stems shall have a minimum threaded outside diameter of 1-1/2 inches. The stem shall be constructed of solid stainless steel bar for the entire length, the metal having a tensile strength of not less than 90,000 psi for stems that are three (3) inches or less in diameter. Stems that are in excess of three (3) inches in diameter shall have a tensile strength of 85,000 psi. Stems of more than one section shall be joined by stainless steel or bronze couplings. The coupling shall be bolted to the stems.

B. The threaded portion of the stem shall be provided with a 16 micro-finish or better. In compression, the stem shall be designed for a critical buckling load caused by a 40 lb effort on the crank or hand wheel with a safety factor of two (2) using the Euler column formula. The stem shall be designed to withstand the tension load caused by the application of a 40 lb effort on the crank or hand wheel without exceeding 1/5 of the ultimate tensile strength of the stem material. Stems shall have a slenderness ratio (L/R) of less than 200.

C. Rising stems shall be connected to the disc by means of a cast aluminum stem connection or two (2) angle sections, which are threaded and bolted to the stem and welded to the disc. Non-rising stems shall have a bronze nut. The stems shall have adjustable bronze stop collars above and below the lift nut to prevent over-opening or over-closing of the gate.

D. All rising stems shall be provided with fracture-resistant clear plastic or polycarbonate stem covers complete with mylar indicator markings (indicator strips) to indicate gate position. Stem covers shall not discolor or become opaque for a minimum of five (5) years after installation. The top of the stem cover shall be closed. The bottom end of the stem cover shall be furnished with a housing or adapter plate for easy field mounting.

2.08 SEALS

A. Slide gates and weir gates shall have a flush invert consisting of a specially molded resilient neoprene seal mounted in the invert extrusion. The neoprene seal shall be readily renewable. All seals shall be easily removable to allow for replacement and adjustment. The slide gates and weir gates shall be designed such that under the design seating head, the leakage rate shall not exceed 0.1 gpm/foot of seating perimeter. Additional seals shall be provided as required to ensure that the specified leakage requirement is met.

B. Gates may also be equipped with UHMW polyethylene seat/seals to restrict leakage and to prevent metal to metal contact between the frame and slide. The seat/seals shall extend to accommodate 1-1/2 times the height of the slide when the slide is in the fully closed or fully opened position. All upward opening gates shall be provided with a resilient seal to seal the bottom portion of the gate. The seal shall be attached to the invert member or the bottom of the slide and it shall be held in place with stainless steel attachment hardware.

C. All downward opening weir gates shall be provided with UHMW polyethylene seat/seals across the invert member. The seal system shall be durable and shall be designed to accommodate high velocities and frequent cycling without loosening or suffering damage. All seals shall be bolted or otherwise mechanically fastened to the frame or slide. Arrangement with seals that are force fit or held in place with adhesives shall be unacceptable. The seals shall be mounted so as not to obstruct the water way opening.

2.09 STEM GUIDES

A. Stem guide shall be provided when necessary to ensure that the maximum L/R ratio for the unsupported part of the stem is 200 or less. Stem guide brackets shall be fabricated of ASTM A 276 304 stainless steel and shall be outfitted with UHMW or bronze bushings. All stem guides shall be adjustable in two directions. All lift nuts shall be ASTM B 584 bronze.

2.10 HARDWARE

A. All hardware, including but not limited to bolts, nuts, washers, and anchors shall be 316 stainless steel. Provide all hardware, attachments, and related appurtenances for installation of the gates. All stainless steel bolts shall comply with ASTM F 593 standards. Stainless steel nuts shall comply with ASTM F 594 standards. All stainless steel shall conform to ASTM A 276 standards. All anchor bolts shall be a minimum of 1/2 inch diameter.

2.11 WALL THIMBLES

A. Wall thimbles shall be provided when specified or as shown on the Drawings. The wall thimble depth shall be equal to the thickness of the concrete wall in which the thimble is to be mounted. Wall thimbles shall be fabricated 304L stainless steel construction of adequate section to withstand all operational and installation stresses. Wall thimbles shall be constructed of 1/4 inch minimum thickness 304L stainless steel and the front face shall have a minimum thickness of 1/4 inch.

B. The fabrication process shall ensure that the wall thimble is square and plumb and the front face is flat to provide a proper mounting surface for the gate frame. The face of the wall thimble shall only be machined if recommended by the gate manufacturer. If the wall thimble is to be machined, the front face shall have a minimum thickness of 1/4-inch after machining. A water stop shall be welded around the periphery of the thimble. Wall thimbles shall be designed to allow thorough and uniform concrete placement during installation. Studs and nuts shall be 316 stainless steel. Water stop may be stitch welded. A neoprene gasket or bituminous coating shall be provided to seal between the gate frame and the wall thimble.

2.12 OPERATORS

A. Unless otherwise specified or shown on the Drawings all slide gates and weir gates shall be actuated by a gear operated hand wheel or gear operated hand crank mounted on the yoke. The bench stand shall be fully enclosed and equipped with roller bearings above and below the operating nut. Provide a mechanical seal around the operating nut. The pinion shaft shall be stainless steel and supported on roller bearings. A mechanical seal shall be provided around the pinion shaft where it extends from the hoist enclosure.

B. A side mount or front mount operator system utilizing right angle bevel boxes, stainless steel interconnecting shafting, and flexible couplings shall be provided by the Manufacturer when the bench stand is located over 48 inches above the operating floor.

Chain and sprocket systems shall also be acceptable for remote operators. The transmission system design shall provide for the gate to be operated from a position 30 inches above the operating floor. Bevel boxes for the transmission system shall be provided with stainless steel pinion shafts supported on roller bearings. A mechanical seal shall be provided around the pinion shaft where it extends from the bevel box enclosure.

C. An arrow with the word "OPEN" shall be permanently attached or cast onto the operator to indicate the direction or rotation to open the gate. Unless otherwise specified or indicated on the Drawings, the direction of rotation to open shall be to the "Left" (Counterclockwise).

2.13 FLOOR STANDS

A. Floor stands shall be provided for all other gate operators not supported on the gate yoke. Floor stands shall be constructed of fabricated stainless steel. The pedestal height shall be such that the operator shaft shall be approximately 36 inches above the operating floor. Wall brackets shall be used to support floor stands where shown on the Drawings. Wall brackets shall be constructed of fabricated stainless steel. Wall brackets shall be designed to withstand all operating loads.

B. Where shown on the Drawings, floor stands shall be offset type mounted on the floor surface and offset to align with the gate stem. Floor stands shall be mounted on a heavily ribbed reinforced fabricated stainless steel brackets anchored to structural members with 316 stainless steel hardware. The bracket and anchor bolts shall be sized to transfer the upward or downward thrust required to ultimately fail the stainless steel stem. The design and detail of the brackets and anchor bolts shall be provided by the gate Manufacturer for review by the Engineer. The bracket, anchors, back plate and accessories shall be provided as part of the gate assembly by the gate Manufacturer.

2.14 HAND WHEEL OPERATORS

A. Hand wheel operators shall have a minimum 15 inch and maximum 24 inch diameter hand wheel and shall operate the gate under the specified operating head with not greater than 40 lbs of force (rim-pull) on the hand wheel. All operators shall be fully enclosed, equipped with roller bearings above and below the operating nut and include mechanical seals.

2.15 CRANK OPERATORS

A. Crank operators shall have either single or double gear reduction depending upon the lifting capacity required. Double reduction operators shall also be 2-speed type with a square nut drive on the high speed and low speed shafts. Each type shall be provided with a threaded cast bronze lift nut to engage the operating stem. Bearings shall be provided above and below a flange on the operating nut to support both opening and closing thrusts.

B. Operators shall be designed for a maximum crank effort of 40 lbs under the specified operating conditions. Gears, where required, shall be steel with machined cut teeth designed for smooth operation. The pinion shafts on crank-operated floor stands, either single or double ratio, shall be supported on tapered roller bearings and enclosed in a cast aluminum or ductile iron case and cover.

C. Positive mechanical seals shall be provided on the operating nut and the pinion shafts to exclude moisture and dirt and prevent leakage of lubricant out of the hoist. Fittings shall be provided for the lubrication of all gears and bearings. The crank shall be cast aluminum or epoxy coated ductile iron with a revolving nylon or brass grip. The crank shall be removable. The operator shall be specifically designed to accommodate actuation via a drill drive when the crank is removed.

D. Provide dual operators on gates to maintain stability of the disc. Duel operators shall be joined together by a shaft such that operating a crank on one will cause both operators to move together. All rotating shafts shall be provided with guard shields.

2.16 FINISHING

A. Before exposure to weather and prior to shop painting all ferrous metallic surfaces including but not limited to operators, supports, floor stands, etc. shall be thoroughly cleaned, dry and free from all mill-scale, rust, grease, dirt and other foreign matter. For corrosion resistance all ferrous metallic surfaces shall be finished in accordance with SSPC SP 5 standards prior to prime painting at the factory.

B. All ferrous metallic surfaces shall be provided with a "Color Coordinated" two part epoxy paint finish in accordance with section 09 90 00, "PAINTS & COATINGS" and section 40 00 00 "BASIC PROCESS MATERIALS AND METHODS". Stainless steel, brass, bronze, aluminum, FRP, galvanized, and plastic components shall not be painted. Nameplates shall not be painted. The coating shall be resistant to sewage and other chemicals normally found in wastewater.

C. All stainless steel gates shall be provided with a mill finish. Unless otherwise specified or indicated on the Drawings, aluminum gates shall be provided with a mill finish. Provide anodized aluminum gates only where specifically specified or indicated on the Drawings.

2.17 WELDING

A. All welding shall use shielded arc, inert gas, MIG or TIG method. Filler wire shall be added to all welds to provide for a cross section equal to or greater than the parent metal. Butt welds shall fully penetrate to the interior surface and gas shielding to interior and exterior of the joint shall be provided. All welding shall be in accordance with the latest edition of the American Welding Society (AWS) standards. Field welding of stainless steel shall not be permitted unless directed by the Engineer.

B. Design and fabrication of structural steel members shall be in accordance with AISC and AWS Standards. The Manufacturer shall comply with the American Welding

Society (AWS) and the American Institute of Steel Construction (AISC) most current listed standards and qualifications in 2004 D1.1, the criteria per the requirements of Section 6 - Inspection - Structural Welding Code. Evidence of such AWS and AISC compliance shall be submitted with shop drawing submittals as follows:

1. AWS Certified Welding Inspectors (minimum 2 on staff) shall conform to all standards, current or previous as listed in section 6.1.4 AWS QC1, Standard and Guide for Qualification and Certification of Welding Inspectors.

2. AWS Non Destructive Testing Inspectors (Level I, II, III) for Magnetic Particle and Ultra-Sonic testing (minimum 2 on staff) shall conform to all standards, current or previous as listed in and in conformance with The American Society for Non-Destructive Testing (ASNT-TC-1A).

2.18 PASSIVATION

A. After fabrication all stainless steel gates shall undergo a passivation (pickling) process to ensure maximum resistance to corrosion. All stainless steel welds shall be bead blasted to remove weld scale. All welded areas shall be paste passivated. The gates shall be washed with a high-pressure wash of cold water to remove any remaining surface debris and promote the formation of an oxidized passive layer which is critical to the long life of the stainless steel. No stainless steel components shall be fabricated or assembled in a factory where carbon steel products are also fabricated, in order to prevent contamination by rust.

2.19 NAMEPLATES

A. Each major item of equipment shall have the Manufacturer's name, address, type or style, model or serial number, catalog number, and all other pertinent data on a plate secured to the item of equipment per specification 40 00 00 "BASIC PROCESS MATERIALS AND METHODS".

2.20 SPARE PARTS

A. The Manufacturer shall furnish a total of one (1) set of the following spare parts for each of the gates specified in this section. At a minimum, a set of spare parts shall include the following:

   1. One (1) set of seals of each size

B. The spare parts shall be individually boxed with the project name and part number clearly identified on each individual box. All spare parts shall be shipped in a separate crate and clearly labeled. Spare parts shall be stored indoors by the Contractor in a temperature controlled environment.

2.21 OILS & LUBRICANTS

A. The Manufacturer shall state in the operating and maintenance manual the amount of and specification for any lubricants required. All lubricants for the equipment shall be non-proprietary and easily obtainable from a local source for operations staff convenience. Designs which utilize proprietary and/or special lubricants shall not be acceptable.

B. All lubrication fittings shall be brought to the outside of all equipment so that they are readily accessible from the outside without the necessity of removing covers, plates, housings, guards or other appurtenances. All lubrication fittings of all gates shall be readily accessible from operator level. Lubrication fittings which are located in areas requiring the Owner to enter tankage/vessels for access shall not be acceptable. Provide zerk-type fittings for all lubrication points.

2.22 DESIGN BASIS MANUFACTURER

A. The Contract Drawings are based upon Whipps, Inc. As such, the physical installation, all services, all connections, and all appurtenances were designed around the characteristics of this product. In addition to an "Engineer Approved Equal", Rodney Hunt Company, and Hydro-Gate Corporation are acceptable Manufacturers. Their equipment will differ slightly from the Contract Documents. Modifications to piping, other services, and structures shall be required. The Contractor shall coordinate these modifications with the Manufacturer and the Engineer. Any additional costs required for these modifications shall be at no additional cost to the Owner or Engineer. No change in Contract Time shall be granted for arrangements and/or modifications which differ from the Contract Documents. The Contractor shall assume the cost and the responsibility for satisfactorily accomplishing all necessary changes and/or modifications for "Named Alternate Manufacturers" as well as "Engineer Approved Equal" equipment which is submitted.

B. Submittals for the "Design Basis Manufacturer", "Named" products and/or equipment other than the design basis; as well as "Engineer Approved Equal" products and/or equipment shall specifically outline "All" deviations from the Contract Documents. Submittals which do not specifically outline "All" deviations from the Contract Documents; including the "Design Basis Manufacturer", "Named Alternate Manufacturer(s)", and "Engineer Approved Equal Manufacturer(s)" will be "Rejected" without review. No change in Contract Time shall be granted for delays in construction which result from lack of coordination and/or lack of "All" deviations from the Contract Documents being specifically outlined in the submittals.

C. All gates of the same type, style, and duty shall be supplied by a single Manufacturer. All slide gates and weir gates shall be a product of the following Manufacturer.

1. Whipps, Inc.
2. Rodney Hunt Corporation

3. Hydro-Gate Corporation
4. Golden Harvest, Inc.
5. Engineer Approved Equal

PART 3 – EXECUTION

3.01 INSTALLATION

A. Install all slide gates, weir gates and appurtenances in accordance with the Manufacturer's instructions, recommendations, and reviewed shop Drawings. All frames and guides shall be installed in a true vertical plane with 90 degree corners. Prior to installation, the Contractor shall check all gate grooves and remove/clean off all foreign matter. Clean all contact surfaces on each gate to ensure a proper fit and seal.

B. Coated gate components shall be handled in a manner so as to avoid damaging the coating. All damaged coatings shall be repaired.

C. Gates with embedded guides and inverts shall be installed in accordance with the recommendations of the Manufacturer and Engineer. All gates shall be aligned, secured, and checked for free operation prior to being grouted in place.

3.02 FIELD TESTING

A. The equipment startup and demonstration period for the gates previously specified shall include the provisions of Division 01 General Requirements and also include but is not limited to that which is specified herein.

B. Prior to acceptance, an operational test of all gates shall be performed to determine if the installed equipment meets the purpose and intent of the Contract Documents. Tests shall demonstrate that the equipment is not mechanically, structurally, or otherwise defective; is in safe and satisfactory operating condition; and conforms to the specified operating characteristics. Tests shall include checks for proper alignment, proper operation (without binding), proper connections, and satisfactory operational performance. Provide a demonstration of the ability to operate each gate by opening and closing the gate completely without vibration or jamming.

C. Provide all the requirements to conduct a proper field test which include but are not limited to: water, facilities, labor, materials, supplies and test instruments.

D. After installation, all gates shall be field tested at maximum differential head for a minimum period of two (2) hours to ensure that all items of the equipment are in compliance with the contract documents, including the minimum leakage requirements specified herein. The maximum allowable leakage for the gates shall be 0.1 gpm/foot of perimeter under the design seating head. Gate leakage shall meet or exceed the requirements of AWWA C 513 standards.

3.03 RETESTING

A. In the event that any unit fails to meet the above requirements, the necessary changes shall be made and the unit retested. If the unit remains unable to meet the test requirements to the satisfaction of the Engineer, it shall be removed and replaced with a satisfactory unit at no additional cost to the Owner.

END OF SECTION

SECTION 40 90 00

INSTRUMENTATION AND CONTROL FOR PROCESS SYSTEMS

PART 1 – GENERAL

1.01 SUMMARY

A. Section Includes

1. Contractor shall provide all equipment, instruments, services, appurtenances and labor as specified herein and in the following associated Specifications and as shown on the Drawings:

   a. Specification 40 91 00 – Primary Process Measurement Devices

   b. Specification 40 94 43 – Programmable Logic Controllers

   c. Specification 40 95 13 – Process Control Panels and Hardware

B. Contractor shall provide all equipment, instruments, services, appurtenances and labor, separate delivery and unloading of the SCADA panels as specified herein and in the following associated Specifications and as shown on the Drawings.

1. Specification 40 95 13 – Process Control Panels and Hardware

C. Related Requirements

1. Division 26 Electrical- for wiring standards and practices.

D. WORK NOT INCLUDED

1. Programming of the existing plant PLC, HMI and the new Recycle building PLC shall be by others.

1.02 PRICE AND PAYMENT PROCEDURES

A. Measurement and payment requirements: per Division 01 General Requirements.

1.03 ADMINISTRATIVE REQUIREMENTS

A. Coordination, Sequencing, and Scheduling: per Division 01 General Requirements.

1.04 SUBMITTALS

A. Provide submittals in accordance with Division 01 General Requirements.

B. Prior to submittal to the Engineer, Shop Drawings and submittal information shall be thoroughly checked by the Contractor to insure compliance with Contract Documents. The Contractor shall be Responsible for verifying that all equipment, instruments, and materials submitted upon shall fit within available space and

maintain specified physical clearances, and that all equipment is compatible with the operation of the overall system. Submittal to the Engineer of Shop Drawings and submittal information implies that the Contractor has reviewed the information and all requirements have been satisfied.

C. Submittals and Shop Drawings shall consist of the following elements:

1. Project name, location, Project number
2. Contractor name, address
3. Table of contents or index, including equipment, instruments or materials being submitted, utilizing identification consistent with Contract Documents (equipment designation, instrument tag number, control panel name, etc.), as well as proposed, manufacturer, style/model, and part number.
4. For instrumentation submittals, refer to Section 40 91 00, Primary Process Measurement Devices, for specific requirements.
5. For Programmable Logic Controllers (PLCs) and Operator Interface Terminals (OITs) submittals, refer to Section 40 94 43, Programmable Logic Controllers, for specific requirements.
6. For SCADA control panel shop drawing submittals, refer to Section 40 95 13, Process Control Panels and Hardware, for specific requirements.

D. The submittal information for each section shall be contained in a single submission. Incomplete or partial submissions shall not be accepted.

E. Operations and Maintenance (O&M) Materials

1. The O&M materials shall include descriptions of all equipment, the nature and intended modes of operation, testing procedures of all units in the System, and safety measures to be taken in operation. All necessary procedures and methods for effective operation of the System shall be included.
2. The O&M materials shall include record Drawings and instructions necessary for the planned maintenance of all equipment in the system. The O&M Manuals will incorporate maintenance procedures and schedules, and they will coordinate and be cross-referenced to detailed operation procedures provided by the manufacturers.
3. Information for O&M manuals shall be organized in three-ring binders, provided with labeled dividers, including a table of contents clearly describing the information included and order.
4. Include in the O&M manuals a list of local service departments of authorized distributors for all equipment, instruments, services and appurtenances installed under this Contract. These service departments

should stock the manufacturer's standard parts and equipment, provide local service options, etc.

5. For instrumentation O&Ms, refer to Section 40 91 00, Primary Process Measurement Devices, for specific requirements.

6. For Programmable Logic Controllers (PLCs) and Operator Interface Terminals (OITs) O&Ms, refer to Section 40 94 43, Programmable Logic Controllers, for specific requirements.

7. For SCADA control panel O&Ms, refer to Section 40 95 13, Process Control Panels and Hardware, for specific requirements.

1.05 DELIVERY, STORAGE AND HANDLING

A. Coordinate equipment, instrument, and material delivery to coincide with the Project schedule. If the delivery schedule of any equipment, instrument, or material shall affect the overall Project schedule, notify the Engineer in writing immediately. Include in the written notification documentation from the equipment Supplier indicating the revised delivery schedule and reason for the change.

B. When applicable, coordinate delivery of equipment, instruments, or materials to be delivered directly to another trade or vendor for installation in a system or control panel provided under another Specification section.

C. Exercise care while loading, unloading and transporting equipment, instruments and materials to avoid damage. Check all equipment, instruments, and materials for damage or defects within seven (7) days of delivery to the Project Site.

D. Equipment, instruments, and materials required to be stored on Site prior to installation shall be stored in such a manner to avoid damage or exposure to water, dust, or construction debris.

E. Repair or replace, at no additional cost to the Owner, all equipment, instruments and materials that are defective or damaged during installation, to the satisfaction of the Engineer.

1.06 QUALITY ASSURANCE

A. Qualifications: per Division 01 General Requirements and as follows:

1. The Contractor shall have completed Work of similar or greater complexity on at least three (3) previous Projects within the last five (5) years. Successful completion shall be defined as a finished Project completed on time, without any outstanding claims or litigation involving the Contractor. They shall provide, for a period of not less than twelve (12) months from Final Acceptance of the Project, all labor, tools, materials, and equipment necessary to address issues or defects in any system that result from faulty workmanship, installation, equipment,

instruments or materials, and any resulting damage from said defects or faults, at the convenience of the Owner.

2. The Contractor shall furnish SCADA control panels fabricated per the Drawings (as shown on the I sheets), by a UL 508A approved Panel Shop regularly engaged in furnishing, installing and wiring similar equipment for use in water and wastewater treatment facilities and that has been in satisfactory operation for at least five (5) years.

B. Instruments, SCADA control panels and materials provided under this Contract shall comply with the Specifications, shall be supplied from manufacturers regularly engaged in the production of such products, shall be standard products (not special order or custom-made) wherever possible, and shall be of the manufacturer's latest design.

C. Instruments, SCADA control panels, and materials supplied under this Contract shall be subject to approval by the Engineer and shall demonstrate equal appearance, quality, and performance to that specified herein. The Contractor is Responsible for verifying the availability of all equipment, instruments and materials proposed for use in the execution of this Contract prior to submission to Engineer for approval. If production of equipment, instrument, or material is discontinued, the Contractor shall submit an alternate of comparable quality to the Engineer for approval prior to execution of Work, and at no additional cost to Owner.

PART 2 – PRODUCTS (Not Used)

PART 3 – EXECUTION

3.01 GENERAL

A. Instruments, SCADA control panels, equipment, and all other materials provided under this Contract which come with a manufacturer's warranty shall have the warranty transferred to the Owner upon Final Acceptance.

B. After installation, all provided instruments and SCADA control panels shall be powered up, tested, and witnessed by the Engineer for proper termination and operation.

C. After installation, the Contractor shall calibrate each instrument that requires calibration in accordance with the manufacturer's recommended calibration procedure and include the calibration sheets in the O&M manual.

END OF SECTION

SECTION 40 91 00

PRIMARY PROCESS MEASUREMENT DEVICES

PART 1 – GENERAL

1.01 SUMMARY

A. SECTION INCLUDES

1. The Contractor shall provide all instrumentation, equipment mounting, vendor-supplied cables between elements and transmitters and other related appurtenances as specified herein and on the Drawings.
2. The Contractor shall provide all labor, tools, materials, and equipment necessary to install and start up instruments as described herein and on the Drawings.

B. WORK NOT INCLUDED

1. Programming of the existing plant PLC, HMI and the new Recycle building PLC shall be by others. Instrument setup and calibration is by the supplier.

C. RELATED DOCUMENTS

1. Drawings and general provisions of Contract, including General and Supplementary General Conditions and other Specification Sections, which apply to the Work of this Section.
2. Refer to Division 26, Electrical for wiring standards and practices.

1.02 PRICE AND PAYMENT PROCEDURES

A. Measurement and payment requirements: per Division 01 General Requirements.

1.03 REFERENCES

1.04 ADMINISTRATIVE REQUIREMENTS

A. Coordination, Sequencing, and Scheduling: per Division 01 General Requirements.

1.05 SUBMITTALS

A. Submit detailed information for each instrument or control device in accordance with Section 40 90 00, Instrumentation and Controls General Requirements.

B. In addition to the requirements of Section 40 90 00, the submittals shall include:

1. Instrument data sheet for each instrument.

2. Product (item) name used herein and Tag number as shown on the Drawings.
3. Manufacturers complete model number.
4. Location of the device.
5. Input - output characteristics.
6. Range, size, and graduations.
7. Physical size with dimensions, enclosure NEMA classification, and mounting details.
8. Materials of construction of all components.
9. Calibration certificates provided by manufacturer.
10. All installation and operation manuals.

C. The Contractor shall clearly define exceptions or deviations to the Specifications or Drawings. The Contractor shall submit sufficient details to the Engineer for evaluation.

1.06 QUALITY ASSURANCE

A. Provide in accordance with Division 01 General Requirements and as follows:

B. Instruments and appurtenances provided under this Contract shall comply with the Specifications, shall be supplied from manufacturers regularly engaged in the production of such products, shall be standard products (not special order or custom-made) wherever possible, and shall be of the manufacturer's latest design.

C. Instruments and appurtenances supplied under this Contract shall be subject to approval by the Engineer and shall demonstrate equal appearance, quality, and performance to that specified herein. The Contractor is Responsible for verifying the availability of all equipment, instruments and materials proposed for use in the execution of this Contract prior to submission to Engineer for approval. If production of equipment, instrument, or material is discontinued, the Contractor shall submit an alternate of comparable quality to the Engineer for approval prior to execution of Work, and at no additional cost to Owner.

1.07 DELIVERY, STORAGE, AND HANDLING

A. Deliver, store, and handle products in accordance with manufacturer's recommendations and in accordance with Section 40 90 00, Instrumentation and Control General Requirements.

1.08 SITE CONDITIONS

A. Existing Conditions: per Division 01 General Requirements.

1.09 MAINTENANCE

A. Operations and maintenance (O&M) information shall be provided in accordance with Section 40 90 00, Instrumentation and Controls General Requirements.

B. In addition to the requirements set forth in Section 40 90 00, the instrumentation section of the O&M manuals shall consist of the following:

1. Instrument list or ISA data sheets, including tag numbers
2. All submittal information listed in paragraph 1.05 above

1.10 WARRENTY

PART 2 – PRODUCTS

2.01 INSTRUMENTATION - GENERAL

A. Instrumentation supplied shall be of the manufacturer's latest design and shall produce or be activated by signals that are established standards for the water and wastewater industries.

B. Instrumentation requiring power supplied from a source other than the control panel to which it is connected shall operate on 120VAC, single phase, 60 HZ current, unless specifically indicated otherwise. This power shall be supplied from the closest local electrical distribution panel with a breaker for each circuit.

C. Electronic instrumentation shall be of the solid-state type. Analog control signals shall be linear and be industry standard currents of 4 to 20 mA DC (milliampere direct current), however, signals between instruments within the same panel or cabinet may be 1-5 VDC (volts direct current), or the like. No zero based signals shall be allowed.

D. Outputs of equipment that are not of the standard signals as outlined, shall have the output immediately raised and/or converted to compatible standards signals for remote transmission. No zero-based signals shall be allowed.

E. Instruments shall be provided with stainless steel mounting hardware and/or galvanized steel floor stands, wall brackets, or instrument racks as appropriate for each location.

F. Equipment installed in a hazardous area shall meet Class, Group, and Division as shown on the Contract Electrical Drawings, to comply with the National Electrical Code.

G. Indicators and recorder readouts shall be linear in the process units.

H. Transmitters shall be provided with either integral indicators or conduit mounted indicators in process units, accurate to ± 2 percent.

I. Electronic equipment shall be of the manufacturer's latest design. Circuit boards and associated components shall have suitable conformal coating to prevent contamination by dust, moisture, and fungus. Solid-state components shall be conservatively rated for their purpose to assure optimum long-term performance and dependability over normally anticipated atmospheric conditions of temperature, pressure and humidity. The field-mounted equipment and system components shall be designed for installation in dusty, humid, and slightly corrosive service conditions.

J. Instruments furnished herein shall be heavy-duty type, designed for continuous industrial service. The system shall contain products of a single manufacturer, insofar as possible, and shall consist of equipment models that are currently in production. All equipment provided shall be of modular construction and shall be capable of field expansion.

K. Lightning/Surge Suppression - Provide individual surge protection means for each field instrument mounted outside the building from the control panel to which they are connected. Instruments mounted inside the same building as the control panel to which they are connected shall not require surge protection.

L. Instruments shall be provided as indicated on the Instrument Index and in the Instrument Data Sheets, included as an attachment at the end of this Section. These documents include the instrument tag names, physical requirements, control requirement, and basis of design manufacturer and model number information.

2.02 FLOW INSTRUMENTATION

A. Magnetic Flow Meter (10") – Refer to Instrument Data Sheet 2.02A.

2.03 LEVEL INSTRUMENTATION

A. Float Switch – Refer to Instrument Data Sheet 2.03A.

B. Submersible Level Transmitter – Refer to Instrument Data Sheet 2.03B

2.04 SECURITY INSTRUMENTATION

A. PIR Occupancy Detector- Refer to Instrument Data Sheet 2.04A.

2.05 TEMPERATURE INSTRUMENTATION

A. Temperature Switch- Refer to Instrument Data Sheet 2.05A.

2.06 ANALYTICAL INSTRUMENTATION

A. Refrigerated Sampler – The Refrigerated Sampler is furnished by the OWNER. The sampler is an ISCO model 5800 that uses an additional status/alarm interface box (part # 605314710) to connect with the SCADA system. The

CONTRACTOR shall furnish the status/alarm interface box and outer enclosure shown on Drawing sheet C-500. The CONTRACTOR shall install the Refrigerated Sampler, status/alarm interface box and outer enclosure as shown on the drawing an in accordance with manufacturers requirements.

PART 3 – EXECUTION

3.01 INSTALLATION AND MOUNTING

A. The Contractor shall provide all labor, tools, material, and equipment required to mount instruments in the locations shown on the Drawings, in accordance with manufacturer-recommended mounting practices. The location of equipment, transmitters, alarms, and similar devices shown on the Drawings are approximate only. Exact locations shall be as approved by the Group or Engineer during construction. Obtain in the field all information relevant to the placing of process control Work and in case of any interference with other Work, proceed as requested by the Engineer.

B. The Contractor shall make all necessary mechanical changes to install new instrumentation equipment provided under this Contract. This Work includes all fittings, fabrications, supports, guides, restraints, bolting, gaskets, and accessories. All Work shall be done in a workmanlike manner.

C. The instrumentation Drawings indicate the intent of the interconnections between the individual instruments. Any exceptions should be noted and communicated to the Engineer and/or Group in writing.

D. Work shall be executed in full accordance with codes and local rulings. Should any Work be performed contrary to said rulings, ordinances, and Regulations, the Contractor shall bear full responsibility for such violations and assume all costs arising there from.

E. Instrument cabinets located outdoors or in unheated locations shall be provided with heating and/or cooling devices as necessary to maintain all instruments and or electronics installed in those cabinets within their design temperature limits.

F. Brackets and hangers required for equipment mounting shall be provided. They shall be installed in a workmanlike manner and not interfere with any other equipment.

G. The shield on each process instrumentation cable shall be continuous from source to destination and be grounded as directed by the manufacturer of the instrumentation equipment, but in no case shall more than one (1) ground point be employed for each shield.

H. The Contractor shall coordinate the installation, the placing and location of system components, their connections to the process equipment panels, cabinets, and devices. The Contractor shall be responsible for ensuring that all field wiring

for power and signal circuits are correctly done in accordance with best industry practice and provide for all necessary system grounding to ensure a satisfactory functioning installation.

3.02 INSPECTION AND TESTING

A. Submit detailed Test, Procedure, and Startup instructions for each instrument.

B. The Contractor shall provide the services of a qualified service representative for the instrumentation provided under this Contract, for checking the installation, making the necessary adjustments and calibrations, placing the equipment in operation, and performing the acceptance tests. The representative also shall be available for not less than two (2) days to instruct operating personnel in the use, operation, and maintenance of the equipment during the initial operating period.

C. The Contractor shall test and calibrate in place the instrumentation to demonstrate that it meets the accuracy requirements for the conditions specified herein. Provide all labor, equipment, and incidentals required for the tests, including electric power, water, instrument air, etc. required for tests. The Engineer shall witness all field tests and conduct all field inspections. The Contractor shall give the Engineer a minimum of ten (10) working days' notice of the dates and times scheduled for tests. Rectify any deficiencies found and retest Work affected by such deficiencies at the Contractor's expense. Record data from each field test shall be recorded and documented in a formal field test report.

3.03 ATTACHMENTS

A. Instrument Index (1 page)

B. Instrument Data Sheets (5 pages)

END OF SECTION

INSTRUMENT INDEX				
Drawing Number	**Instrument Tag**	**Data Sheet**	**Instrument Description**	**Notes**
E-015	FE/FIT-1000	2.02A	Magnetic Flow Meter	
E-015	LSLL-1000	2.03A	Low Low Level Float Switch	
E-015	LSHH-1000	2.03A	High High Level Float Switch	
E-015	LIT-1000	2.03.B	Submersible Level Transmitter	
E-015	ZSC-1000	2.04.A	Beam Motion Detector	
E-015	TS-1000	2.05.A	Low Temperature Switch	
E-015	AIT-1000	2.06.A	Refrigerated Sampler (supplied by OWNER)	Installation Only

This page intentionally left blank

MAGNETIC FLOW METER
INSTRUMENT DATA SHEET 2.02A

WOODARD &CURRAN	MAGNETIC FLOWMETERS	TAG NO:	*FE/FIT-1000*	PAGE:	*1 of 5*
		DRAWING #:	*E-301*	PRINTED:	*7/23/2014*
		SPEC. NO:	*40 91 00, 2.02A*		

PROJECT NUMBER:	*227251.30*	REV	REVISION DESCRIPTION	BY	DATE
DESCRIPTION:	*LRWU Residual Handling Facility Upgrades*	*0*	*FINAL*	*DC*	*7/23/2014*

SERVICE:	*Recycle Water Magnetic Flow Meter*						
FLOWTUBE	Meter Size:	*10"*	Electrode Material:	*316 SS*			
	Flow Range:	*0-3.6 MGD*	Ground Type:	*Electrode*			
	End Connections:	*150# RF Flange*	Ground Material:	*316 SS*			
	Tube Material:	*Stainless/Carbon Steel*	Line Size:	*10"*			
	Liner Material:	*PTFE*	Line Material:	*Carbon Steel*			
	Electrode Type:	*Standard*	Enclosure Rating:	*NEMA 4X*			
TRANSMITTER	Mounting:	*Remote*	Enclosure Material:	*Aluminum w/corrosion coating*			
	Cable Length:	*50' (See Note 1)*	Enclosure Rating:	*NEMA 4X*			
	Power Supply:	*90-250VAC, 50—60Hz*	Accuracy:	*0.25%*			
	Local Indicator/Style:	*Yes / LCD*	Alarm Relays/Rating:	*Fault / 3W @ 24VDC*			
	Totalizer:	*Yes- Dry Contact/Relay*	Comm. Protocol:	*4-20mA, HART Protocol*			
CALIBRATION	Input (0% / 100%):		Process (0% / 100%):				
	Output (0% / 100%):		Pulse Output / Value:				
PROCESS DATA	Proc Fluid / State:	*Raw Water*	Flow (Min/Oper/Max):	*0*		*3.6*	
	Specific Gravity:	-	Flow Units:	*MGD*			
	Percent Solids:	-	Pressure (Min/Oper/Max):			*150*	
	Conductivity:	-	Pressure Units:	*psi*			
	Viscosity:	-	Temperature (Min/Oper/Max):	*40*		*120*	
	Line Size / Sched.:	*12"/CS*	Temperature Units:	*°F*			
	Line No.:	-					
ACCESSORIES	Empty Tube Detection:	*Yes*	Option:	*N/A*			
	Instrument Tag:	*Yes- SS, engraved. See above for Tag Numbers*	Option:	*N/A*			
	Calibration Standard:		Option:	*N/A*			
MANUFACTURER OR APPROVED EQUAL	*Manufacturer 1:*	*Endress & Hauser- Promag 50W Series (Basis of Design)*					
	Manufacturer 2:	*Siemens- 5100W Series*					
	Manufacturer 3:	*Rosemount 8750WA Series*					
NOTES	*1.Contractor shall verify cable length in the field.*						
	2.FE/FIT-1000 – Recycle Water Flow						
	3.						
	4.						

FLOAT LEVEL SWITCHES - INSTRUMENT DATA SHEET 2.03A

WOODARD &CURRAN	LEVEL SWITCHES	TAG NO:	LSLL-1000, LSHH-1000	PAGE:	2 of 5
		DRAWING:	E-301	PRINTED:	9/10/2014
		SPEC. NO:	40 91 00, 2.03A		

PROJECT NUMBER:	227251.30	REV	REVISION DESCRIPTION	BY	DATE
DESCRIPTION:	LRWU Residual Handling Facility Upgrade	0	FINAL	DC	7/23/2014

SERVICE: *Recycle Water Wetwell – Low Low and High High Level Floats*

GENERAL	Type:	*Pear Shaped Bulb Float*	Conn Wetted Mat'l:	
	Press/Temp Rating:	*32-170 Degrees F*	Fail Safe:	
	Stilling Well:		Switch Actuation:	*Narrow Angle, N.O.*
	Rod Length/Material:		Sw. Contact Rating:	*10 Amps, 120 VAC*
	Body Material:	*Polypropylene Shell*	Conduit Connection:	
	Float Fill Material:	*Solid Polyurethane Foam*	Switch Mounting:	*Hung By Cord*
	Float/Displacer Size:	*3.5" x 5.00"*	Cable Length:	*40'*
	Switch Type:	*Non Mercury, Mechanically Activated Micro Switch*	Cable Jacket Mat'l:	*Chlorinated Polyethylene*
			Cable Type/Rating:	*SJOOW-300 Volt, 18/2*
CALIBRATION	1st Switch Level:		3rd Switch Level:	
	2nd Switch Level:			
PROCESS DATA	Proc Fluid / State:	*Raw Water*	Vessel Agitated:	
	Specific Gravity:		Vessel Height:	
	Percent Solids:		Vessel Material:	
	Conductivity:		Flow (Min/Oper/Max):	
	Di-Electric Const.:		Flow Units:	
	Viscosity:		Pressure (Min/Oper/Max):	
	Line Size / Sched.:		Pressure Units:	
	Line No.:		Temperature (Min/Oper/Max):	*40* / *120*
	Equipment Number:		Temperature Units:	*Degrees F*
ACCESSORIES	Tether/Weight:	*AKC-10-3 Chain and weight kit*	Option-1:	
	Loc. Indicators/Style:		Option-2:	
	Instrument Tag:	*LSLL-1000, LSHH-1000*	Option-3:	
MANUFACTURER OR APPROVED EQUAL	Manufacturer 1:	Conery Manufacturing 2902-B8 (Basis of Design)		
	Manufacturer 2:			
	Manufacturer 3:			

NOTES

1. *Contractor shall verify cable length in the field.*
2. *LSLL-1000 – Low Recycle Wetwell Level*
3. *LSHH-1000 – High Recycle Wetwell Level*

SUBMESIBLE LEVEL TRANSDUCER - INSTRUMENT DATA SHEET 2.03B

WOODARD &CURRAN	SUBMERSIBLE LEVEL TRANSMITTER	TAG NO:	*LT-1000*	PAGE:	*310 of 5*
		DRAWING:	*E-205*	PRINTED:	*9/10/2014*
		SPEC. NO:	*40 91 00, 2.03B*		

PROJECT NUMBER:	*227251.30*	REV	REVISION DESCRIPTION	BY	DATE
DESCRIPTION:	*LRWU Residual Handling Facility Upgrade*	*0*	*FINAL*	*DC*	*7/23/2014*

SERVICE: *Recycle Wetwell - Submersible Level (Pressure) Transmitter*

GENERAL	Type:	*Gauge*	Connection-Process:	*2.5" Diaphragm, 316 SS*
	Span Range Min/Max:	*0-10 PSI*	XMTR Body Material:	*316 SS*
	Output Signal:	*4-20mA*	XMTR Element Material:	
	Accuracy:	*0.5% span*	XMTR Fill Fluid:	
	Air/Power Supply:	*24 VDC, Loop Powered*	Diaphragm Fill:	*Glycerin*
	Max. Press. Rating:		Seal Material (Non-Wet):	
	Area Classification:		Dia/Housing (Wet):	
	Enclosure Rating:	*Submerged*	Fill Fluid:	
	Local Indicator/Type:		Cable Length:	*40'*
	Mounting – Elect.:	*½" NPT*	Cable Material:	*Polyurethane*
	Mounting – Sensor:		Capillary Armor:	
CALIBRATION	Input (0% / 100%):		Scale (0% / 100%):	
	Output (0% / 100%):		Process (0% - 100%):	

PROCESS DATA	Proc Fluid / State:	*Raw Water*	Flow (Min/Oper/Max):			
	Specific Gravity:		Flow Units:			
	Percent Solids:		Pressure (Min/Oper/Max):	*0*		*10*
	Conductivity:		Pressure Units:	*PSI*		
	Viscosity:		Temperature (Min/Oper/Max):	*35*		*125*
	Line Size / Sched.:		Temperature Units:	*Degrees F*		
	Line No.:					

ACCESSORIES	Vent/Drain:		Option-1:	*Protective Stand Off Plate*
	Instrument Tag:	*Yes- SS, Engraved. See above for tag number*	Option-2:	
	Manifold Valve:		Option-3:	

MANUFACTURER OR APPROVED EQUAL	*Manufacturer 1:*	*Blue Ribbon - Birdcage*
	Manufacturer 2:	*Measurement Specialties - KPSI*
	Manufacturer 3:	*Mercoid PBLTX Series*

NOTES

1. LT-1000 Recycle Wetwell Level (Pressure) Transmitter
2.
3.
4.

MOTION DETECTOR DATA SHEET 2.04A

WOODARD &CURRAN	MOTION DETECTOR SWITCH	TAG NO:	ZSC-1000	PAGE:	4 of 5
		DRAWING:	E-301	PRINTED:	9/10/2014
		SPEC. NO:	40 91 00, 2.04A		

PROJECT NUMBER:	227251.30	REV	REVISION DESCRIPTION	BY	DATE
DESCRIPTION:	LRWU Residual Handling Facility Upgrade	0	FINAL	DC	7/23/2014

SERVICE:	Recycle Building – Motion Detector Switch			
GENERAL	Type:	Infrared Photoelectric Beam	Conn. Size Electric:	
	Control Range:	0 – 70'	Electrical Rating:	24 VDC, 38mA (Max) draw
	Switch Type:	N.C. Dry Contact	Switch Rating:	0.2A at 28 VDC
	Fixed/Adjustable:	Angle Adjustable Beam	Interrupt Period:	Selectable
	Direct/Remote Mount:	Wall mount	Enclosure Class:	IP65
	Sensitivity:	Automatic Gain Control	Detection Method:	Infrared Beam Interruption
	Surge Protection:	Integral protector, 14kV	Case Intrusion:	Tamper switch alarm for case open
CALIBRATION	Input (0 – 100%):		Process (0 – 100%):	
	Output (0 – 100%):		Pulse Output / Value:	
PROCESS DATA	Proc Fluid / State:	Air, ambient	Humidity (Min/Oper/Max):	95%
	Specific Gravity:		Humidity Units:	
	Percent Solids:		Pressure (Min/Oper/Max):	
	Conductivity:		Pressure Units:	
	Viscosity:		Temperature (Min/Oper/Max):	40 100
	Line Size / Sched.:		Temperature Units:	Fahrenheit
	Installed Height:	18" above floor		
ACCESSORIES	Instrument Tag:	Yes, SS, See above		
	Mounting:	Includes wall mounting brackets and hardware		
MANUFACTURER OR APPROVED EQUAL	Manufacturer 1:	Optex AX-70TN (Basis of Design)		
	Manufacturer 2:			
	Manufacturer 3:			
NOTES	1. Contractor to verify transmitter / receiver location in the field			
	2. ZSC-1000 – Recycle Building Motion Detector Switch			
	3.			
	4.			

TEMPERATURE SWITCH DATA SHEET 2.05A

WOODARD &CURRAN	TEMPERATURE SWITCH	TAG NO:	TS-1000	PAGE:	5 of 5
		DRAWING:	E-301	PRINTED:	9/10/2014
		SPEC. NO:	40 91 00, 2.05A		

PROJECT NUMBER:	227251.30	REV	REVISION DESCRIPTION	BY	DATE
DESCRIPTION:	LRWU Residual Handling Facility Upgrade	0	FINAL	DC	5/2/2014

SERVICE:	Recycle Building Low Temperature Switch			
GENERAL	Type:	Line Voltage Thermostat	Conn. Size Electric:	½"
	Control Range:	-10 – 100 F	Electrical Rating:	120 VAC
	Switch Type:	SPST	Switch Action:	Open on rise
	Fixed/Adjustable:	Adjustable	Max Pressure:	
	Direct/Remote Mount:	Wall mount	Enclosure Class:	NEMA 4X
	Sensor Cable Length:			
	Probe Material:			
	Housing Material:			
THERMOWELL	Type:		Process Connection:	
	Material:		Instrument Connect.:	
	Bore:		Insertion Length (U):	
			Lag Length (T):	
PROCESS DATA	Proc Fluid / State:	Air, ambient	Flow (Min/Oper/Max):	
	Specific Gravity:		Flow Units:	
	Percent Solids:		Pressure (Min/Oper/Max):	
	Conductivity:		Pressure Units:	
	Viscosity:		Temperature (Min/Oper/Max):	100
	Line Size / Sched.:		Temperature Units:	Fahrenheit
	Line No.:			
ACCESSORIES	Instrument Tag:	Yes, SS, See above		
MANUFACTURER OR APPROVED EQUAL	Manufacturer 1:	Dayton 2E815 (Basis of Design)		
	Manufacturer 2:			
	Manufacturer 3:			
NOTES	1. TS-1000 – Recycle Building Low Temperature Switch			
	2.			
	3.			
	4.			

This page intentionally left blank

SECTION 40 94 43

PROGRAMMABLE LOGIC CONTROLLERS

PART 1 – GENERAL

1.01 SUMMARY

A. Section Includes

1. The Contractor shall provide all labor, materials, equipment and appurtenances to furnish and install the programmable logic controllers and operator interface terminals manufactured by Allen Bradley, specified herein and on the Drawings.

   a. The Owner has determined that specifying this proprietary equipment for the Project is in the public's best interest as the Owner has multiple programmable logic controllers and operator interface terminals manufactured by the same manufacturer, to ensure compatibility, interchangeability of parts, and to simplify and reduce the cost of maintenance and repairs.

B. Definitions

1. PLC: Programmable Logic Controller
2. RIO: Remote Input/Output Rack
3. HMI: Human Machine Interface
4. RTU: Remote Terminal Unit
5. I/O: Input Output
6. SCADA: Supervisory Control and Data Acquisition

C. WORK NOT INCLUDED

1. Programming of the existing plant PLC, HMI and the new Recycle building PLC shall be by others.

D. RELATED DOCUMENTS

1. Drawings and general provisions of Contract, including General and Supplementary General Conditions and other Specification Sections, which apply to the Work of this Section.

1.02 PRICE AND PAYMENT PROCEDURES

A. Measurement and payment requirements: per Division 01 General Requirements.

1.03 REFERENCES

1.04 ADMINISTRATIVE REQUIREMENTS

A. Coordination, Sequencing, and Scheduling: per Division 01 General Requirements.

1.05 SUBMITTALS

A. Submit in accordance with Division 01 General Requirements.

1.06 QUALITY ASSURANCE

A. Provide in accordance with Division 01 General Requirements and as follows:

B. PLCs provided under this Contract shall comply with the Specifications, shall be supplied from Allen Bradley, shall be standard products (not special order or custom-made) wherever possible, and shall be of the manufacturer's latest design.

C. This specification has been developed to establish minimum requirements for the solid-state programmable controllers designed to provide high reliability in industrial applications. All PLCs and associated software provided under this Contract shall meet the requirements of this Specification, unless approved by the Engineer. If production of equipment is discontinued, the Contractor shall submit an alternate of comparable quality to the Engineer for approval prior to execution of Work, and at no additional cost to Owner.

1.07 DELIVERY, STORAGE, AND HANDLING

A. Provide in accordance with Division 01 General Requirements.

B. Coordinate equipment, instrument, and material delivery to coincide with the Project schedule. If the delivery schedule of any equipment, instrument, or material shall affect the overall Project schedule, notify the Engineer in writing immediately. Include in the written notification documentation from the equipment Supplier indicating the revised delivery schedule and reason for the change.

C. When applicable, coordinate delivery equipment, instruments, or materials to be delivered directly to another trade or vendor for installation in a system or control panel provided under another Specification Section.

D. Exercise care while loading, unloading and transporting equipment, instruments and materials to avoid damage. Check all equipment, instruments, and materials for damage or defects within seven (7) days of delivery to the Project Site.

E. Equipment, instruments, and materials required to be stored on Site prior to installation shall be stored in such a manner to avoid damage or exposure to water, dust, or construction debris.

F. Repair or replace, at no additional cost to the Owner, all equipment, instruments and materials that are defective or damaged during installation, to the satisfaction of the Engineer.

G. Provide in accordance with Division 01 General Requirements.

1.08 SITE CONDITIONS

A. Existing Conditions: per Division 01 General Requirements.

1.09 MAINTENANCE

A. Provide in accordance with Division 01 General Requirements.

B. Provide specific operations and maintenance data in accordance with Section 40 90 00, Instrumentation and Controls General Requirements.

C. Provide the following additional data and information.

1. Configuration and programming manuals for each type of PLC provided.

D. Extra Materials: Furnish as specified below. Make interchangeable with and same material and workmanship as corresponding original parts.

1. One of each type of PLC power supply used.
2. One of each type of I/O module used.

1.10 WARRENTY

PART 2 – PRODUCTS

2.01 GENERAL

A. PLC hardware and programming software shall be by the same manufacturer.

B. All PLCs shall be housed in a control panel as specified per Section 40 95 13, Process Control Panels and Hardware. Power provided to the control panel shall be 120VAC, 60 Hz, single phase.

C. Minimum PLC input/output (I/O) requirements are indicated on the Drawings. Provide at minimum an additional 20% active spare I/O wired to terminal blocks.

D. PLC rack or mounting space provided shall accommodate at minimum 20% spare slots for future expansion.

2.02 PROGRAMMABLE LOGIC CONTROLLERS

A. The PLCs shall be microprocessor based devices and shall be furnished with power supplies, processors, process input and output modules, communication cards as required, rack mounted in the control panel.

1. Power supplies shall be sized to accommodate all analog signals including all spares. The power supply shall accommodate the card's entire I/O capacity (i.e. if 5 analog outputs is required, the power supply shall be sized to handle the full 8 analog outputs of an 8 point card).

B. The PLC shall be capable of stand-alone operation in the event of a SCADA network or SCADA computer failure.

C. The programmable controller system shall use a modular, field expandable design.

D. Modules are defined herein as devices that plug into a chassis or connect to an adjacent module and are keyed to allow installation in only one direction. The design must prohibit upside down insertion or connection of the modules. Modules provided shall be compatible with processor type specified.

E. All hardware of the programmable controller shall operate at an ambient temperature of 0 – 60° C (32 – 140° F), with an ambient temperature rating for storage of (-40) – 85° C ((-40) – 185°F).

F. The programmable controller hardware shall function continuously in the relative humidity range of 5 – 95%, non-condensing.

G. The programmable controller system shall be designed and tested to operate in the high electrical noise environment of an industrial plant.

H. The Programmable controller system shall be UL listed.

I. All module-expandable PLCs and associated modules shall be the following:

1. Processor for new SCADA panels shall be Allen-Bradley Micrologix 1400 series.
2. Discrete input modules used shall be Allen-Bradley Micrologix 1762-IQ16.
3. Discrete output modules used shall be Allen-Bradley Micrologix 1762-OW16.
4. Analog input modules used shall be Allen-Bradley Micrologix 1762-IF4.
5. Analog output modules used shall be Allen-Bradley Micrologix 1762-OF4.

PART 3 – EXECUTION (NOT USED)

END OF SECTION

SECTION 40 95 13

PROCESS CONTROL PANELS AND HARDWARE

PART 1 – GENERAL

1.01 SUMMARY

A. Section Includes

1. The Contractor shall provide all wiring, labor, tools, materials, and equipment necessary to furnish, install, and test control panels and enclosures as specified herein and on the Drawings unless otherwise noted.

2. The Contractor shall furnish, deliver, unload, and power up control panels and enclosures as specified herein and on the Drawings unless otherwise noted.

B. Related Requirements

1. Refer to Division 40 for equipment furnished by other sections but require installation and startup to reflect complete integration of the systems, instrumentation, interlocking, interfacing and installation under this section.

2. Refer to Division 26, Electrical for wiring standards and practices.

C. WORK NOT INCLUDED

1. Programming of the existing plant PLC, HMI and the new Recycle building PLC shall be by others.

1.02 PRICES AND PAYMENT PROCEDURES

A. Measurement and payment requirements: per Division 01 General Requirements.

1.03 REFERENCES

A. Construction of panels and the installation and interconnection of all equipment and devices mounted within shall comply with applicable provisions of the following standards, codes and Regulations:

1. National Fire Protection Association 79, Annex "D" Standards, (NFPA)

2. National Electrical Code, (NEC)

3. National Electrical Manufacturer's Association Standards, (NEMA)

4. American Society for Testing and Materials, (ASTM)

5. Operational Safety and Health Administration Regulations, (OSHA)

6. Underwriters' Laboratory, Inc., (UL)

7. American National Standards Institute, Inc. (ANSI)

8. Factory Mutual (FM)

9. The Instrumentation, Systems and Automation Society (ISA)

10. State and Local code requirements.

11. Where any conflict arises between codes or standards, the more stringent requirement shall apply.

1.04 ADMINISTRATIVE REQUIREMENTS

A. Coordination, Sequencing, and Scheduling: per Division 01 General Requirements.

1.05 SUBMITTALS

A. Submit in accordance with Division 01 General Requirements.

B. Submit detailed information for the process control panels and enclosures in accordance with Section 40 90 00, Instrumentation and Controls General Requirements.

C. In addition to the requirements of Section 40 90 00, the submittals shall include:

1. Prior to submittal to Engineer, Shop Drawings and submittal information shall be thoroughly checked by Contractor to insure compliance with Contract Documents. Contractor shall be Responsible for verifying that all equipment, instruments and materials submitted upon shall fit within available space and maintain specified physical clearances, and that all equipment is compatible with the operation of the overall system. Submittal to the Engineer of Shop Drawings and submittal information implies that the Contractor has reviewed the information and all requirements have been satisfied.

2. Bill of Materials for each control panel, including panel tag name or number, and component description, quantity, manufacturer name and model number for each component used in the fabrication of the control panel. The Bill of Materials shall be keyed to easily correlate the component shown in the Bill of Materials with the component shown on the control panel Equipment Layout Drawings.

3. Manufacturer's descriptive literature (i.e. catalog information or cut sheet) for each component called out on the Bill of Materials, clearly designate the part number with highlights or arrows.

4. Equipment Layout Drawings for each control panel, indicating any deviations from the Contract Documents.

5. Panel communication diagrams for each control panel, indicating any deviations from the Contract Documents.

6. Power wiring diagrams for each control panel, indicating any deviations from the Contract Documents.

7. PLC I/O wiring diagrams, on a module-by-module basis, indicating any deviations from the Contract Documents.

D. If 'shop drawing'-level control panel Drawings were included in the Drawings, Contractor shall have the option to submit a letter/memo (included with copy of Drawings to be used for fabrication) indicating that Panel Shop shall fabricate control panels as specified.

E. Substitutions of equipment or changes to panel design that deviate from the Drawings shall be submitted to Engineer for review prior to fabrication of control panels.

F. Procurement of materials and manufacture of the control panels shall not begin until related submittals have been reviewed and approved by the Engineer.

G. As-Built Drawings

1. After fabrication of the control panels and factory acceptance testing is complete, Panel Shop shall provide Drawings of the control panels, representing the 'as-built' conditions. Submit panel Drawings in AutoCAD DWG and Adobe PDF file formats, on DVD-R media.

2. As-Built Drawings for the SCADA panel shall be submitted with the panel at delivery of the panel to the job site.

H. Operation and Maintenance (O&M) Information

1. Refer to Section 40 90 00, Instrumentation and Controls General Requirements for O&M material requirements. In addition to the requirements in Section 40 90 00, the control panel section of the O&M manuals shall include:

a. Record Drawings of the control panels, updated to reflect the panels after checkout and startup.

b. Installation and operation manuals for all major control panel components, including the network switches, PLCs, I/O modules, communication equipment, etc.

1.06 QUALITY ASSURANCE

A. Provide in accordance with Division 01 General Requirements and as follows:

B. Control Panel Fabricator (hereafter referred to as 'Panel Shop') shall hold a valid UL-508A certification for their panel fabrication facility, and shall have executed a minimum of three (3) Projects of similar scope in the municipal water and wastewater markets in the past five (5) years.

C. Surge protection shall be provided by recognized manufacturer with a minimum of five (5) years' experience in the production of this equipment.

1.07 DELIVERY, STORAGE, AND HANDLING

A. Provide in accordance with Division 01 General Requirements.

B. Coordinate equipment, instrument and material delivery to coincide with the Project schedule. If the delivery schedule of any equipment, instrument or material shall affect the overall Project schedule, notify the Engineer in writing immediately. Include in the written notification documentation from the equipment Supplier indicating the revised delivery schedule and reason for the change.

C. When applicable, coordinate delivery equipment, instruments or materials to be delivered directly to another trade or vendor for installation in a system or control panel provided under another Specification section.

D. Exercise care while loading, unloading and transporting equipment, instruments and materials to avoid damage. Check all equipment, instruments and materials for damage or defects within seven (7) days of delivery to the Project Site.

E. Equipment, instruments, and materials required to be stored on Site prior to installation shall be stored in such a manner to avoid damage or exposure to water, dust or construction debris.

F. Repair or replace, at no additional cost to the Owner, all equipment, instruments and materials that are defective or damaged during installation, to the satisfaction of the Engineer.

1.08 SITE CONDITIONS

A. Existing Conditions: per Division 01 General Requirements.

1.09 MAINTENANCE

A. Extra Materials: Furnished as specified below. Make interchangeable with and same material and workmanship as corresponding original parts.

1. One of each type of surge arrestor

2. 10% spare of each type of fuse used (minimum of 1 spare of each type of fuse used)

3. One of each type of 24VDC communication power supply

4. One of each type of intrinsic safety barrier

1.10 WARRENTY

PART 2 – PRODUCTS

2.01 CONTROL PANEL COMPONENTS

A. The following table contains control panel components and recommended manufacturers for each component.

Control Panel Components	Manufacturer (or approved equivalent)	Comments
Enclosures	Hoffman Hammond Saginaw	Shall be suitable for use in the environments that they will be located (NEMA, NFPA, etc.)
Programmable Logic Controllers (PLCs)		Refer to section 40 94 43, Programmable Logic Controllers
Operator Interface Terminals (OITs)		Refer to section 40 94 43, Programmable Logic Controllers
Wireway	Panduit Hoffman	
DIN Rail	Allen Bradley Phoenix Contact	
Radio Equipment		Match existing Site standards and radio path study as necessary.
Terminal Blocks	Allen Bradley Phoenix Contact Entrelec	Utilize two-tier terminal blocks wherever possible to conserve panel space.

Control Panel Components	Manufacturer (or approved equivalent)	Comments
Terminal Block Fuse Holders	Allen Bradley Phoenix Contact Entrelec	Specify fuse holders with blown fuse indicators.
Circuit Breakers	Square D Allen Bradley	
120VAC Surge Suppressors	Phoenix Contact Square D	
Analog Surge Suppressors	Phoenix Contact Citel	
Media Converters	N-Tron B&B Electronics L-Com	Furnish with DIN rail mount converters as required on the network architecture
Fuses	Bussman Ferraz Shawmut	All glass fuses in control panels shall be fast acting style. Motor circuit protection fuses shall be time delay style.
Control Relays	Allen Bradley Square D Omron	Include all required bases, hardware, etc.
Power Supplies	Sola Phoenix Contact Allen Bradley	Furnish with power supplies sized as required for equipment contained within the enclosures and to supply field equipment connected to the enclosure.
Intrinsic Safety Barriers	Pepperl & Fuchs MTL Phoenix Contact	Discrete barriers shall be 2-channel barriers. Analog barriers shall be two-wire barriers.
Ethernet Switches (Unmanaged)	Moxa B&B Electronics	Switches shall be Furnished with direct-wired low voltage power source within the enclosure.
Ethernet Switches (Managed)	Moxa, B&B Electronics Allen Bradley	All switches shall be Furnished from the same manufacturer.
Fiber Patch Panels	Corning L-Com B&B Electronics	Furnish with panel mount patch panels for incoming fiber optic cables as required
Emergency Power System	Allen-Bradley Sola Phoenix Contact Meanwell	Include UPS in each control panel sized to Furnish with at least 10 minutes of emergency power.

Control Panel Components	Manufacturer (or approved equivalent)	Comments
Panel Heaters	Hammond Hoffman	Furnish with panel heaters for outside control panels where temperature is a concern for electronic components.
Receptacles	Pass & Seymour Hubbel Leviton	Furnish with receptacle for UPS and convenience receptacle in each PLC control panel
Pilot/Status Lights (Push to test)	Allen Bradley General Electric Square D	Color code as follows: Red-Fault, Green-Run
HOR, On/Off, L/R switches and push buttons	Allen Bradley General Electric Square D	Refer to Section 26 27 26, Wiring Devices and Miscellaneous Electrical Equipment. Furnish switches and push buttons with matching nameplate

PART 3 – EXECUTION

3.01 CONTROL PANEL FABRICATION

A. General

1. The control panels shall include programmable logic controller, required I/O modules with chassis (if applicable) and power supply, cables and all appurtenances as specified in this and all applicable sections. The enclosures shall include switches, lights, annunciators and all appurtenances as specified in this and all applicable sections. The panels and miscellaneous materials shall be furnished by one Supplier.

2. All electronic equipment shall be of the manufacturer's latest design, utilizing printed circuitry and epoxy or equal coating to prevent contamination by dust, moisture and fungus. Solid state components shall be conservatively rated for their purpose, to provide reliable performance over ambient atmosphere fluctuations between 0 - 140°F and 0 - 95% relative humidity, non-condensing. The field mounted equipment and system components shall be designed for installation in dusty, humid and slightly corrosive service conditions.

3. Equipment installed in a hazardous area shall meet Class, Group, and Division to comply with the NFPA 70 and CCR, Title 8, Electrical and General Safety Orders.

4. All equipment, cabinets and devices furnished hereunder shall be heavy duty type, designed for continuous industrial service. The PLC system

shall contain products of a single manufacturer, and shall consist of equipment models which are currently in production.

5. Control panel enclosures shall be sized to provide at least 20% spare space, for future expansion, addition of panel components, etc. This shall minimize impact of the addition of unintended equipment during the checkout and startup phases.

6. PLC hardware provided shall accommodate a minimum 20% spare of each I/O type used in the panel, wired to terminals during the fabrication process. This shall minimize impact of unintended I/O requirements added during the checkout and startup phases of the Project.

B. Wiring

1. All interconnecting wiring shall be stranded and shall have 600 volt insulation and be rated for not less than 90 degrees Celsius.

2. Power distribution wiring on the line side of fuses shall conform to Division 26 requirements.

3. Power and low voltage DC wiring systems shall be routed in separate wireways. Crossing of power distribution wiring and control wiring shall be at right angles. Different system wires routed parallel to each other shall be separated by at least 6-inches. Different wiring systems shall terminate on separate terminal blocks. Wiring troughs shall not be filled to more than 60 percent visible fill.

4. All wiring shall terminate onto single-or-double tier terminal blocks, where each terminal is uniquely and sequentially numbered. Direct interlock wiring between equipment will not be allowed. The control panel shall be fabricated with minimum 20% spare terminals. Terminal blocks shall be arranged in vertical rows and separated into groups (power, AC control, DC signal). Terminal blocks shall be the compression screw type. Spring clamp style terminals shall not be accepted.

   a. Discrete inputs and outputs (DI and DO) shall have two (2) terminals per point with adjacent terminal assignments. All active and spare points shall be wired to terminal blocks.

   b. Analog inputs/outputs (AI and AO) shall have a minimum of three (3) terminals per shielded pair. Three (3) terminals shall be provided for direct connection of powered (four wire) loops. Four (4) terminals shall be provided for direct connection of loop powered (two wire) loops. Five (5) terminals shall be provided for connection of analog loops incorporating a local indicator or recorder. One (1) terminal is for shielded ground connections for

cable pairs. Ground the shielded signal cable at the PLC cabinet. All active and spare points shall be wired to terminal blocks.

c. Wire and tube markers shall conform to Division 26 requirements.

d. Only one side of a terminal block row shall be used for internal wiring. The field wiring side of the terminal shall not be within 6-inches of the side panel or adjacent terminal or within 8-inches of the bottom of the panel.

e. Whenever possible, the terminals for field wiring shall be located to reduce the amount of routing through wireway necessary to carry the field wiring to the termination point.

5. All wiring (internal to the panel and field wiring) shall be provided with a 'service loop,' to allow for adjustment of the termination point in the future. Each end of the wire shall include a service loop (3-5 inches), and shall be stored in the associated wireway.

6. All wiring to hand switches, etc., which are live circuits independent of the panel's normal circuit breaker protection shall be clearly identified as such.

7. All wiring shall be clearly tagged and color coded in accordance with the National Electric Code. All tag numbers and color coding shall correspond to the panel wiring diagrams prepared by the Engineer. All power wiring, control wiring, grounding and DC wiring shall utilize different color insulation for each wiring system used. The color coding scheme shall be:

   a. Incoming 120 VAC Hot – Black

   b. 120 VAC Hot Wiring (downstream of panel circuit breaker) – Red

   c. 120 VAC Neutral – White

   d. Ground – Green

   e. DC Wiring – Blue

   f. Intrinsically Safe Wiring - Light Blue

   g. Foreign Voltage – Yellow

C. Control Panel Loss of Power

1. Each control panel containing a PLC shall have an input configured to alarm the operators upon loss of main control panel power. This alarm shall be displayed on the SCADA nodes to alert the operators that attention is required.

D. Control Panel Overcurrent Protection

1. All overcurrent protection devices (circuit breakers, fuses) shall be properly sized to protect the devices and the loads to which they are associated.

2. Circuit Breakers

   a. Circuit breakers in the panel shall be sized to protect the associated equipment, and to provide the necessary power to operate.

3. Fuses

   a. Glass fuses not associated with motor circuit protection shall be specified as fast-acting style. Fuses associated with motor circuit protection shall be specified as time delay style.

E. Lightning/Surge Suppression

1. Lightning/surge suppression shall be provided to protect the control panel and associated equipment from surges on the incoming power circuits, or those induced by lightning strikes and propagated along the signal or power lines connected to the control panels. Surge protection shall be provided by qualified manufacturer complying with requirements in Article 1.04. Surge protection shall be sized properly for its intended purpose.

2. 120VAC surge suppression

   a. The incoming 120VAC power source for the control panel shall be provided with surge suppression in the control panel. Surge suppressors shall be provided with an auxiliary contact, connected to the PLC, to indicate surge suppressor failure. Install surge suppression in strict accordance with manufacturer's recommendations.

3. Analog signal surge suppression

   a. Analog signals connected to equipment or instrumentation that is located outside the building where the control panel is installed shall be supplied with DIN-rail mounted surge suppression in the control panel. Provide surge protection at both ends of the signal cable and mount surge protection as close to the equipment, instrument or termination point as possible. Provide with a minimum of 10kA surge current suppression.

4. Telephone Line and Ethernet surge suppression

   a. Copper-based telephone lines and Ethernet cabling connected to the control panel that leaves the building where the control panel is installed shall be provided with surge suppression in the control

panel. Provide surge protection at both ends of the telephone or Ethernet cabling and mount surge protection as close to the termination point as possible.

F. Selector Switches, Pushbuttons and Pilot Lights

1. All selector switches, pushbuttons and pilot lights required for the enclosures shall be provided in accordance with Section 26 27 26, Wiring Devices and Miscellaneous Electrical Equipment.

G. Uninterruptible Power Supplies

1. Each control panel containing a PLC shall be provided with an uninterruptible power supply (UPS) sized to provide a minimum of ten (10) minutes of power in the event of main control power loss. The UPS shall be provided with relay contact outputs, connected to the PLC, to indicate UPS fault and UPS low battery conditions.

H. Ethernet Switches

1. Ethernet switches shall be configured to accept the number of connections shown on the Drawings.

2. Ethernet switches shall be provided with a minimum of 20% spare RJ-45 ports available for future expansion.

I. Seal Fail and Motor Temperature Relays

1. Pumps, mixers, etc. equipped with proprietary seal fail and motor temperature relays, shall require these relays to be mounted in the SCADA control panel. The seal fail and motor over temperature alarm contacts shall be connected to the PLC as discrete inputs.

J. Intrinsic Safety Barrier Panels

1. Intrinsic safety barriers required for interfacing with equipment and instruments located in a classified area shall be mounted in a panel separate from the control panels.

2. Panels housing intrinsic safety barriers shall be laid out to facilitate separation of hazardous and non-hazardous wiring. Wireway containing hazardous area wiring shall be clearly indicated as such.

K. Equipment Mounting/Arrangement

1. All components shall be mounted in a manner that shall permit servicing, adjustment, testing and removal without disconnecting, moving or removing any other component. Components mounted on the inside of panels shall be mounted on removable plates and not directly to the

enclosure. Mounting shall be rigid and stable unless shock mounting is required by the manufacturer to protect equipment from vibration. Components shall be identified with suitable plastic or metal engraved tags attached with drive pins adjacent to (not on) each component identifying the component in accordance with the Drawings and these Specifications.

2. All exterior panel mounted equipment shall be installed with suitable gaskets, faceplates, etc., required to maintain the NEMA rating of the panel.

3. A minimum of 1-1/2 inches shall be provided between panel wireway and terminal blocks, to insure that wiring can be accessed easily.

4. Maintain manufacturer recommended spacing around panel-mounted equipment, for heating and ventilation concerns.

5. ISA Recommended Practice RP60.3 shall be used as a guide in layout and arrangement of panels and panel mounted components.

L. Nameplates

1. All panels and panel devices shall be supplied with suitable nameplates which identify the panel and individual devices as required. Each device nameplate shall include up to three lines with the first line containing the device tag number as shown on the Drawings, the second line containing a functional description (e.g., Booster Pump No. 1), and the third line containing a functional control description (e.g., Start).

2. Unless escutcheon plates are specified or unless otherwise noted on the Drawings, nameplates shall be 3/32-inch thick, black and white, Lamacoid with engraved inscriptions. The letters shall be black against a white background. Edges of the nameplates shall be beveled and smooth. Nameplates with chipped or rough edges will not be acceptable. Nameplates shall be affixed to the panels using #4-40 threaded stainless steel button head hex screws.

3.02 CONTROL PANEL QUALITY ASSURANCE

A. Panel Shop shall, upon fabrication of the control panels, apply power to each panel, to ensure that panels are wired correctly and all devices contained within the panels 'power up' properly. Panel Shop shall provide written confirmation to the Engineer that 'power up' test was completed.

B. Panel Shop shall complete a point-to-point wiring checkout for all wiring contained in the control panels, and correct any errors or omissions found during that process. Panel Shop shall provide written confirmation to the Engineer that checkout was completed.

C. Panel Shop shall provide advance notice to the Engineer that control panel fabrication is complete, and shall make the control panels available in their facility for completion of the Factory Acceptance Test by the Engineer or System Integrator. Panel Shop shall not ship control panels prior to execution of the Factory Acceptance Test, unless indicated in writing by the Engineer.

3.03 INSTALLATION AND MOUNTING

A. Contractor shall provide all labor, tools, material and equipment required to mount the SCADA panels. Similarly the Contractor shall provide all labor, tools, material and equipment required to modify the existing Main Control Panel (in control room) and the filter control panel (in filter room). The work shall be done as shown on the Drawings and in accordance to manufacturer-recommended mounting practices. The location of control panel shown on the Drawings is approximate only. Exact location shall be as approved by the Owner or Engineer during construction. Obtain in the field all information relevant to the placing of process control Work and in case of any interference with other Work, proceed as requested by the Engineer.

B. All control panels shall be powered up upon installation and all field wiring shall be tested for proper termination. All analog signals shall be simulated for a full scale 4-20ma test.

3.04 STARTUP AND TESTING

A. Contractor shall provide all labor, tools, materials and equipment necessary to assist in the startup and testing of the SCADA system with the Integrator after installation of control panels and instruments, and termination of field wiring to panels is complete. Start up and testing shall be witnessed by the Owner or Owner's representative.

END OF SECTION

This page intentionally left blank

SECTION 43 21 00

VERTICAL TURBINE PUMPS

PART 1 – GENERAL

1.01 SUMMARY

A. Section Includes

1. Provide vertical turbine pumps as shown on the drawings and as specified herein.

B. Related Requirements

1. Section 40 05 13 - Process Pipe and Fittings
2. Section 40 05 15 - Process Pipe Supports
3. Section 40 05 23 - Process Valves and Appurtenances
4. Section 26 29 23 - Variable Frequency Motor Controllers
5. Division 26 - Electrical

1.02 PRICE AND PAYMENT PROCEDURES

A. Measurement and payment requirements: per Division 01 General Requirements.

1.03 REFERENCES

A. Reference Standards

1. American National Standards Institute (ANSI)
2. Hydraulic Institute (HI) Standards
3. Institute for Electrical and Electronics Engineers (IEEE) Standards
4. National Electrical Manufacturers Association (NEMA) Standards
5. National Sanitation Foundation (NSF)

1.04 ADMINISTRATIVE REQUIREMENTS

A. Coordination, Sequencing, and Scheduling: per Division 01 General Requirements.

1.05 SUBMITTALS

A. Submit in accordance with Division 01 General Requirements.

B. Product Data

1. Complete list of all items to be provided including supplier and delivery schedule.

2. Manufacturer's Specifications and product data, including pump curves, required to demonstrate compliance with requirements which shall include complete parts listing showing materials of construction with applicable HI, ANSI, ASTM and other standards.

3. Certified dimension prints showing all details of fabrication, assembly, installation including anchorage details.

4. Data on characteristics and performance of each pump. Data shall include guaranteed performance curves based on actual test data of duplicate units which show compliance with the specified requirements. Variable speed units shall include capacity/head curves and best efficiency point (BEP) for a minimum of five reduced speeds between minimum and maximum speed. Curves shall be plotted capacity versus head, NPSH required, pump efficiency, brake horsepower, and motor horsepower. BEP and all specified operating points shall also be shown. Data at all operating points shall also be tabulated.

5. A list of the manufacturer's recommended spare parts including gaskets, bearings, and seals.

6. Complete wiring diagrams and control schematics.

C. Shop Drawings

1. Shop drawings shall show layout and dimensions of equipment, major components, key alignment locations and locations of bolt holes. Drawings shall also indicate where access points for maintenance and operations are located on the equipment. Drawings shall show critical field dimensions identified by the Manufacturer and obtained by the Contractor. Shop drawings shall include electrical and control wiring diagrams for the equipment including motor wiring diagrams, control wiring diagrams, and grounding requirements.

D. Samples and Mockups

1. None required.

E. Certificates

1. Submit warranty statement.

F. Design Data/Submittals

1. As required under "Product Data" above.

G. Sample Test Reports and Evaluations

1. None required.

H. Manufacturer Instructions

1. Manufacturer's recommended shipping, unloading, storage, installation, testing, operation and maintenance procedures including a list of special tools and equipment required to maintain the units.

2. Complete service manuals including copies of all drawings, description of operation, maintenance data and schedules, and replacement parts lists. Submit manuals in 3-ring binders including table of contents, and heavy duty tab section dividers.

I. Source and Field Quality Control Submittals

1. As required above.

J. Manufacturer Reports

1. Factory test report including test pump curves for the supplied units, following fabrication and prior to shipment, demonstrating compliance with the factory test requirements in Part 3 of this section.

K. Qualification Statements

1. Submit installation lists of installations with contact information demonstrating compliance with Section 1.06 below.

L. Closeout and Maintenance Material Submittals: per Division 01 General Requirements.

1.06 QUALITY ASSURANCE

A. Provide in accordance with Division 01 General Requirements.

B. Qualifications: per Division 01 General Requirements for pumps, and as follows.

C. All pumps and appurtenances furnished under this Section shall be furnished by a single manufacturer who is fully experienced, reputable and qualified in the manufacture of the equipment to be furnished. The equipment shall be designed,

constructed and installed in accordance with the best practices and methods and shall operate satisfactorily when installed as shown on the Drawings.

D. All equipment specified in this section shall be from a manufacturer that has been regularly engaged in the design and manufacturing of vertical turbine pumps for a minimum of 5 years.

E. Pumps are to be engineered and manufactured under a written Quality Assurance program certified to ISO 9001:2000 Quality System Standard. The pumps shall conform to all applicable requirements of ASTM, ANSI, AWWA, and Hydraulic Institute.

F. All equipment shall be designed and built for 24-hour continuous service at any and all points within the specified range of operation, without overheating, without cavitation, and without excessive vibration or strain.

G. The pumping units required under this section shall be complete. All parts shall be so designed and proportioned as to have liberal strength, stability, and stiffness and to be especially adapted for the service to be performed.

H. All working parts of the pump, such as bearings, wearing rings, shaft, and sleeves shall be standard dimensions built to limit gauges or formed to templates, such that parts will be interchangeable between like units and such that the Owner may, at any time in the future, obtain replacement and repair parts.

I. Pre-Construction Testing

1. Pumps should undergo hydrostatic testing and factory performance testing, and pass, prior to shipment to the construction site.

J. Independent Testing

1. Vibration Analysis

K. Certifications

1. All surfaces that come in contact with process water shall be coated with an NSF 61 certified coating.

1.07 DELIVERY, STORAGE, AND HANDLING

A. Provide in accordance with Division 01 General Requirements.

B. Packing, Shipping, Handling, and Unloading

1. Spare parts shall be packed in containers bearing labels clearly designating contents and pieces of equipment for which they are intended.

C. Storage and Protection

1. Contractor shall store all equipment delivered to the site in accordance with manufacturer's instruction. Electrical equipment shall be stored in weatherproof, ventilated enclosures.

2. Pump shall not, under any conditions, be allowed to sit out-of-doors unprotected.

1.08 SITE CONDITIONS

A. Existing Conditions: per Division 01 General Requirements.

1.09 MAINTENANCE

A. Extra Materials: Furnish as specified below. Make interchangeable with and same material and workmanship as corresponding original parts.

1. The manufacturer's recommended spare parts shall be provided prior to equipment start-up. They shall be packaged and identified by name, function, and equipment.

1.10 WARRANTY

A. Provide in accordance with Division 01 General Requirements.

PART 2 – PRODUCTS

2.01 VERTICAL TURBINE WATER PUMPS

A. Description: lineshaft turbine pump with above ground discharge complete with electric motor, baseplate, couplings, and all necessary appurtenances.

Service Conditions: The pump will be used to pump filter backwash water to the raw water mains. Pump materials and design shall be such to meet all regulations for service fluid. The following conditions of service shall be strictly adhered to:

1.	Number of Units:	Two (2)
2.	Name:	P-1 & P-2
3.	Type of Drive:	VARIABLE SPEED
4.	Discharge & Column Pipe:	10 IN.
5.	Design Capacity:	1,000 US GPM
6.	Design Head:	85 FT TDH
7.	Efficiency at Design, minimum:	80%

8.	Rotational Speed, maximum:	1,800 RPM
9.	Impeller Size, minimum:	6.625 IN.
10.	Shut-off Head, minimum:	106 FT
11.	Drive Horsepower, minimum:	30 HP
12.	NPSHR at Design, maximum:	14 FT

B. Materials of Construction: The pump shall be of lead-free construction and be of the following material types, or approved equal:

1.	Bowl:	Cast Iron with glass enamel
2.	Suction Bell:	Cast Iron
3.	Impeller:	Bronze (enclosed) taper locked
4.	Shaft Material:	416 Stainless Steel
5.	Bowl Bearing:	Bronze
6.	Suction Bearing:	Bronze
7.	Column:	Carbon Steel

C. Expected level of quality: Goulds VIT-FFTM, or equal.

D. Pump Construction

1. Bowl Assembly: The bowls shall be flanged type constructed of close grained cast iron conform to ASTM A48, class 30. They shall be free from sand holes, blowholes, or other faults and must be accurately machined and fitted to close tolerances. They shall be capable of withstanding a hydrostatic pressure equal to twice the pressure at rated flow or 1.5 times shut-off head, whichever is greater. The intermediate bowls shall have epoxy lined waterways for maximum efficiency and wear protection. All intermediate bowls shall be of identical design for interchangeability. All the bowls shall be fitted with sleeve type bearings of bronze alloy C89835.

2. Impellers: The impellers shall be constructed from ASTM B584 Silicon Bronze and shall be the enclosed type. They shall be free from defects and must be accurately cast, machined and filed for optimum performance and minimum vibration. Impellers shall be balanced to grade G6.3 of ISO 1940 as minimum. They shall be securely fastened to the bowl shaft with taper locks of C1018 steel.

3. Suction: The suction bell shall be provided with a non-soluble grease packed bronze bearing. A bronze sand collar shall be provided to protect this bearing from abrasives in the pumping fluids. The bearing housing shall have sufficient opening at the bottom for easy removal of the bearing.

4. Shaft: The bowl shaft shall be constructed from ASTM 582 type 416 stainless steel. It shall be precision ground and polished with surface finish better than 40 RMS.

5. All surfaces in contact with process water shall be factory painted with a NSF 61 approved two part epoxy coating.

E. Column Assembly – Open Lineshaft

1. Column Pipe: The column pipe shall be furnished in sections not exceeding a nominal length of 5 ft and shall be connected by threaded coupling. The pipes shall be of ASTM A53 grade B steel pipe and the weight shall be not less than schedule 30. All column flange faces shall be parallel and machined for rabbet fit to permit accurate alignment.

2. Lineshaft: The lineshaft shall be of ASTM A582 type 416 stainless steel ground and polished with surface finish not to exceed 40 RMS. They shall be furnished in interchangeable section not over ten feet in length, and shall be coupled with threaded stainless steel couplings (up to 2-15/16" diameter) machined from solid steel bar. It shall have left-hand thread to tighten during pump operation. The diameter of the shaft and coupling shall be designed in according with AWWA E101 Standard.

3. Bearing: Bearing shall be fluted rubber retained in the centering spider by a shoulder on each end of the bearing.

F. Discharge Head Assembly

1. The discharge head assembly shall be of the high profile type to allow shaft coupled above stuffing box and provided for mounting the driver and support the column and bowl assemblies. It shall be fabricated of steel or cast iron. The above ground outlet shall be flanged to match 10 inch ANSI class 150. It shall have a ½" NPT connection for a pressure gauge.

2. Stuffing Box: The stuffing box shall be cast iron and shall contain a minimum of five rings of packing. It shall have a pressure relief connection. The packing glad shall be a 316 SS split type secured in place with non-corrosive studs and nuts. The bearing shall be C89835 bronze. A rubber slinger shall be secured to the shaft about the packing gland.

G. Motor

1. The motor shall be a heavy duty squirrel cage induction type, inverter duty per NEMA MG1 Part 31, 1,800 RPM vertical hollow shaft motor, with non-reversing ratchet to prevent reverse rotation of the rotating elements. A thrust bearing of ample capacity to carry the weight of all rotating parts plus the maximum hydraulic thrust load under all conditions of operation calculated L10 life shall be no less than 8,800 hours. Provisions shall be made for momentary up thrust equal to 30% of the rated down thrust. The motor shall be premium efficiency, 1.15 service factor, and suitable for use on 230/460 volt, three phase, 60 Hz electric service.

2. An adjusting nut shall be provided at the top of the motor for setting the impeller to bowl running clearances. Motor shall be 30 hp maximum and pump must be nonoverloading on total pump curve.

2.02 PRESSURE GAUGE

A. Provide pressure gauges for local viewing only as shown on the Drawings with the following characteristics.

B. A phosphor bronze Bourdon tube type of measuring element shall have a 4 1/2 inch dial size with approximately 80 divisions and an accuracy of 1/2 one percent of full scale. Dial shall be calibrated in feet and shall include a rezeroing pointer and pointer puller tool.

C. Pressure gauge shall have a 1/2 inch bottom connection and shall be fitted with a snubber of either the restrictive type using a tiny needle valve orifice or the type which uses a small plug of metallic porous sponge.

D. Liquid fill shall be glycerin.

E. Pressure gauge shall include a diaphragm with 316 stainless steel seal and housing. The lower half of the diaphragm seat shall be fitted with a bleed screw.

F. Discharge gauge range shall be 0 to 200 psi.

G. The gauge valve shall be a ball valve. The ball valve shall have a bronze body, stainless steel ball and teflon seats with a spring closing handle.

H. A stainless steel nipple shall be installed below the gauge valve with a double stainless steel strap.

2.03 SOURCE QUALITY CONTROL

A. Provide in accordance with Division 01 General Requirements.

B. Equipment shall be fully tested and checked per manufacturer's standard procedure prior to shipment to the jobsite.

PART 3 – EXECUTION

3.01 FACTORY TESTING

A. All pump tests shall be in accordance with the Hydraulic Institute's Standards. All tests shall be performed at the manufacturer's facility prior to shipment. All test results shall be certified by a registered professional Engineer, and shall be submitted to Engineer for approval prior to shipment.

B. Each bowl assembly shall be tested at the factory for capacity, power requirement, and efficiency at minimum head, rated head, shutoff head or point of discontinuity, and at as many other points as necessary for accurate performance curve plotting. All tests and test reports shall conform to the requirements and recommendations of the Hydraulic Institute Pump Standards. If the pump fails to operate properly or fails to meet the specified conditions or requirements during shop testing, the pump manufacturer shall modify the pumping system and perform additional tests. The pump manufacturer shall submit complete pump test reports, including test arrangement, instrumentation calibration data, test procedures, and test data in curve format. For variable speed units, each pump shall be tested at full speed plus 3 equally spaced speeds between maximum and minimum design conditions.

C. The test results are to be certified by the pump manufacturer.

D. Each pump shall be hydrostatically tested to 1.5 times shutoff head.

E. A torsional natural frequency analysis shall be performed on the rotating assembly consisting of the electric motor rotor, shafting, couplings and impellers. A steady-state forced response analysis shall also be performed by the pump manufacturer. The analysis is to be performed by a licensed Professional Engineer using rotordynamic FEA software. A report shall be provided with the submittal containing the torsional interference diagram and mode shapes. A fatigue diagram using the Goodman criterion must also be provided.

F. All motors shall be tested in accordance with IEEE standards. All test results shall be submitted to the Engineer for approval prior to shipment. Each motor shall be tested at no load running current, high potential, and winding resistance.

G. Pump units shall not be shipped to Site until factory test reports are submitted and approved by Engineer.

H. Engineer and Owner shall be allowed the option of witnessing the test at their expense.

3.02 PREPARATION

A. Demolition/Removal

1. Remove any existing equipment per the Drawings and Specifications.

2. Any and all equipment shall be made available to the owner.

3.03 INSTALLATION

A. The pumping units shall be installed in accordance with the instructions of the manufacturer and as shown on the drawings by the Contractor.

B. Installation shall include furnishing of all required lubricants for initial operation, including startup and six (6) months of operation. The grades and quantities of oil supplied following acceptance shall be as recommended by the pump manufacturer.

3.04 FIELD QUALITY CONTROL

A. Provide in accordance with Division 01 General Requirements.

B. Site/Field Tests and Inspections

1. Each pump furnished under these specifications shall be tested at the factory to verify individual performance. Certified copies of all test reports shall be submitted to the Engineer for approval prior to shipment. Each unit shall be hydrostatically tested in accordance with the Hydraulic Institute Standards.

2. After all pumps have been installed and connected and after inspection, operation, and adjustment has been completed by the manufacturer's representative, the pumping equipment shall be field tested in the presence of the Engineer, for overall wire to water efficiency, to operate without vibration or overheating and for general performance and fitness for the service specified. The Contractor shall provide the labor, piping, equipment and material for conducting the tests. Results of these tests shall be submitted to the Engineer.

3. The quantity of water discharged by the pumps shall be measured by the equipment to be installed.

4. Pumping heads shall be measured by pressure gauges, specially calibrated, and electrical input by the use of suitable instruments. Duration of the tests shall be as determined by the Engineer. This should be conducted at various speeds.

5. If a pumping unit fails to deliver the design capacity under the design pumping heads, or if the wire to water efficiency under the design head fails to reach the efficiency stated in the specification, the Contractor shall, at his own expense, on the written request of the Engineer, replace the motor, impellers, or any other parts, or provide any other required

modifications to improve the unit until the specified capacity and efficiency are fulfilled. Repeat tests if necessary to obtain results acceptable to the Engineer.

6. All vertical pumps and drives shall be field balanced by a qualified technician using portable balancing equipment. The amplitude of vibration measured near the top of the drive shall not exceed 1.5 mils after final balancing. All balancing shall be done in the presence of the Engineer. The qualified technician shall submit a report to the Engineer showing final test results. The pump manufacturer shall be responsible for making all arrangements for field balancing.

7. Field verify each unit is performing within the performance testing range as demonstrated during the factory testing. Calibrated external flowmeter(s), power meter(s), and pressure gauge(s) shall be used to demonstrate that the pump meets the design criteria. Pumping heads shall be measured by pressure gauges, specially calibrated, and electrical input by the use of suitable instruments. Duration of the tests shall be as determined by the Engineer.

8. At the discretion of the Owner or his representative, an independent vibration analysis may be conducted on each of the vertical turbine pumps. This testing shall be open to the Contractor and the manufacturer.

9. Field Vibration Testing: Vibration shall be measured in accordance with ISO 10816 for all pumps. An independent testing laboratory specializing in this work, retained by the Contractor but acceptable to the Engineer, shall perform the measurements and shall submit the results directly to the Engineer. The vibration specialist shall hold a current Level III certificate from the Vibration Institute and shall be fully equipped to provide continuous velocity and displacement values for all rotating equipment installed under the requirements of this section. Vibration testing equipment shall include sufficient calibrated pressure and flow monitoring devices to determine pump operating conditions as well as vibration levels. RMS vibration velocity on any component shall not exceed the limits established by for the appropriate system in the ANSI/HI 9.6.4 Centrifugal/Vertical Vibration when operating within the manufacturer's Preferred Operating Region. Vibration testing shall be conducted on each pump prior to placing it into service.

3.05 MANUFACTURER FIELD SERVICES

1. The supplier shall provide a factory trained and certified field representative for a minimum of two (2) eight-hour days excluding travel time to inspect the installation, conduct training, test the system and make any necessary adjustments to verify and insure proper system operation.

2. The supplier shall submit a written report certifying satisfactory installation and operation.

3. Any defects in the equipment or failure to meet the requirements of the Specifications shall be promptly corrected by the Manufacturer.

4. Performance Guarantee – If the performance measured during startup does not meet the pump manufacturer's submittal, equipment(s) shall at the owner's option be removed and the manufacturer shall be responsible for all costs associated with the design, installation, loss of pump station operation, and any and all other damages associated with the manufacturers failure to meet submitted performance data.

3.06 FINISHES

A. In accordance with Section 09 90 00.

B. Stainless steel, galvanized steel, and nonferrous surfaces shall not be painted.

C. Touch-Up Painting: Factory painted items requiring touching up in the field shall be thoroughly cleaned of all foreign material and shall be primed and top-coated with the manufacturer's standard factory finish.

D. Exposed Ferrous Surfaces: Exposed ferrous surfaces shall be painted with two coats of enamel paint conforming to SSPC Paint 21. Factory primed surfaces shall be solvent-cleaned before painting. Surfaces that have not been factory primed shall be prepared and primed with one coat of SSPC Paint 25 or in accordance with the enamel paint manufacturer's recommendations

3.07 STARTUP & COMMISSIONING

1. Provide in accordance with Division 01 General Requirements.

3.08 CLOSEOUT ACTIVITIES

A. Provide in accordance with Division 01 General Requirements.

END OF SECTION

SECTION 43 21 40

SUBMERSIBLE PUMP

PART 1 – GENERAL

1.01 SUMMARY

A. Section Includes

1. Submersible pumps as shown on the Drawings and specified herein.

B. The Contractor shall provide all labor, materials, equipment, and incidentals to furnish, install, startup, and test two wet well submersible pumps as shown on the Drawings and specified herein.

1.02 PRICE AND PAYMENT PROCEDURES

A. Measurement and payment requirements: per Division 01 General Requirements.

1.03 REFERENCES

A. Reference Standards

1. American Bearing Manufacturers Association (ABMA)
2. American Gear Manufacturer' Association (AGMA)
3. American National Standards Institute (ANSI)
4. American Society for Testing Materials (ASTM)
5. Standards of the American Water Works Association (AWWA)
6. Institute of Electrical and Electronic Engineers (IEEE)
7. Standards of the Hydraulic Institute (HI)
8. National Electric Code (NEC)
9. Standards of the National Electrical Manufacturers Association (NEMA)
10. ISO 9001:2000

1.04 ADMINISTRATIVE REQUIREMENTS

A. Coordination, Sequencing, and Scheduling: per Division 01 General Requirements.

1.05 SUBMITTALS

A. Submit in accordance with Division 01 General Requirements.

B. Product Data

1. Complete list of all items to be provided including Supplier and delivery schedule.

2. Manufacturer's Specifications and product data required to demonstrate compliance with requirements which shall include complete parts listing showing materials of construction with applicable HI, ANSI, ASTM and other standards.

3. Certified dimension prints showing all details of fabrication, assembly, installation including anchorage details.

4. Data on characteristics and performance of each pump. Data shall include guaranteed performance curves based on actual test data of duplicate units which show compliance with the specified requirements. Variable speed units shall include capacity/head curves and best efficiency point (BEP) for a minimum of five reduced speeds between minimum to maximum speed. Curves shall be plotted capacity versus head, NPSH required, pump efficiency, brake horsepower, and motor horsepower. BEP and all specified operating points shall also be shown. Data at all operating points shall also be tabulated.

5. A list of the manufacturer's recommended spare parts including gaskets, bearings, and seals.

6. Complete wiring diagrams and control schematics.

C. Shop Drawings

1. Submit drawing detailing the complete pump/rails/support assembly.

D. Samples and Mockups

1. None required

E. Certificates

1. Submit warranty statement.

F. Design Data/Submittals

1. As required under "Product Data" above.

G. Sample Test Reports and Evaluations

1. None required.

H. Manufacturer Instructions

1. Manufacturer's recommended shipping, unloading, storage, installation, testing, operation and maintenance procedures including a list of special tools and equipment required to maintain the units.

2. Complete service manuals including copies of all drawings, description of operation, maintenance data and schedules, and replacement parts lists. Submit manuals in 3-ring binders including table of contents, and heavy duty tab section dividers.

I. Source and Field Quality Control Submittals

1. As required above.

J. Manufacturer Reports

1. Factory test report including test pump curves for the supplied units, following fabrication and prior to shipment, demonstrating compliance with the factory test requirements in Part 3 of this section.

K. Qualification Statements

1. Submit installation lists of installations with contact information demonstrating compliance with Section 1.06 below.

L. Closeout and Maintenance Material Submittals per Division 01 General Requirements.

1.06 QUALITY ASSURANCE

A. Provide in accordance with Division 01 General Requirements.

B. All equipment specified in this section shall be from a single Manufacturer that has been regularly engaged in the design and manufacturing of submersible pumps for a minimum of 5 years.

C. Pumps are to be engineered and manufactured under a written Quality Assurance program certified to ISO 9001:2000 Quality System Standard. The pumps shall conform to all applicable requirements of ASTM, ANSI, AWWA, and Hydraulic Institute.

D. All equipment shall be designed and built for 24-hour continuous service at any and all points within the specified range of operation, without overheating, without cavitation, and without excessive vibration or strain.

E. The pumping units required under this section shall be complete. All parts shall be so designed and proportioned as to have liberal strength, stability, and stiffness and to be especially adapted for the service to be performed.

1.07 DELIVERY, STORAGE, AND HANDLING

A. Provide in accordance with Division 01 General Requirements and manufacturer instructions.

1.08 SITE CONDITIONS

A. Provide in accordance with Division 01 General Requirements

B. Provide as shown on the Drawings.

1.09 MAINTENANCE

A. Provide spare parts, special tools, and operations and maintenance instructions as specified elsewhere in this Specification and in Division 01 General Requirements.

1.10 WARRANTY

A. Provide in accordance with Division 01 General Requirements.

PART 2 – PRODUCTS

2.01 GENERAL

A. All pumps shall be vertically-oriented, submersible, capable of continuous operation in a fully submerged condition and permanently connected to outlet pipes as shown on the Drawings. Pump shall be of submersible construction and shall be capable of normal, continuous operation when flooded in water to a depth of 50 feet or greater.

2.02 SUBMERSIBLE PUMPS

A. Underdrain Pumps (P-3 & P-4):

1. Discharge Pipe: 2 inch NPT integral vertical discharge

2. Solids: capable of handling effluent containing non-abrasive ¾" maximum solids.

3. Motor Horsepower: 1/3

4. Operating Conditions

a. The pump must meet all of the following operating conditions:

1)	Design Point	40 GPM @ 18 ft
2)	Maximum Pump speed	1,750 rpm
3)	Minimum Efficiency	54%

B. Expected level of quality: Goulds 2ED52B0EA, or equal.

C. Pump

1. Casing: The casing shall be cast from ASTM A48 class 30 gray cast iron of sufficient thickness to withstand 1.5 times the shut off pressure generated by the largest impeller available for this model in accordance with current revision of the Hydraulic Institute Standards. The discharge connection shall be a standard 2 inch NPT suitable for direct connection to the station piping, without the use of any external fittings or adapters for vertical orientation of the discharge direction. Integral feet of cast iron shall be made a part of the casing for accurately positioning the pump suction opening at the correct elevation off the sump floor for good pump down capability.

2. Mechanical Shaft Seals: The motor shall be protected by two independent sets of mechanical shaft seals mounted in tandem on the pump shaft. The lower mechanical seal shall be constructed of silicon carbide vs. silicon carbide sealing faces. The upper mechanical seal shall be constructed of carbon vs. ceramic faces. Each set (upper and lower) shall be tensioned by an independent spring system constructed of series 300 stainless steel metal components and BUNA-N elastomers. The mechanical seals shall be located in a completely isolated seal oil chamber which will provide lubrication for the seal faces while simultaneously acting as an isolation zone for the stator chamber. This seal oil chamber shall be provided with an internally mounted moisture sensing probe to detect moisture intrusion into this lower chamber of the pump. The moisture sensing probe must be connected to a seal fail circuit (moisture detection circuit) in the control panel. The seal fail circuit should have an alarm light, audible alarm or both. This seal fail alarm signals that service is required.

3. Impeller: The impeller shall be semi-open with ejector (pump out) vanes on the top of the impeller for protection of the lower mechanical seal and hydraulic balance. Due to design, only single plane spin balancing shall be required for smooth operation. The impeller shall be threaded to the solid series 400 stainless steel shaft. All impellers shall be secured by a thread-locking feature which will prevent the impeller from loosening during short periods of reverse rotation as might occur when rotation direction is being verified outside the installation.

4. Major Casting Materials: The impeller, casing, bearing/seal housing and motor cover shall be of ASTM A48 Class 30 high quality cast iron for

strength and long life. Bronze impeller shall be cast from ASTM B584 UNS C87600 when ordered as an option.

5. Shaft: Corrosion resistant stainless steel threaded design, AISI 400 stainless steel. Locknut to guard component damage on accidental reverse rotation.

6. Bearings: Upper and lower heavy duty steel ball bearings.

7. Hardware: 300 series stainless steel

8. Corrosion Protection: The pump/motor shaft wetted-end shall be series 400 stainless steel. Both inner and outer surfaces of cast iron shall be electrocoat-painted with thermo-setting Acrylic Enamel baked at 400° F., after castings are completely machined.

9. Power Cable: The power cable shall be sealed at the motor end as it enters the motor casing by a two part barrier to moisture intrusion. The barrier shall include compression of the oil and chemical resistant grommet and an epoxy poured isolated conductors within the jacketed cable. The insulation shall be removed from the individual conductors and the epoxy shall be allowed to form a leak-proof seal against wicking of the power cable between the outer jacket and the insulation of the individual conductors. The outer jacket of the power cord shall be oil resistant and water resistant. The power cable shall be rated for NEC severe service "S", type "SJTOW" or "STOW". The heat and seal sensor cable shall be NEC severe service "S", type "SJTOW". Cord length sufficient to reach termination point as shown on the Drawings.

D. Motors

1. The integral motor shall be completely sealed from the environment by use of circular cross section O-rings accurately fitted into machined grooves which shall provide designed compression of metal to metal fits. Designs which require a specific torque on the casing bolts or which require rectangular gaskets or sealing rings shall not be allowed. The motor shall be rated for continuous duty under full nameplate load while at full submergence in the station. The motor shall be provided at the specific site conditions of 230V at 60 Hz. Single phase motors shall be capacitor-start. All single phase motors shall be provided with thermal protection. Single phase motors shall have an on winding sensor with automatic reset. Motors shall also be equipped with an on winding thermal sensor connected via control cable to reset devices in the control panel. The stator winding shall be open type with class F insulation suitable for operation in clean dielectric oil for efficient heat transfer and lubrication of the ball bearings. The stator shall be a register fit into the bearing housing to ensure positive alignment, and bolted for ease of serviceability. The motor shall be provided with ball type anti-friction bearings which shall support

the heavy duty rotor shaft and handle all radial and axial loads imposed by the impeller while limiting shaft deflection at the mechanical seal faces. The ball bearings shall be designed for a B-10 life of 30,000 hours minimum. The motor shall be designed and tested to withstand an 18 day locked-rotor operation without damage.

2. Motor shall be NEMA 48 Frame.

3. Overload Protection: Provide thermal overload protection with automatic reset.

4. Insulation: Class F

5. Agency Listing: Underwriters Laboratories or Factory Mutual

6. Duty: Continuous and intermittent

7. Thermal switches: Provide one thermal switch for each stator phase winding to detect motor over-temperature.

8. Shop Test: Use NEMA report of test form to report tests conducted in accordance with AIEE Test Code as specified in the ANSI Standard C50 for Rotating Electrical Machinery.

E. Controls

1. The control panel shall be a NEMA 4X fiberglass enclosure with a hinged door with lockable stainless steel latch and stainless steel hardware.

2. Panel mount switches shall include power, hand-off-automatic (HOA) pump selection and alarm silence.

3. The power switch shall interrupt the 230V, 60 Hz line power.

4. Panel mount indicator lights shall include status for pumps, floats and general fault.

5. The panel shall include a top mount alarm light (high intensity, flashing red) and an alarm horn. Both light and horn shall be corrosion proof.

6. Terminal blocks shall be included for connecting power, motor leads, monitoring and control wires.

7. Furnish relays for each pump to detect seal failure and motor over-temperature. Provide separate dry contacts for seal failure and motor over temperature. The alarm contacts shall be rated for 240VAC, 3A max.

8. Include non mercury, foam filled, narrow angle floats for pump control.

F. Lubrication

1. All lubrication fittings shall be readily accessible from the outside without the necessity of removing covers, plates, housings, or guards.

G. Nameplates

1. Each pump and motor shall be furnished with a stainless steel nameplate (with embossed data) securely mounted to the body of the equipment. As a minimum, the nameplate for the pumps shall include the manufacturer's name and model number, serial number, rated flow capacity, head and speed. As a minimum, nameplates for motors shall include the manufacturer's name and model number, serial number, horsepower, speed, input voltage, amps, number of cycles, power and service factors.

H. Spare Parts And Special Tools

1. Provide spare parts and special tools prior to startup and in clearly labeled packaging, in a location determined by the Owner.

2. Provide the following spare parts.

3. Complete Set of gaskets, O-rings, and lip seals

4. Spares of any additional parts subject to wear and/or as recommended by the Manufacturer.

5. Provide one set of all special tools required for the normal operation and maintenance of the pumps.

2.03 ACCESSORIES

A. Floats

1. Control switch: mechanically activated, narrow angle, designed to activate pump control panels or alarms. PVC housing for use in liquids up to 140°F. Cord sufficient to reach termination point as shown on the Drawings.

B. Rail System And Discharge Pipe Assembly

1. Guide Rails: 1-1/2" O.D. Schedule 40 316 stainless steel tubing, length required to raise pumps to the surface as shown on the Drawings.

2. Base, cross braces and brackets: 316 stainless steel

3. Guide rail connectors: plastic

4. Lifting cable: 3/16" 316 stainless steel, length sufficient to raise pumps to the surface as shown on the Drawings.

5. Discharge pipe assembly: brass quick disconnect assembly with o-ring seal, tee, union and 316 stainless steel pipe nipple, schedule 40 316 stainless steel discharge pipe.

C. Portable Davit Crane

1. The portable davit crane shall be a Thern model 5122M3SS, or equal.

2. The base shall be a Thern pedestal base model 522SS, or equal.

3. The wire rope assembly shall be Thern WS19-28NO, or equal.

2.04 SOURCE QUALITY CONTROL

A. Provide in accordance with Division 01 General Requirements.

PART 3 – EXECUTION

3.01 FACTORY TESTING

A. All pump tests shall be in accordance with the Hydraulic Institute's Standards. All tests shall be performed at the manufacturer's facility prior to shipment. All test results shall be certified by a registered professional Engineer, and shall be submitted to Engineer for approval prior to shipment.

B. Each pump shall be hydrostatically tested to 1.5 times shutoff head.

C. All motors shall be tested in accordance with IEEE standards.

3.02 INSTALLATION

A. Each pump and motor shall be installed in accordance with the written instructions of the manufacturer and under the direct supervision of the manufacturer's representative. Correct installation and assembly of the pumps and other equipment shall be the Contractor's responsibility and shall be in accordance with the Drawings and with the manufacturers' installation instruction manual. The Contractor shall furnish all bolts, shims, tools, and other devices necessary for installing the pumping units. The manufacturer's representative(s) familiar with the equipment being installed shall supervise the handling, installation, start-up, and testing of the equipment.

B. A certificate from the pump manufacturer shall be provided stating that the installation of the pumping equipment is satisfactory, that the equipment is ready

for operation, and that the operating personnel have been suitably instructed in the operation, lubrication and care of each type unit provided.

C. Installation shall include furnishing of all required lubricants for initial operation, including startup and six (6) months of operation. The grades and quantities of oil supplied following acceptance shall be as recommended by the pump manufacturer.

3.03 TESTS

A. After installation of the pumping units and appurtenances is complete, test pumping equipment for proper operation. The Contractor shall make arrangements to have the Manufacturer's representatives present during each test. Notify Engineer one week prior to test, and confirm with Engineer 24 hours prior to test. Each pumping unit shall be given a running field test in the presence of the Engineer and Manufacturer's Representative for a minimum of 2 hours. Each pumping unit shall be operated at its rated capacity and the design points specified herein. Throttle discharge valves or run multiple pumps simultaneously to achieve specified heads. The Contractor shall provide an accurate and acceptable method of measuring the discharge flow and suction and discharge heads. Use of new, calibrated, and tested station flow meter and pressure gauges is acceptable. Tests shall assure that the units and appurtenances have been installed correctly, that the assembly is free from undue stress imposed by the piping or mounting bolts, that there is no objectionable heating, vibration, or noise from any parts, and that all manual and automatic controls function properly. If any deficiencies are revealed during any tests, such deficiencies shall be corrected and the tests shall be re-conducted.

B. Provide Field Test Booklets for each unit showing all field tests performed to adjust each component and all field tests performed to prove compliance with the specified performance criteria, upon completion and testing of the installed system. Each test report shall indicate the final position of controls, and all data gathered during testing and shall be signed by the Manufacturer's representative, Contractor, and Engineer.

3.04 FIELD QUALITY CONTROL

A. Provide in accordance with Division 01 General Requirements.

3.05 MANUFACTURER'S FIELD SERVICES

A. Provide the services of a factory trained service representative to assist in the installation, start-up, and testing of the equipment, and to perform training to treatment facility personnel in the operation and maintenance of the equipment. A factory-trained representative shall be present during testing of all pumps.

3.06 FIELD PAINTING

A. In accordance with Section 09 90 00.

B. Stainless steel, galvanized steel, and nonferrous surfaces shall not be painted.

C. Touch-Up Painting: Factory painted items requiring touching up in the field shall be thoroughly cleaned of all foreign material and shall be primed and top-coated with the manufacturer's standard factory finish.

D. Exposed Ferrous Surfaces: Exposed ferrous surfaces shall be painted with two coats of enamel paint conforming to SSPC Paint 21. Factory primed surfaces shall be solvent-cleaned before painting. Surfaces that have not been factory primed shall be prepared and primed with one coat of SSPC Paint 25 or in accordance with the enamel paint manufacturer's recommendations.

3.07 STARTUP & COMMISSIONING

A. Provide in accordance with Division 01 General Requirements.

3.08 CLOSEOUT ACTIVITIES

A. Provide in accordance with Division 01 General Requirements.

END OF SECTION

This page intentionally left blank

LOWELL REGIONAL WATER UTILITY
LOWELL, MASSACHUSETTS

RESIDUALS HANDLING
FACILITIES UPGRADE
SCADA PANEL

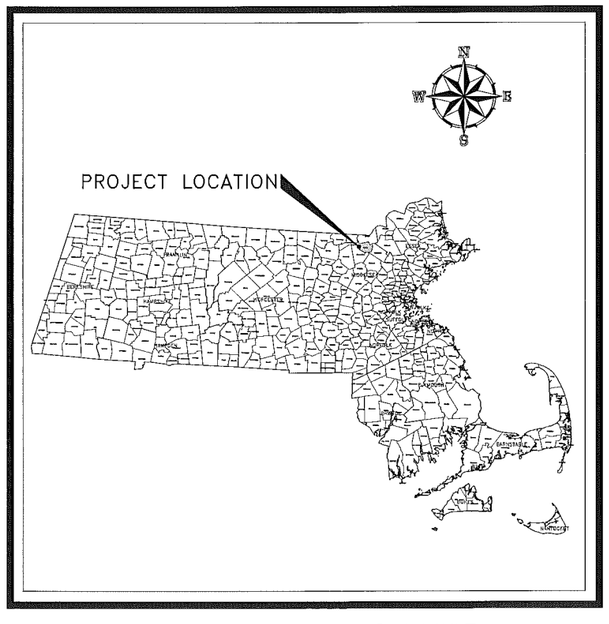

PROJECT LOCATION MAP

50 0 50 100
scale mile

PROJECT NO. 227251.30

ISSUED FOR BID

SEPTEMBER 2014

WOODARD & CURRAN

40 Shattuck Road Suite 110 | Andover Massachusetts 01810
866.702.6371 | www.woodardcurran.com

COMMITMENT & INTEGRITY DRIVE RESULTS

SITE LOCATION MAP

SCALE: 1" = 2000'

SOURCE
U.S.G.S. QUADRANGLE, LOWELL, MASSACHUSETTS
1987, 15 MINUTE SERIES

COMMONWEALTH OF MASSACHUSETTS
JONATHON H. GRANT
CONTROL SYSTEMS
NO. 49900
PROFESSIONAL ENGINEER

\\andover\Projects\227251 Lowell MA - PDF 2012\wip\30 - Residuals Design\Cad Drawings\G&C\227251.30-I200.dwg, Sep 16, 2014 - 10:11am

ELECTRICAL SYMBOLS

	LIMIT SWITCH NORMALLY CLOSED
	LIMIT SWITCH HELD CLOSED
	LIMIT SWITCH NORMALLY OPEN
	LIMIT SWITCH HELD OPEN
	FLOAT SWITCH NORMALLY OPEN
	PRESSURE SWITCH NORMALLY OPEN
	TEMPERATURE SWITCH NORMALLY OPEN
	TIME SWITCH (DROP OUT) NORMALLY OPEN
	TIME SWITCH (PULL IN) NORMALLY OPEN
	FLDW SWITCH NORMALLY OPEN
	PUSH BUTTON NORMALLY CLOSED
	PUSH BUTTON NORMALLY OPEN
OFF ON OX	SELECTOR SWITCH 2 POSITION
H A XOO OOX	SELECTOR SWITCH 3 POSITION
H L O A XOOO OXOO OOOX	SELECTOR SWITCH 4 POSITION
	CONTACT NORMALLY CLOSED
	CONTACT NORMALLY OPEN
	SWITCH
R	PILOT LIGHT (W/ LENS COLOR)
	SOLENOID
	COIL
	HORN
	CIRCUIT BREAKER
	FUSE
	CHASSIS GROUND
	THERMAL OVERLOAD
	120 VAC RECEPTACLE
	TRANSFORMER
	TRANSFORMER
	CURRENT TRANSFORMER
	THERMOCOUPLE
	RTD SENSOR
	MOTOR
	MUSHROOM PUSH BUTTON NORMALLY OPEN
#	REVISION REFERENCE
#	ITEM REFERENCE
#	NOTE REFERENCE
######	TERMINAL NUMBER
	BREAK
	PANEL WIRING
	FIELD WIRING
	SHIELDED CABLE
	WIRES CROSSING
	WIRES CONNECTING
	3 PHASE HEATER (DELTA)
	3 PHASE HEATER (WYE)
	3-POLE CIRCUIT BREAKER
	MOTOR PROTECTOR
	3-POLE CONTACTOR
	3-POLE DISCONNECT

PANEL NOTES

1) THE MAIN CONTROL PANEL MUST HAVE A POCKET INSIDE THE PANEL LARGE ENOUGH TO STORE A COMPLETE SET OF SYSTEM DIAGRAMS, AND DRAWINGS.

2) ANALOG CABLES SHALL BE 2 CONDUCTOR WITH SHIELD. BELDEN #8760 OR EOUAL.

3) LEAVE FREE SPACE ABOVE PLC FOR VENTILATION.

4) ALL WIRES SHALL BE IDENTIFIED AS SPECIFIED BY THE NATIONAL ELECTRICAL CODE HANDBOOK AND THE FOLLOWING:

POWER DISTRIBUTION WIRES........BLACK
NEUTRAL WIRES............................WHITE
AC CONTROL CIRCUIT WIRES........RED
DC CONTROL CIRCUIT WIRES........BLUE
DC COMMON WIRES.......................WHITE W/BLUE STRIPE
GROUND WIRES.............................GREEN W/YELLOW STRIPE
WIRES THAT MAY REMAIN............ORANGE
ENERGIZED WHEN THE MAIN
DISCONNECT IS IN THE OFF
POSITION

5) ALL WIRE SHALL BE SIZED IN ACCORDANCE WITH NEC CODES. SINGLE CONDUCTORS SHALL BE STRANDED COPPER WITH THWN INSULATION, RATED FOR 600 VAC, AND UL LISTED AS MTW, UNLESS NOTED OTHERWISE. MINIMUM CONDUCTOR SIZE SHALL BE #14AWG. #16 AWG MAY BE USED ONLY FOR THE INDIVIDUAL WIRES CONNECTING DIRECTLY TO AN I/O TERMINAL ON THE PLC SWING ARM. THE HOT AND NEUTRAL CONDUCTOR SUPPLYING EACH SWING ARM SHALL REMAIN #14 AWG. GROUND CONDUCTOR SIZE SHALL BE AS INDICATED ON THE DRAWINGS. WHERE NOT INDICATED, THEY SHALL BE #14 AWG OR LARGER.

6) ALL PLC CHASSIS, PANEL DOORS, SIDE PANELS, BACK PANELS AND GROUND BUS SHALL BE BONDED TOGETHER WITH WIRES SIZED AS SHOWN ON THE DRAWING.

7) ALL WIRES SHALL BE TAGGED AT EVERY TERMINATION POINT. SHORT WIRE LENGTHS, (LESS THAN 8") WHERE THE ENTIRE CONDUCTOR IS VISIBLE MAY BE TAGGED AT JUST ONE END. WIRE LABELS FOR WIRES SMALLER THAN NO. 4. SHALL BE VINYL, SELF ADHESIVE, WRAPAROUND, WITH MACHINE PRINTED NUMBERS AND LETTERS. WIRE SIZES NO. 4 AND LARGER AND MULTI CONDUCTOR CABLES SHALL BE MARKED WITH ONE-PIECE, NYLON LOCKING MACHINE PRINTED MARKER TIES EOUAL TO PANDUIT PLM SERIES. WIRE TAG NUMBER SHALL BE AS INDICATED ON THE DRAWINGS

8) DO NOT ROUTE ANY COMMUNICATION CABLES IN WIREWAYS WITH 120 VAC WIRING. ROUTE ALL THESE CABLES AWAY FROM 120 VAC WIRING. WHERE 120 VAC CONDUCTORS MUST BE CROSSED, DO SO AT RIGHT ANGLES AND PROVIDE AT LEAST 1" SEPARATION.

9) NO MORE THAN TWO WIRES SHALL BE CONNECTED TO ANY ONE TERMINAL. TERMINAL BLOCKS SHALL HAVE A SAFETY COVER OR BE FINGER SAFE TO PROTECT PERSONNEL FROM SHOCK. ALL TERMINAL BLOCKS SHALL BE MOUNTED ON DIN RAILS. MISCELLANEOUS SEPARATORS, TOP JUMPER BARS, SIDE JUMPER BARS, MACHINE PRINTED TERMINAL BLOCK TAGS, FASTENERS, BRACKETS FOR RAISING 35MM RAIL, ETC. SUPPLY ALL HARDWARE NEEDED TO PROVIDE A COMPLETE TERMINAL STRIP ASSEMBLY.

10) ALL TERMINAL STRIPS SET BETWEEN WIREWAYS SHALL BE RAISED TO FACILITATE WIRING. INSTALL END BARRIERS FOR EACH STYLE OF TERMINAL. INSTALL END STOPS ON EACH SECTION OF TERMINALS OR RELAYS. USE MACHINE PRINTED TAGS TO MARK TERMINAL STRIPS. WHEREVER POSSIBLE, MAKE ALL TERMINAL BLOCK CONNECTIONS FOR THE PANEL WIRING ON THE TOP OR RIGHT SIDE OF THE TERMINAL STRIP AND LEAVE THE BOTTOM OR LEFT SIDE FREE FOR FIELD TERMINATIONS, UNLESS NOTED OTHERWISE.

11) PLASTIC NAMEPLATES SHALL BE ENGRAVED TYPE. EITHER PAINT FILLED ENGRAVINGS OR 2 COLOR LAMINATIONS ARE ACCEPTABLE.

12) ALL OPERATOR CONTROL DEVICES (BUTTONS, SWITCHES, METERS, DISPLAYS, ETC.) SHALL HAVE NAMEPLATES.

13) PANEL BUILDER SHALL PROVIDE ENGINEER WITH A SET OF MARK UP DRAWINGS. THESE SHALL BE COMPLETE, ALLOWING ENGINEER TO PRODUCE A SET OF "AS BUILT" DRAWINGS SHOWING ALL WIRE NUMBERS WITHIN THE PANEL AND THE DEVICE TERMINAL NUMBERS TO WHICH THEY CONNECT. REQUIRED INFORMATION SHALL INCLUDE BUT NOT BE LIMITED TO:
    A. ALL WIRE TAG NUMBERS.
    B. TERMINAL CONNECTION POINTS FOR POWER AND NEUTRAL FEEDS.
    C. ANY DEVIATIONS FROM THE EOUIPMENT LOCATIONS SHOWN ON THE DRAWINGS. PRIOR APPROVAL SHOULD BE OBTAINED BEFORE MAKING SUCH CHANGES.

14) PANEL BUILDER SHALL SAVE ALL MATERIAL DATA SHEETS AND LITERATURE. WHERE PRODUCT DATA IS PROVIDED ON THE PACKAGE, MAKE A CLEAR COPY OF THE DATA AND INCLUDE WITH OTHER DATA SHEETS. ALL OF THIS MATERIAL SHALL BE RETURNED DIRECTLY TO ENGINEER UPON OELIVERY OF THE PANEL.

15) EQUIPMENT LOCATIONS SHALL BE AS SHOWN ON THE DRAWINGS. THE PANEL BUILDER SHALL NOTIFY ENGINEER OF ANY PHYSICAL CONFLICTS OR OTHER PROBLEMS THAT COULD CAUSE PROBLEMS WITH THE INSTALLATION OR OPERATION OF THE PANEL BEFORE ASSEMBLING THE PANEL. RESOLUTION OF SUCH CONFLICTS SHALL BE APPROVED BY ENGINEER PRIOR TO PANEL ASSEMBLY.

16) ALL EOUIPMENT SHALL BE PROVIDED AS SHOWN ON THE BILL OF MATERIALS INCLUDED IN THIS DRAWING PACKAGE. ANY DEVIATION FROM THE BILL OF MATERIALS MUST BE SUBMITTED FOR APPROVAL IN WRITING TO THE ENGINEER PRIOR TO FABRICATION.

CROSS REFERENCING ON WIRING SCHEMATICS SHALL BE FOUR DIGITS ENCLOSED WITH BRACKETS AS SHOWN.
[0733]
FIRST TWO DIGITS INDICATE SHEET NUMBER — SECOND TWO DIGITS INDICATE LINE NUMBER

FIELD NOTES

1) CARE SHALL BE TAKEN WHILE CONDUIT ENTRY PENETRATIONS ARE MADE INTO ENCLOSURE TO AVOID SCATTERING OF DRILL CHIPS & KNOCK-OUT SLUGS. PENETRATIONS SHALL BE DE-BURRED AND DEBRIS REMOVED. ALL CONDUIT ENTRIES INTO ENCLOSURE SHALL BE SEALED FROM LIOUIDS & CDNTAMINANTS. ENTRIES OVER CRITICAL COMPONENTS, SUCH AS PLCs AND DRIVES SHALL BE AVOIDED.

2) ANALOG CABLES SHALL BE 2 CONDUCTOR WITH SHIELD. BELDEN #8760 OR EOUAL.

3) ALL WIRES SHALL BE IDENTIFIED AS SPECIFIED BY THE NATIONAL ELECTRICAL CODE HANDBOOK AND THE FOLLOWING:

460 VAC	120/208 VAC
(L1)........BROWN (L2)........ORANGE (L3)........YELLOW (NEUT)....GREY	(L1)........BLACK (L2)........RED (L3)........BLUE (NEUT)....WHITE
24 VDC	INTRINSICALLY SAFE
(ALL).......BLUE	(ALL).......LIGHT BLUE

4) ALL WIRE SHALL BE SIZED IN ACCORDANCE WITH NEC CODES. SINGLE CONDUCTORS SHALL BE STRANDED CDPPER WITH THWN INSULATION, RATED FOR 600 VAC, AND UL LISTED AS MTW, UNLESS NOTED OTHERWISE. MINIMUM CONDUCTOR SIZE SHALL BE #14 AWG. GROUND CONDUCTOR SIZE SHALL BE AS INDICATED ON THE DRAWINGS. WHERE NOT INDICATED, IT SHALL BE #14 AWG OR LARGER.

5) CONDUIT ENTRIES INTO ENCLOSURES SHALL BE LOCATED WITH CARE TO ASSURE ADEOUATE WIRE BENDING SPACE. WIRING SHALL BE ROUTED SO THAT DOOR MOUNTED EOUIPMENT WILL NOT INTERFERE WITH IT WHEN THE DOOR IS CLOSED.

6) INTRINSICALLY SAFE WIRING CONDUIT ENTRIES INTO ENCLOSURE SHALL BE LOCATED AS CLOSE AS POSSIBLE TO THE WIREWAY PROVIDED FOR INTRINSICALLY SAFE FIELD WIRING SO THAT ALL INTRINSIC WIRING IS ISOLATED (AT LEASED 2") FROM ALL OTHER FIELD AND PANEL WIRING AND SECURED. INTRINSICALLY SAFE FIELD WIRING SHALL BE ROUTED THROUGH THE WIREWAY PROVIDED EXCLUSIVELY FOR INTRINSICALLY SAFE WIRING. ALL WIRING SHALL BE IN COMPLIANCE WITH THE NATIONAL ELECTRICAL CODE ARTICLE 5D4. OTHER APPLICABLE ARTICLES INCLUDE 501 & 515.

7) ENGINEER HAS IDENTIFIED AS MANY OF THE PLC INPUTS AND OUTPUTS AS POSSIBLE THAT WILL BE NEEDED TO MAKE THE CONTROL PROGRAM OPERATE AS REOUIRED. ADDITIONAL I/O MAY BE IDENTIFIED WHEN THE CONTROL PROGRAM IS WRITTEN AND REOUIRE WIRING. THESE SHALL BE CONSIDERED PART OF THESE SHOP DRAWINGS. THE INSTALLING CONTRACTOR SHALL INSTALL 10% SPARE CONDUCTORS TERMINATED ON TERMINAL BLOCKS ON BOTH ENDS TO MEET ADDITIONAL I/O REQUIREMENTS.

8) ALL WIRES SHALL BE TAGGED AT EVERY TERMINATION POINT. SHORT WIRE LENGTHS, (LESS THAN 8") WHERE THE ENTIRE CONDUCTOR IS VISIBLE MAY BE TAGGED AT JUST ONE END. WIRE LABELS FOR WIRES SMALLER THAN NO. 4. SHALL BE VINYL, SELF ADHESIVE, WRAPAROUND, WITH MACHINE PRINTED NUMBERS AND LETTERS. WIRE SIZES NO. 4 AND LARGER AND MULTI CONDUCTOR CABLES SHALL BE MARKED WITH ONE-PIECE, NYLON LOCKING MACHINE PRINTED MARKER TIES EOUAL TO PANDUIT PLM SERIES. WIRE TAG NUMBER SHALL BE AS INDICATED ON THE DRAWINGS.

9) DO NOT ROUTE ANY COMMUNICATION CABLES IN WIREWAYS WITH 120 VAC WIRING. ROUTE ALL THESE CABLES AWAY FROM 120 VAC WIRING. WHERE 120 VAC CONDUCTORS MUST BE CROSSED, DO SO AT RIGHT ANGLES AND PROVIDE AT LEAST 1" SEPARATION.

1D) NO MORE THAN TWO WIRES SHALL BE CONNECTED TO ANY ONE TERMINAL.

WOODARD & CURRAN
40 Shattuck Road, Suite 110
Andover, Massachusetts 01810
866.702.6371 | www.woodardcurran.com
COMMITMENT & INTEGRITY DRIVE RESULTS

THIS DOCUMENT IS THE PROPERTY OF WOODARD & CURRAN INC. AND ITS CLIENT. REPRODUCTION OR MODIFICATION WITHOUT WRITTEN PERMISSION IS PROHIBITED.

COMMONWEALTH OF MASSACHUSETTS
JONATHON H. GRANT
CONTROL SYSTEMS
NO. 49800
PROFESSIONAL ENGINEER

REV	DESCRIPTION	DATE
	ISSUED FOR BID	9/12/14

DESIGNED BY: DC
CHECKED BY: DC
DRAWN BY: RPM
227251.30-I201.DWG

SCADA PANEL LEGEND AND NOTES

LOWELL REGIONAL WATER UTILITY
LOWELL, MASSACHUSETTS

RESIDUALS HANDLING FACILITIES UPGRADE

JOB NO.: 227251.30
OATE: SEPTEMBER 2014
SCALE: NTS
SHEET: 1 OF 9

I-201

\\ANDOVER\Projects\227251 Lowell MA - PEF 2012\wip\30 - Residuals Design\Cad Drawings\I&C\227251.30-I201.dwg, Sep 10, 2014 - 10:11am

BILL OF MATERIAL

ITEM	QTY.	MANUFACTURER	PART NUMBER	DESCRIPTION	DESIGNATION
				****ENCLOSURE & RELATED EQUIPMENT****	
1	1	HOFFMAN	CP3630	BACK PANEL, 34.25" x 28.25"	SUB PANEL
2	1	HOFFMAN	CSD363012	ENCLOSURE, NEMA 4 PAINTED STEEL, 36.00" x 30.00" x 12.00"	ENCLOSURE
3	1	HOFFMAN	CMFKSS	WALL MOUNTING BRACKET KIT, STAINLESS	PANEL MOUNTING KIT
4					
5					
6					
7	1	HOFFMAN	CWHPTO	DOOR HANDLE	
8					
9	1	HOFFMAN	A10P8	BACK PANEL, 8.75" x 6.88"	RELAY INTERFACE PANEL SUB PANEL
10	1	HOFFMAN	A-1086CHSCFG	ENCLOSURE, NEMA 4X FIBERGLASS, 10.00" x8.00" x 6.25"	RELAY INTERFACE PANEL ENCLOSURE
11					
12					
				****PLC & RELATED EQUIPMENT****	
16	1	ALLEN BRADLEY	1766-L32BXB	MICROLOGIX 1400 PLC, 24VDC	PLC
17	1	ALLEN BRADLEY	1766-MM1	MICROLOGIX 1400 PLC MEMORY MODULE	
18	1	ALLEN BRADLEY	1762-IQ16	DIGITAL INPUT EXPANSION MODULE, 16 PT.	SLOT 1
19	1	ALLEN BRADLEY	1762-IF4	ANALOG INPUT EXPANSION MODULE, 4 CHANNEL	SLOT 2
20	1	ALLEN BRADLEY	1762-OF4	ANALOG OUTPUT EXPANSION MODULE, 4 CHANNEL	SLOT 3
21					
22					
23					
24					
25					
26					
27					
28					
29					
30					
				****OPERATOR INTERFACE EQUIPMENT****	
36					
37					
38					
39					
40					
41					
42					
43					
44					
45					
46					
47					
				****TERMINAL BLOCKS & RELATED EQUIPMENT****	
50	49	ALLEN BRADLEY	1492-JD3	TERMINAL BLOCK 2 TIER	TB1
51	15	ALLEN BRADLEY	1492-EBJD3	TERMINAL BLOCK END BARRIER, 2 TIER	TB1
52	4	ALLEN BRADLEY	1492-EAJ35	TERMINAL BLOCK END ANCHOR	TB1,PLC
53	3	ALLEN BRADLEY	1492-CJJ5-10	TERMINAL BLOCK JUMPER, 10 POLE	TB1
54	13	ALLEN BRADLEY	1492-JG3	TERMINAL BLOCK, GROUNDING	TB1
55	2	ALLEN BRADLEY	199-DR1	DIN RAIL, STANDARD	PLC, ETHERNET SWITCH, PWS1, UPSM, MOUNTING
56	1	ALLEN BRADLEY	1492-DR6	DIN RAIL, RAISED	TB1
57	4	ALLEN BRADLEY	1492-H4	FUSED TERMINAL BLOCK, NEON INDICATOR	FU1-FU4
58	12	ALLEN BRADLEY	1492-H5	FUSED TERMINAL BLOCK, LED INDICATOR	FU5-FU16
59	3	ALLEN BRADLEY	1492-N37	FUSED TERMINAL BLOCK END BARRIER	FU4, FU5, FU16
60	2	ALLEN BRADLEY	1492-N49	FUSE BLOCK SIDE JUMPERS 10 POLE	FU1-FU4, FU6-FU16
61	2	ALLEN BRADLEY	1492-SJS	FUSE BLOCK SIDE JUMPER INSULATING SLEEVE	FU1-FU4, FU6-FU16
62	1	ALLEN BRADLEY	1492-M5X12	GROUNDING TERMINAL BLOCK BLANK MARKING TAGS, 144 CT.	TB1
63	2	ALLEN BRADLEY	1492-M5X8	TERMINAL BLOCK BLANK MARKING TAGS, 2 TIER, 144 CT.	TB1
64	1	ALLEN BRADLEY	1492-MS&X12	FUSE BLOCK BLANK MARKING TAGS, 100 CT.	FU1-FU16
65	1	ALLEN BRADLEY	700-HLT1L1	RELAY, SPDT, 120VAC COIL	PFR
66	6	ALLEN BRADLEY	700-HK36Z24-4	RELAY, SPDT, 24VDC COIL	CR0-CR4, CRC
67	1	ALLEN BRADLEY	700-HK36Z12-4	RELAY, SPDT, 12VDC COIL	CRA
68	8	ALLEN BRADLEY	700-HN121	RELAY SOCKET	CR0-CR4, CRA, CRB, CRC
69	1	ALLEN BRADLEY	1492-MC6X10	SPDT RELAY (120VAC) BLANK MARKING TAGS, 100 CT.	PFR
70	1	ALLEN BRADLEY	700-HK36Z06-4	RELAY, SPDT, 6VDC COIL	CRB
71					
72	1	ALLEN-BRADLEY	1489-A1C150	CIRCUIT BREAKER, 15AMP, SINGLE POLE	CB1
73					
74	12	BUSSMANN	AGC-1	FUSE, 1A, 250V, FAST ACTING	FU2, FU6-FU8, FU11-FU13, FU15,FU16, PLUS SPARES
75	5	BUSSMANN	AGC-3	FUSE, 3A, 250V, FAST ACTING	FU1, FU9, FU14, PLUS SPARES
76	4	BUSSMANN	AGC-5	FUSE, 5A, 250V, FAST ACTING	FU3, FU4, PLUS SPARE
77	2	BUSSMANN	AGC-8	FUSE, 8A, 250V, FAST ACTING	FU5, PLUS SPARE
78	2	BUSSMANN	AGC-2	FUSE, 2A, 250V, FAST ACTING	FU10, PLUS SPARE
79	2	PHOENIX CONTACT	2859479	VAL-CP-1S-175, 120VAC SURGE PROTECTOR	SUP1, PLUS 1 SPARE
80					
81	5	PHOENIX CONTACT	2838186	TERMITRAB ANALOG LOOP SURGE PROTECTOR	SUP2-5, PLUS 1 SPARE
82	5	PHOENIX CONTACT	2838995	ANALOG LOOP SURGE PROTECTOR END COVER	SUP2-5, PLUS 1 SPARE
83	1	PHOENIX CONTACT	1051003	ANALOG LOOP SURGE PROTECTOR MARKING STRIP	SUP2-5
84					
85					
86					
87					
88					
89					
				****WIREDUCT****	
93	6FT	PANDUIT	F1X4LG6	WIRING DUCT, 1"W x 4"H	
94	6FT	PANDUIT	C1LG6	WIRING DUCT COVER, 1"W	
95	12FT	PANDUIT	F1.5X4LG6	WIRING DUCT, 1.5"W x 4"H	
96	12FT	PANDUIT	C1.5LG6	WIRING DUCT COVER, 1.5"W	
97					
98					
				NOTE:	

ITEM	QTY.	MANUFACTURER	PART NUMBER	DESCRIPTION	DESIGNATION
				****WIREDUCT (CONT)****	
99					
100					
101					
102					
103					
104					
				****HIGH VOLTAGE RELATED EQUIPMENT****	
108					
109					
110					
111					
112					
113					
114					
115					
116					
117					
118					
119					
120					
121					
122					
123					
124					
125					
126					
127					
128					
129					
				****POWER SUPPLIES****	
138					
139					
140					
141					
142					
143	1	B&B ELECTRONICS	DR-UPS40	MEANWELL 40AMP DC UPS MODULE	UPSM
144	1	B&B ELECTRONICS	DRP-240-24	MEANWELL 240WATT SINGLE OUTPUT POWER SUPPLY	PWS1
145	2	POWERSONIC	12180NB	SEALED RECHARGEABLE LEAD-ACID BATTERY, 12V, 18AH	
				****COMMUNICATIONS****	
146					
147					
148					
149					
150					
151	1	CABLESPLUS USA	WAC-2X	FIBER PATCH PANEL ENCLOSURE	PATCH PANEL (SHIP LOOSE WITH SCADA PANEL)
152	1	CABLESPLUS USA	AP-VCC1CB	FIBER TYPE SC ADAPTER PANEL INSERT (12 FIBER, 6-PAIR)	PATCH PANEL (SHIP LOOSE WITH SCADA PANEL)
153	1	CABLESPLUS USA	7915150M1D002MR3	FIBER PATCH CABLE, DUPLEX SC TO SC MULTIMODE, 62.5/125, 2 METER	PATCH PANEL (SHIP LOOSE WITH SCADA PANEL)
154					
155					
156					
157	1	MOXA	EDS-208-M-SC	ETHERNET SWITCH, 10/100 Mbps, 7 COPPER, & 1 FIBER PORT	ETHERNET SWITCH
158					
159	1	BLACK BOX	EVNSL641-0006	CAT6 ETHERNET PATCH CABLE, 6 FT.	
160					
161					
162					
				****MISCELLANEOUS PANEL EQUIPMENT****	
164	1	PANDUIT	UGB2-0-414-6	GROUND BAR	
165					
166	3	PANEL FABRICATOR		NAMEPLATE, PHENOLIC, ENGRAVED	SEE SCHEDULE, ON EQUIPMENT LAYOUT
167					
168					
169					
170	1	ALLEN BRADLEY	1492-REC15G	GFCI DUPLEX RECEPTACLE, 15 AMP, DIN RAIL MOUNTED	PROGRAMMING RECEPTACLE
171					
172					
173	1	TELEDYNE ISCO	68-5800-020	REFRIGERATED SAMPLER CONNECTION CABLE, 10 FT.	SHIP WITH RELAY INTERFACE PANEL
174					
175	1	EMEDCO	QS3743	WARNING LABEL "ARC FLASH AND SHOCK HAZARD"	
176	1	EMEDCO	SQS110	WARNING LABEL "DEVICE POWERED FROM SEVERAL SOURCES"	
177					
178					
179					
185					
186					
187					
188					
189					
190					
191					
192					
193					
194					
195					
196					
197					
198					
199					

40 Shattuck Road, Suite 110
Andover, Massachusetts 01810
866.702.6371 | www.woodardcurran.com

COMMITMENT & INTEGRITY DRIVE RESULTS

THIS DOCUMENT IS THE PROPERTY OF WOODARD & CURRAN INC. AND ITS CLIENT. REPRODUCTION OR MODIFICATION WITHOUT WRITTEN PERMISSION IS PROHIBITED.

COMMONWEALTH OF MASSACHUSETTS
JONATHON H. GRANT
CONTROL SYSTEMS
NO. 49800
REGISTERED PROFESSIONAL ENGINEER
9/12/14

REV	DESCRIPTION	DATE
	ISSUED FOR BID	9/12/14

DESIGNED BY: DC | CHECKED BY: DC
DRAWN BY: RPM | 227251.30-I202.dwg

SCADA PANEL
BILL OF MATERIAL

LOWELL REGIONAL WATER UTILITY
LOWELL, MASSACHUSETTS

RESIDUALS HANDLING
FACILITIES UPGRADE

JOB NO.: 227251.30
DATE: SEPTEMBER 2014
SCALE: NTS
SHEET: 2 OF 9

I-202

\\ANDOVER\Projects\227251 Lowell MA - EST 2013\wip\30 - Residuals Design\Civil Drawings\MEC\227251.30-I202.dwg, Sep 10, 2014 - 10:11am

NAMEPLATE SCHEDULE			
ITEM	DIMENSION	DESCRIPTION	FABRICATION COMMENTS
A	5" x 1"	SCADA PANEL	NAMEPLATE TO BE BLACK WITH WHITE LETTERS WITH ADHESIVE BACK. TEXT SIZE TO BE .375
B	2.50" x .75"	GFCI RECEPTACLE FOR PROGRAMMING ONLY	NAMEPLATE TO BE RED WITH WHITE LETTERS WITH ADHESIVE BACK. TEXT SIZE TO BE .12
C	6" x 1"	REFRIGERATED SAMPLER RELAY INTERFACE PANEL	NAMEPLATE TO BE BLACK WITH WHITE LETTERS WITH ADHESIVE BACK. TEXT SIZE TO BE .25

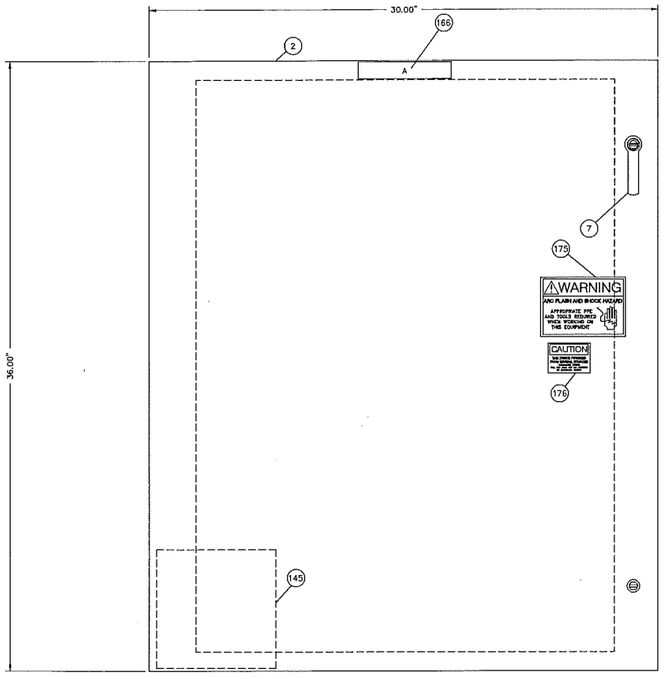

SCADA PANEL ENCLOSURE
FRONT VIEW

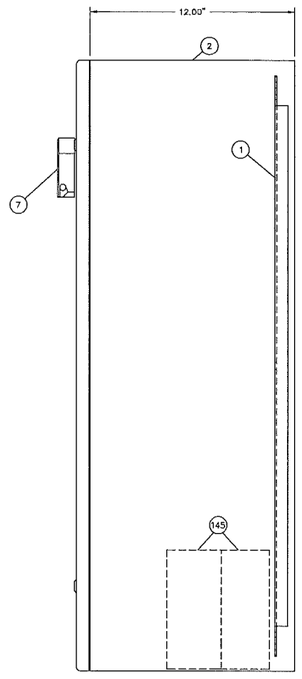

SCADA PANEL ENCLOSURE
RIGHT SIDE VIEW

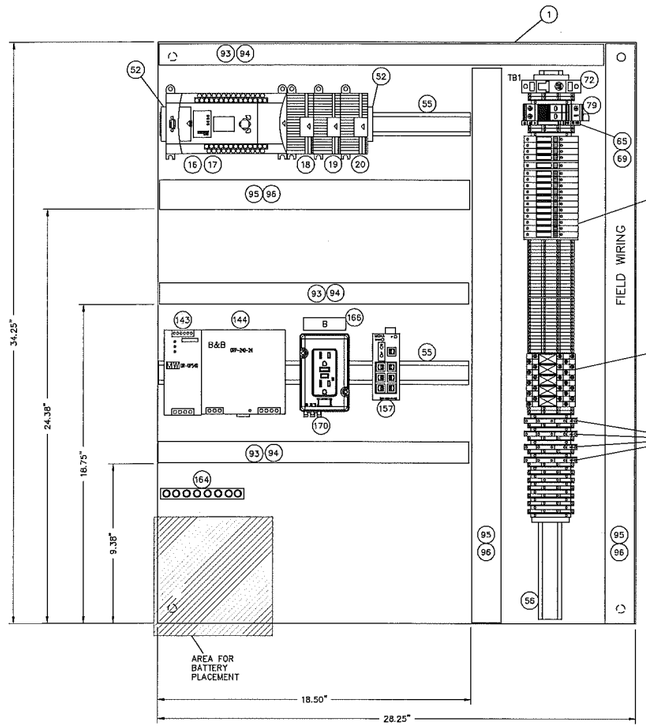

SCADA PANEL ENCLOSURE
SUB PANEL

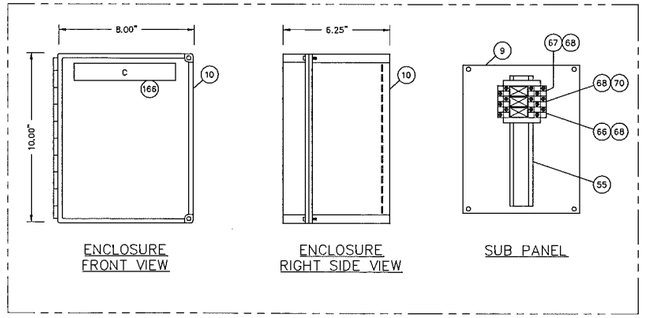

REFRIGERATED SAMPLER RELAY
INTERFACE PANEL

INSTALLING CONTRACTOR NOTES:

1) CONTRACTOR SHALL USE CAUTION WHEN LANDING CONDUITS IN THE BOTTOM OF ENCLOSURE TO AVOID INTERFERING WITH BATTERY PLACEMENT (ITEM 145).

WOODARD & CURRAN
40 Shattuck Road, Suite 110
Andover, Massachusetts 01810
866.702.5071 | www.woodardcurran.com

COMMITMENT & INTEGRITY DRIVE RESULTS

THIS DOCUMENT, OR THE PROPERTY OF WOODARD & CURRAN, INC., AND THE CLIENT. REPRODUCTION OR MODIFICATION WITHOUT WRITTEN CONSENT IS PROHIBITED.

COMMONWEALTH OF MASSACHUSETTS
JONATHON H. GRANT
CONTROL SYSTEMS
NO. 48800
REGISTERED PROFESSIONAL ENGINEER

REV	DESCRIPTION	DATE
	ISSUED FOR BID	9/12/14

DESIGNED BY: DC | CHECKED BY: DC
DRAWN BY: RPM | 227251.30-I203.DWG

SCADA PANEL
EQUIPMENT LAYOUT

LOWELL REGIONAL WATER UTILITY
LOWELL, MASSACHUSETTS

RESIDUALS HANDLING
FACILITIES UPGRADE

JOB NO.: 227251.30
DATE: SEPTEMBER 2014
SCALE: NTS
SHEET: 3 OF 9

I-203

\\WOD04ES\Projects\227251 Lowell MA - PEF 2013\wip\30 - Residuals Design\Cad Drawings\I&C\227251.30-I203.dwg, Sep 10, 2014 - 10:11am

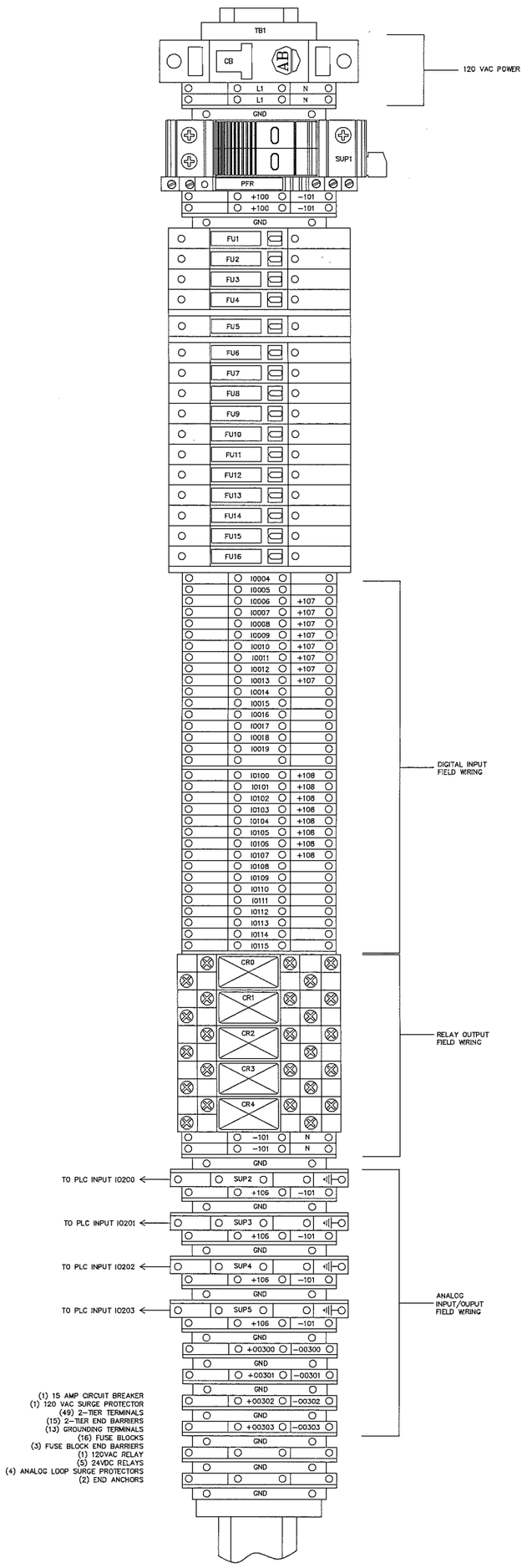

I-204	LOWELL REGIONAL WATER UTILITY LOWELL, MASSACHUSETTS	SCADA PANEL TERMINAL BLOCK LAYOUT	ISSUED FOR BID 9/12/14
SHEET: 4 OF 9 SCALE: NTS DATE: SEPTEMBER 2014	RESIDUALS HANDLING FACILITIES UPGRADE		DESIGNED BY: DC CHECKED BY: DC DRAWN BY: RPM 227251.30-I204.DWG

COMMONWEALTH OF MASSACHUSETTS
JONATHON H. GRANT
CONTROL SYSTEMS
NO. 49800
PROFESSIONAL ENGINEER

WOODARD & CURRAN
40 Shattuck Road, Suite 110
Andover, Massachusetts 01810
866.702.6371 | www.woodardcurran.com
COMMITMENT & INTEGRITY DRIVE RESULTS

THIS DOCUMENT IS THE PROPERTY OF WOODARD & CURRAN INC. AND ITS CLIENT. REPRODUCTION OR MODIFICATION WITHOUT WRITTEN PERMISSION IS PROHIBITED.

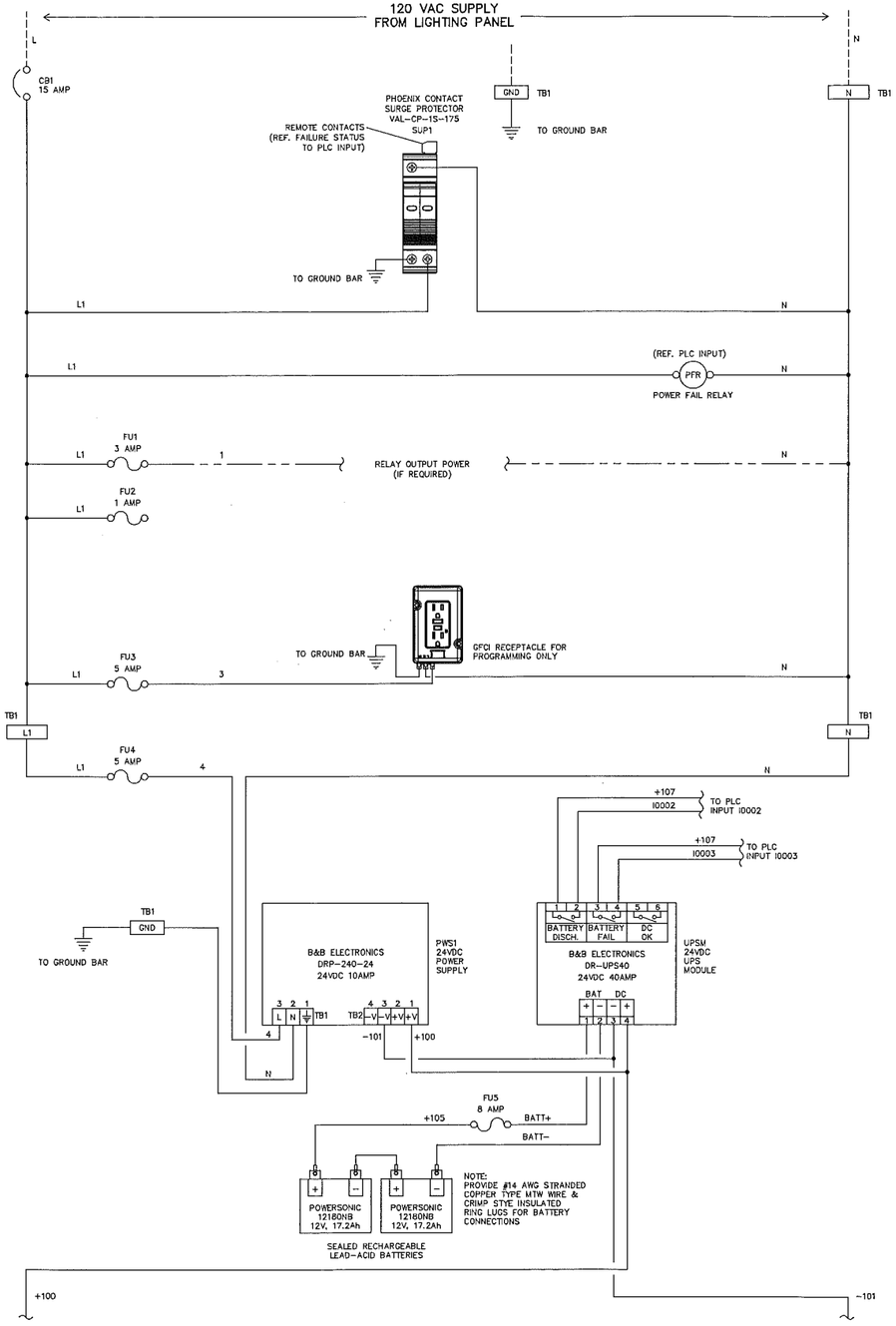

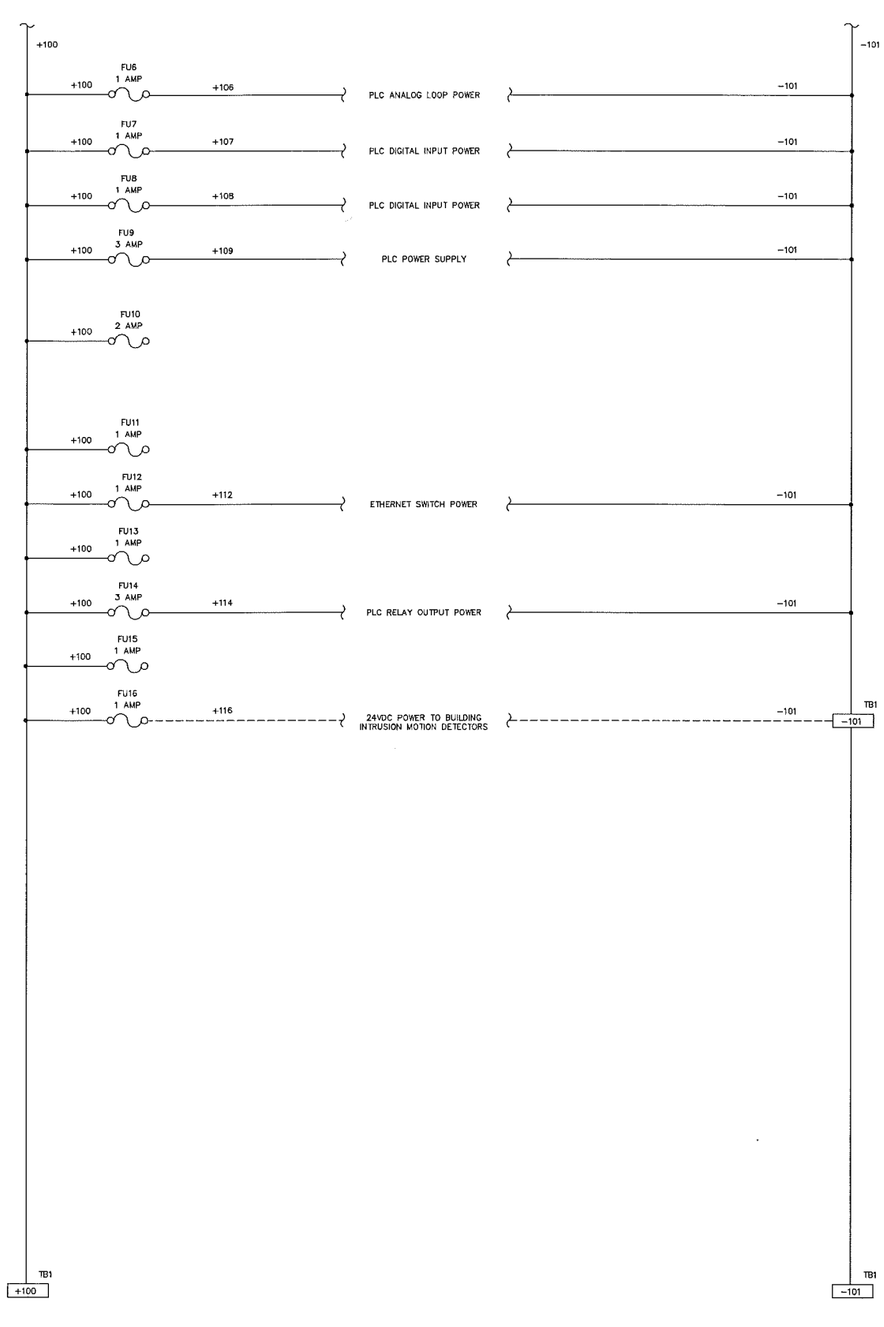

40 Shattuck Road, Suite 110
Andover, Massachusetts 01810
866.702.6371 | www.woodardcurran.com

COMMITMENT & INTEGRITY DRIVE RESULTS

THIS DOCUMENT IS THE PROPERTY OF WOODARD & CURRAN INC. AND ITS CLIENT. REPRODUCTION OR MODIFICATION WITHOUT WRITTEN PERMISSION IS PROHIBITED.

COMMONWEALTH OF MASSACHUSETTS
JONATHON H. DAVIS
CONTROL SYSTEMS
NO. 49800
REGISTERED PROFESSIONAL ENGINEER

REV	DESCRIPTION	DATE
	ISSUED FOR BID	9/12/14

DESIGNED BY: DC | CHECKED BY: DC
DRAWN BY: RPM | 2725130-1205.DWG

SCADA PANEL POWER DISTRIBUTION

LOWELL REGIONAL WATER UTILITY
LOWELL, MASSACHUSETTS

RESIDUALS HANDLING FACILITIES UPGRADE

JOB NO.: 227251.30
DATE: SEPTEMBER 2014
SCALE: NTS
SHEET: 5 OF 9

I-205

\\ANDOVER\Projects\227251 Lowell MA - PEF 2012\wip\30 - Residuals Design\Cad Drawings\I&C\227251.30-I205.dwg, Sep 10, 2014 - 10:11am

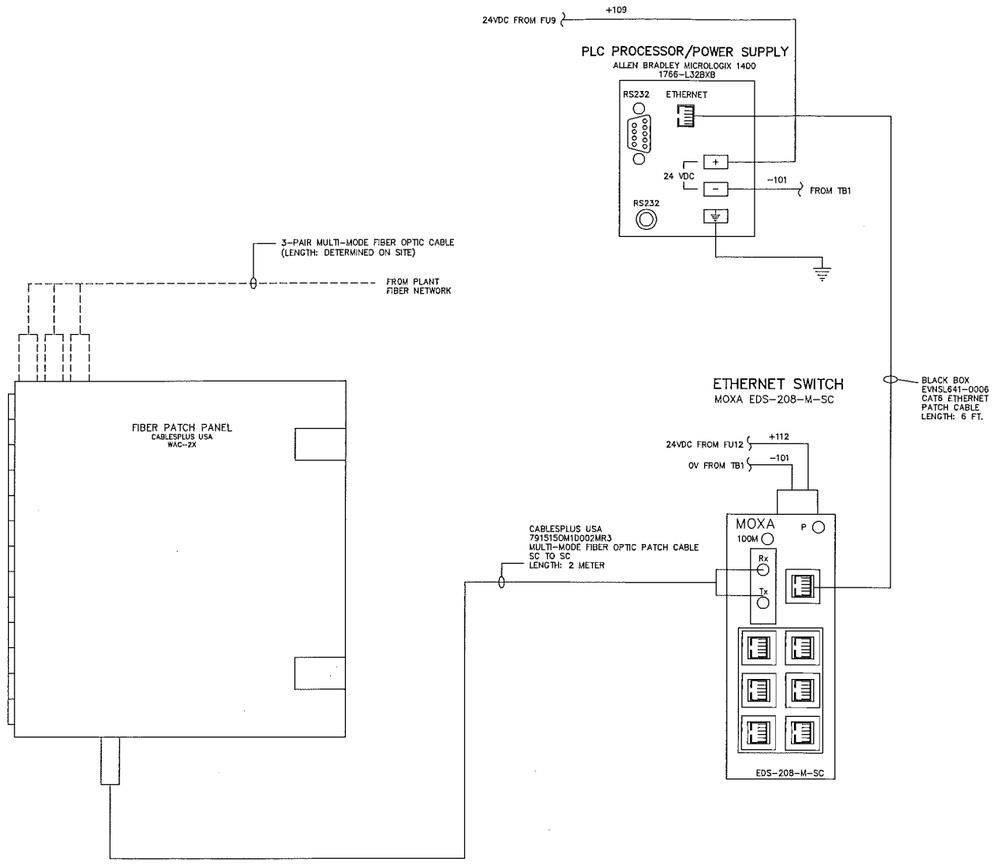

THIS AREA INTENTIONALLY
LEFT BLANK

PORT DETAIL

MICROLOGIX 1400 PORT CONFIGURATION			
CHANNEL 0		CHANNEL 1	
PRIMARY PROTOCOL:	DF1 RADIO MODEM	PRIMARY PROTOCOL:	ETHERNET
BAUD:	9600	IP ADDRESS:	XX
NODE ADDRESS:	XX	SUBNET:	XX
CONTROL LINE:	HALF DUPLEX MODEM	GATEWAY:	XX
PRE-TRANSMIT DELAY:	0 (x5ms)	BOOTP ENABLE:	UNCHECKED
PARITY:	NONE	DHCP ENABLE:	UNCHECKED
		HTSP SERVER ENABLE:	CHECKED
		AUTO NEGOTIATE:	CHECKED
		PORT SETTING:	10/100 Mbps FULL DUPLEX/HALF DUPLEX
		MSG CONNECTION TIMEOUT:	(x1ms) : 15000
		MSG REPLY TIMEOUT:	(x1ms) : 3000

40 Shattuck Road, Suite 110
Andover, Massachusetts 01810
866.702.6371 | www.woodardcurran.com
WOODARD & CURRAN
COMMITMENT & INTEGRITY DRIVE RESULTS

THIS DOCUMENT IS THE PROPERTY OF WOODARD & CURRAN INC. AND ITS CLIENT. REPRODUCTION OR MODIFICATION WITHOUT WRITTEN PERMISSION IS PROHIBITED.

COMMONWEALTH OF MASSACHUSETTS
JONATHON H. GRANT
CONTROL SYSTEMS
NO. 49800
PROFESSIONAL ENGINEER

REV	DESCRIPTION	DATE
	ISSUED FOR BID	9/12/14

DESIGNED BY: DC
DRAWN BY: RPM
CHECKED BY: DC
227251.30-I206.DWG

SCADA PANEL
COMMUNICATIONS

LOWELL REGIONAL WATER UTILITY
LOWELL, MASSACHUSETTS

RESIDUALS HANDLING
FACILITIES UPGRADE

JOB NO.: 227251.30
DATE: SEPTEMBER 2014
SCALE: NTS
SHEET: 6 OF 9

I-206

\\ANDOVER\Projects\227251 Lowell MA - PEF 2012\wip\30 - Residuals Design\Cad Drawings\I&C\227251.30-I206.dwg, Sep 10, 2014 - 10:11am

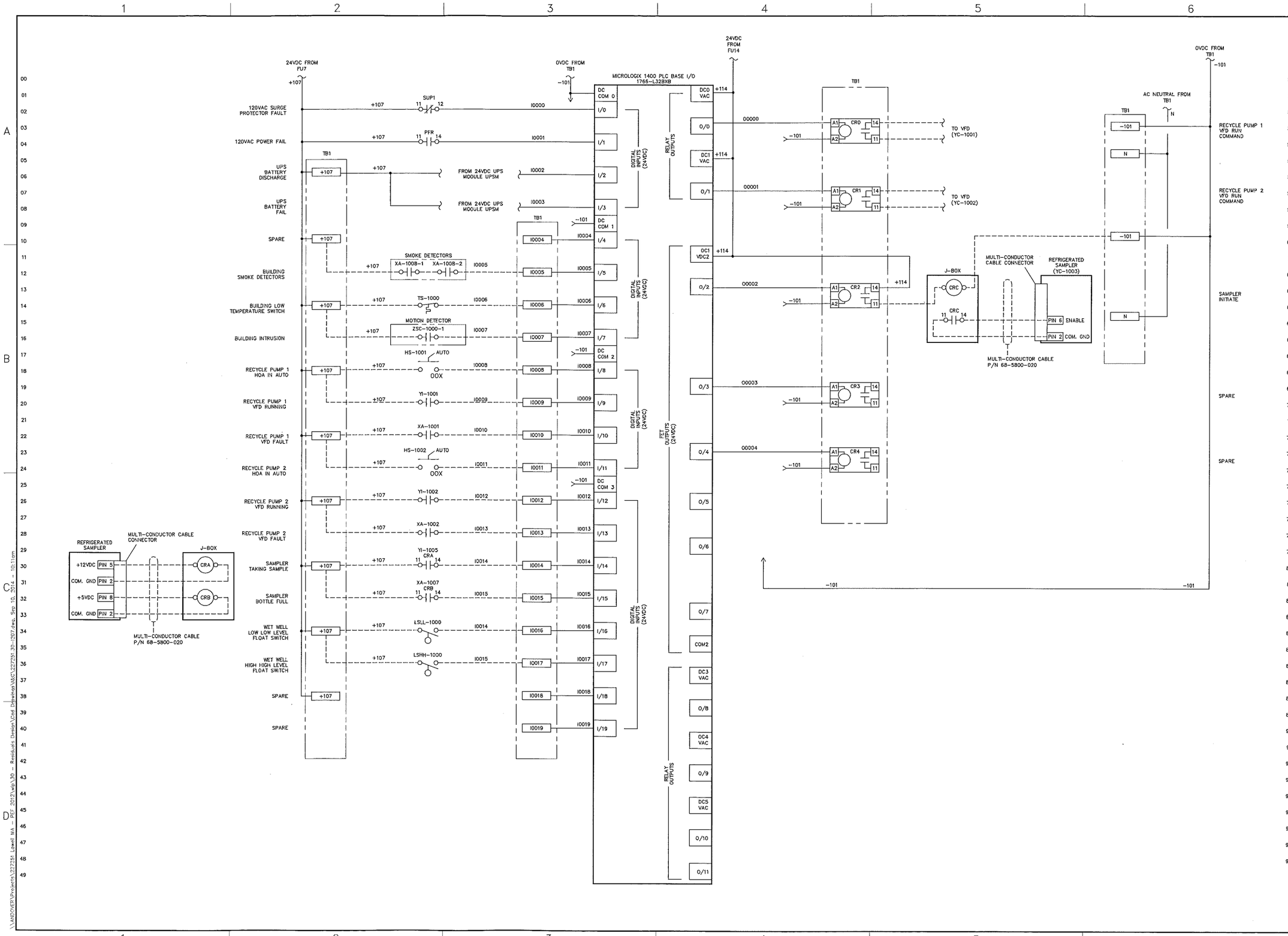

40 Shattuck Road, Suite 110
Andover, Massachusetts 01810
866.702.6371 | www.woodardcurran.com
WOODARD & CURRAN
COMMITMENT & INTEGRITY DRIVE RESULTS

THIS DOCUMENT IS THE PROPERTY OF WOODARD & CURRAN INC. AND ITS CLIENT. REPRODUCTION OR MODIFICATION WITHOUT WRITTEN PERMISSION IS PROHIBITED.

REV	DESCRIPTION	DATE
	ISSUED FOR BID	9/12/14

DESIGNED BY: DC
DRAWN BY: RPM
CHECKED BY: DC
227251.30-I207.DWG

SCADA PANEL PLC BASE-DIGITAL INPUTS & RELAY OUTPUTS

LOWELL REGIONAL WATER UTILITY
LOWELL, MASSACHUSETTS

RESIDUALS HANDLING FACILITIES UPGRADE

JOB NO.: 227251.30
DATE: SEPTEMBER 2014
SCALE: NTS
SHEET: 7 OF 9

I-207

\\ANDOVER\Projects\227251 Lowell MA - PEF 2012\wip\30 - Residuals Design\Cad Drawings\M&C\227251.30-I207.dwg, Sep 10, 2014 - 10:11am

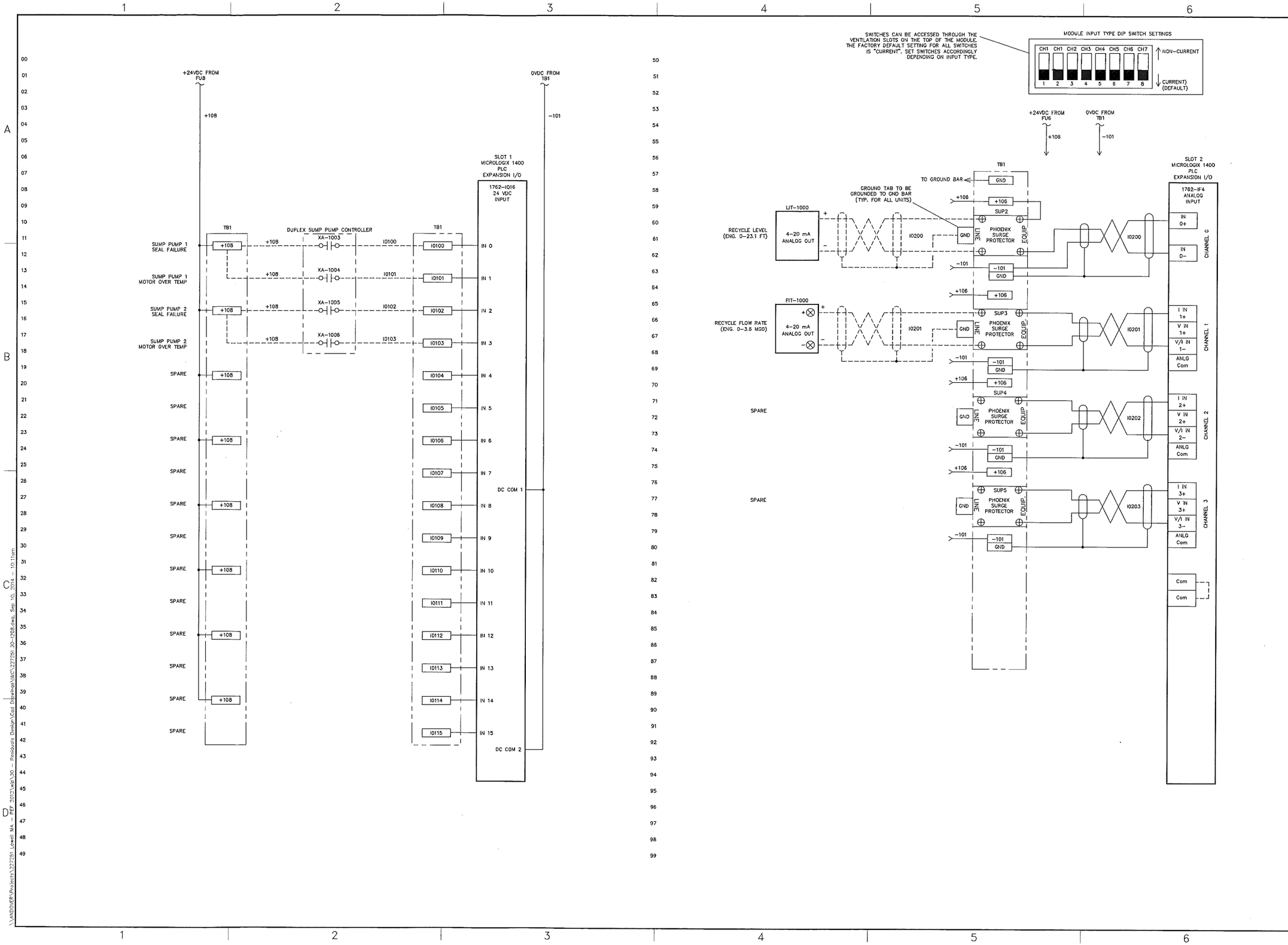

40 Shattuck Road, Suite 110
Andover, Massachusetts 01810
866.702.6371 | www.woodardcurran.com
WOODARD & CURRAN
COMMITMENT & INTEGRITY DRIVE RESULTS

THIS DOCUMENT IS THE PROPERTY OF WOODARD & CURRAN INC. AND ITS CLIENT. REPRODUCTION OR MODIFICATION WITHOUT WRITTEN PERMISSION IS PROHIBITED.

COMMONWEALTH OF MASSACHUSETTS
JONATHAN H. GRANT
CONTROL SYSTEMS NO. 49800
PROFESSIONAL ENGINEER

REV	DESCRIPTION	DATE
	ISSUED FOR BID	9/12/14

DESIGNED BY: DC
CHECKED BY: DC
DRAWN BY: RPM
227251.30-208.DWG

SCADA PANEL PLC EXPANSION MODULES DIGITAL & ANALOG INPUTS

LOWELL REGIONAL WATER UTILITY
LOWELL, MASSACHUSETTS

RESIDUALS HANDLING FACILITIES UPGRADE

JOB NO.: 227251.30
DATE: SEPTEMBER 2014
SCALE: NTS
SHEET: 8 OF 9

I-208

\\ANDOVER\Projects\227251 Lowell MA - PEF 2012\wip\30 - Residuals Design\Cad Drawings\&C\227251.30-I208.dwg, Sep 10, 2014 - 10:11am

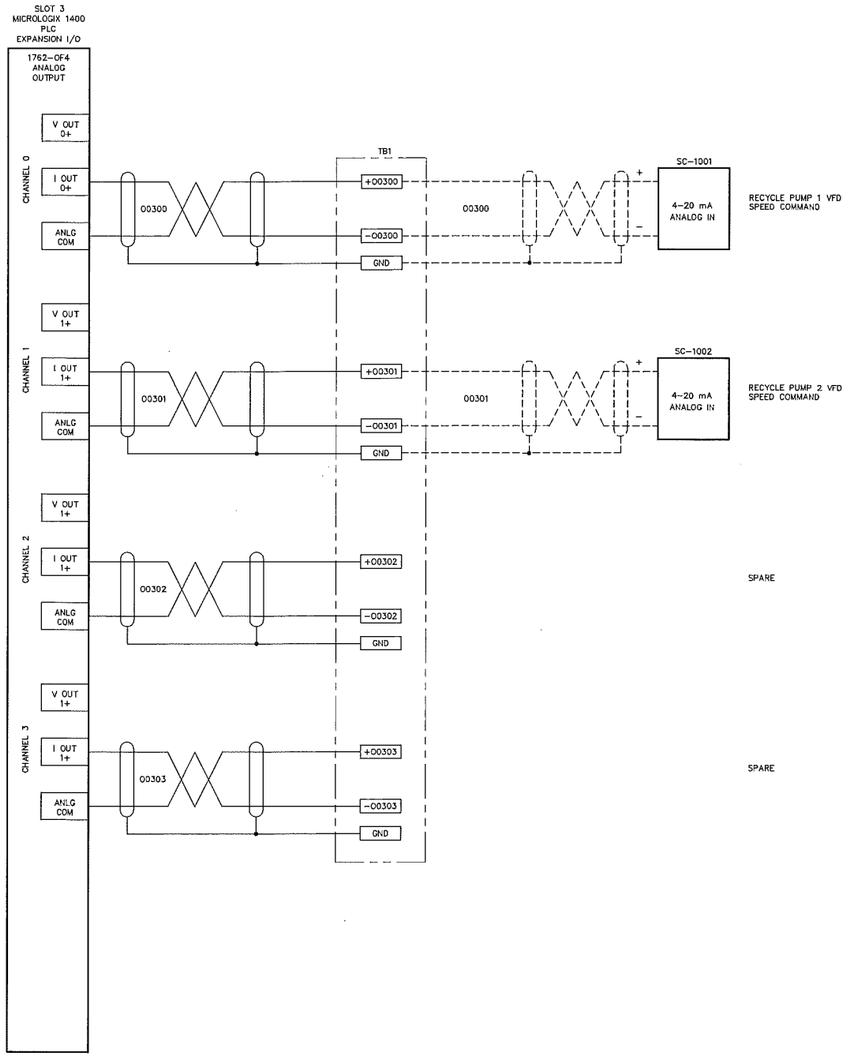

\\ANDOVER\Projects\227251 Lowell MA - PEF 2012\wip\30 - Residuals Design\Cad Drawings\MC\227251.30-I209.dwg, Sep 10, 2014 - 10:12am

40 Shattuck Road, Suite 110
Andover, Massachusetts 01810
866.702.5371 | www.woodardcurran.com

WOODARD & CURRAN
COMMITMENT & INTEGRITY DRIVE RESULTS

THIS DOCUMENT IS THE PROPERTY OF WOODARD & CURRAN INC. AND ITS CLIENT. REPRODUCTION OR MODIFICATION WITHOUT WRITTEN PERMISSION IS PROHIBITED.

COMMONWEALTH OF MASSACHUSETTS
JONATHON H. GRANT
CONTROL SYSTEMS
NO. 49800
PROFESSIONAL ENGINEER

REV	DESCRIPTION	DATE
	ISSUED FOR BID	9/12/14

DESIGNED BY: DC
DRAWN BY: RPM
CHECKED BY: DC
227251.30-I209.DWG

SCADA PANEL
PLC EXPANSION MODULE
ANALOG OUTPUTS

LOWELL REGIONAL WATER UTILITY
LOWELL, MASSACHUSETTS

RESIDUALS HANDLING
FACILITIES UPGRADE

JOB NO.: 227251.30
DATE: SEPTEMBER 2014
SCALE: NTS
SHEET: 9 OF 9

I-209