LOWELL REGIONAL WATER UTILITY
LOWELL, MASSACHUSETTS

WATER SYSTEM IMPROVEMENTS

DEP PROJECT NO. DWSRF-3531
CONTRACT NO. 2
PROJECT NO. 224802.20

IFB #15-71

MARCH 2015

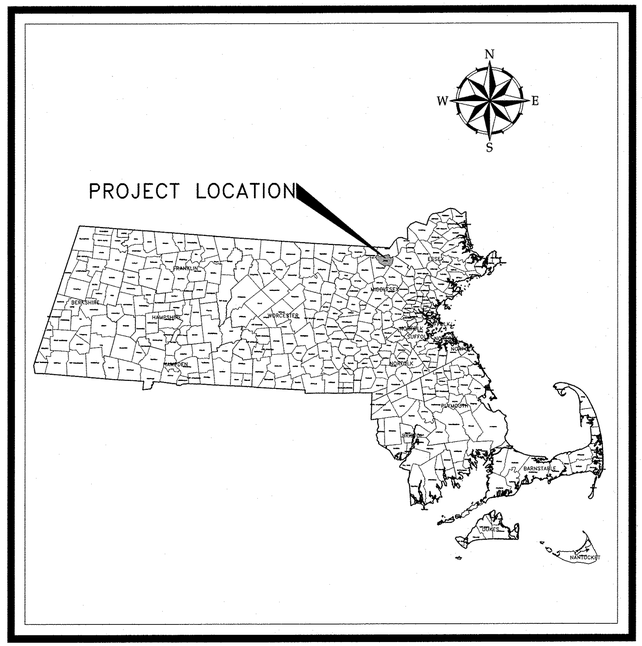

PROJECT LOCATION MAP

50 0 50 100
scale mile

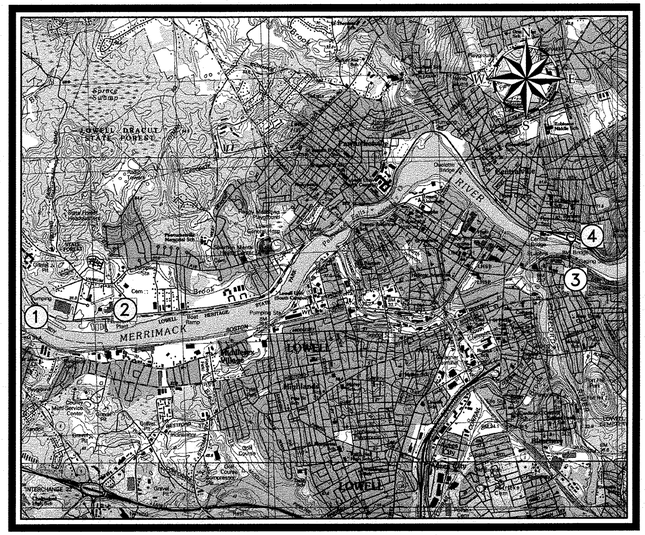

PROJECT LOCATIONS

1. RAW WATER PUMP STATION
2. WATER TREATMENT PLANT
3. STACKPOLE STREET PUMP STATION
4. WATER MAIN IMPROVEMENTS

SITE LOCATION MAP

SCALE: 1:31250

SOURCE
U.S.G.S. QUADRANGLE, LOWELL, MA,
PHOTO REVISED 1987, 15 MINUTE SERIES

WOODARD & CURRAN

980 Washington St. | Dedham, MA 02026
800.446.5518 | www.woodardcurran.com

COMMITMENT & INTEGRITY DRIVE RESULTS

COMMONWEALTH OF MASSACHUSETTS
ROBERT C. CHAPELL
CHAPELL
SANITARY
No. 39848
REGISTERED PROFESSIONAL ENGINEER

3/3/15

ISSUE FOR BID

\\wc\shared\Projects\224802 Lowell MA - Water System Improvement PEF 2011\wcp\Drawings\General\224802-COVER.dwg, Mar 02, 2015 - 6:49pm

GENERAL NOTES

1. THE CONTRACTOR SHALL PROVIDE ALL MATERIALS AND LABOR AS REQUIRED TO PERFORM THE WORK AS INDICATED ON THE DRAWINGS AND IN THE SPECIFICATIONS. ALL WORK SHALL BE COMPLETED IN ACCORDANCE WITH ALL APPLICABLE FEDERAL, STATE, AND LOCAL CODES.
2. THE LOCATION, TYPE AND SIZE OF EXISTING PIPES, DUCTS, CONDUITS AND OTHER UNDERGROUND STRUCTURES SHOWN ON THE DRAWINGS ARE NOT WARRANTED TO BE EXACT, NOR IS IT WARRANTED THAT ALL UNDERGROUND STRUCTURES ARE SHOWN. CONTRACTOR SHALL FIELD VERIFY ALL LOCATIONS, SIZES AND DEPTHS.
3. THE CONTRACTOR SHALL COORDINATE ALL CONSTRUCTION WITH THE LOWELL REGIONAL WATER UTILITY, LOWELL REGIONAL WASTEWATER UTILITY AND UTILITY COMPANIES.
4. ALL WATER SYSTEM FLOWS MUST BE MAINTAINED DURING CONSTRUCTION. COORDINATE ALL PROCESS DISTURBANCES WITH OWNER. PROVIDE A MINIMUM OF TWO WEEKS NOTICE PRIOR TO ANY REQUIRED SHUT DOWNS.
5. RESTORE ALL AREAS DISTURBED BY CONTRACTOR'S OPERATIONS TO ORIGINAL CONDITION UNLESS NOTED OTHERWISE (GRAVEL, PAVEMENT, GRASS, ETC.).
6. ALL NEW BURIED PIPE SHALL HAVE MINIMUM 5 FEET OF COVER UNLESS NOTED OTHERWISE OR APPROVED BY THE ENGINEER. BURIED PIPE WITH LESS THAN 5 FEET OF COVER SHALL HAVE A MINIMUM OF 2" OF RIGID INSULATION WITH AN R–VALUE OF R–17 INSTALLED.
7. PROPERLY PROTECT AND DO NOT DISTURB PROPERTY IRONS AND MONUMENTS. IF DISTURBED, THE PROPERTY MONUMENT WILL BE RESET, AT THE CONTRACTOR'S EXPENSE, BY A REGISTERED LAND SURVEYOR APPROVED BY THE ENGINEER.
8. THE CONTRACTOR SHALL TAKE ALL NECESSARY PRECAUTIONS TO PREVENT EQUIPMENT FLUIDS FROM REACHING ANY WATER. ANY INADVERTENT FLUID DISCHARGES SHALL BE IMMEDIATELY CLEANED FROM THE WATERS USING WHATEVER MEANS NECESSARY, AS DETERMINED BY THE ENGINEER.
9. SUPPORT ALL PIPING AS DETAILED OR SPECIFIED INCLUDING SMALL DIAMETER PIPE, TUBING AND CONDUIT.
10. ALL PROCESS EQUIPMENT SHALL BE INSTALLED IN ACCORDANCE WITH MANUFACTURER'S RECOMMENDATIONS AND AS DIRECTED.
11. ALL CHEMICAL FEED SYSTEM PIPING, SAMPLE PIPING, ALL SMALL DIAMETER PIPING, AND EQUIPMENT ELECTRICAL AND CONTROL WIRING SHOWN SCHEMATICALLY ON THE DRAWINGS SHALL BE FIELD LOCATED WITH APPROVAL BY THE ENGINEER. CONTRACTOR SHALL COORDINATE ACTUAL LOCATION WITH THE ENGINEER TO INSURE NEAT PLACEMENT AND AVOID CONFLICTS.
12. PIPING SHALL BE INSTALLED IN A MANNER TO PRESERVE AS MUCH WORKING SPACE AS POSSIBLE AROUND EQUIPMENT. UNLESS INDICATED OTHERWISE, INSTALL PIPING LEVEL TO FLOOR AND PARALLEL WITH WALLS AND EQUIPMENT.
13. CONCRETE EQUIPMENT PADS WILL BE PROVIDED IN THE SIZE AND LOCATION AS INDICATED IN THE MECHANICAL DRAWINGS AND AS DETAILED ON STRUCTURAL DRAWING(S). MOUNT EQUIPMENT AS INDICATED AND IN ACCORDANCE WITH MANUFACTURER'S RECOMMENDATIONS.
14. ALL PIPE PENETRATIONS OF THE CONCRETE FOUNDATION AND BETWEEN LIQUID CONTAINING STRUCTURES SHALL HAVE DOUBLE LINK–SEAL CONNECTION AS DETAILED, UNLESS NOTED OTHERWISE.
15. THE CONTRACTOR SHALL PROVIDE A SEDIMENT BASIN FOR ALL WATER PUMPED FROM EXCAVATIONS. THE CONTRACTOR SHALL SUBMIT SEDIMENT BASIN DESIGN FOR REVIEW/APPROVAL PRIOR TO BEGINNING ANY PROJECT WORK REQUIRING DEWATERING.
16. PROVIDE 10 FOOT HORIZONTAL SEPARATION BETWEEN WATER AND SEWER LINES. WHEN THIS IS NOT POSSIBLE, THE TOP OF THE SEWER SHALL BE 18 INCHES BELOW THE INVERT OF THE WATER LINE. IF THIS ALSO IS NOT POSSIBLE, THE SEWER PIPE SHALL BE WATER MAIN QUALITY (SDR 18 MIN.) AND PRESSURE TESTED AS SPECIFIED.
17. INSTALL THRUST RESTRAINTS AT ALL BENDS, TEES, AND HYDRANTS IN WATER MAINS.
18. EXISTING FACILITIES AND IMPROVEMENTS (I.E. GUARDRAILS, TREES, POLES, SIGNS, LIGHT POLES, MAIL BOXES, ETC.) SHALL BE REMOVED AND REPLACED OR PROTECTED AS REQUIRED DURING CONSTRUCTION UNLESS OTHERWISE NOTED. THE ASSOCIATED COSTS ARE INCIDENTAL TO THE PROJECT.
19. CONTRACTOR SHALL MAINTAIN TRAFFIC IN A SAFE MANNER AT ALL TIMES DURING CONSTRUCTION. THE CONTRACTOR SHALL MAKE EVERY EFFORT TO MAINTAIN CONTINUOUS TRAFFIC FLOW (MINIMUM OF ONE LANE) DURING CONSTRUCTION.
20. ALL SIDEWALK AND CURB DAMAGED DURING CONSTRUCTION SHALL BE REPLACED IN KIND AND SHALL CONFORM TO CITY OF LOWELL DPW OR MHD SPECIFICATIONS.
21. CONTRACTOR SHALL COMPACT TRENCHES IN 12–INCH LIFTS.
22. THE LOCATION OF EXISTING SUBSURFACE ROCK IS NOT KNOWN IN ALL LOCATIONS. IT SHALL BE THE RESPONSIBILITY OF THE CONTRACTOR TO MAKE HIS OWN DETERMINATION AS TO THE LOCATION OF SUBSURFACE ROCK.
23. WHERE NEW WATER MAINS OR APPURTENANCES ARE TO JOIN OR BE CONNECTED TO EXISTING PIPE, CONTRACTOR SHALL CUT AND REMOVE THE EXISTING PIPE AS NECESSARY TO INSTALL THE NEW WORK. PRIOR TO CONSTRUCTION, ALL EXISTING SIZES AND MATERIAL TYPES SHALL BE VERIFIED, USING TEST PITS IF REQUIRED.
24. DEFINITE LOCATIONS FOR NEW WATER MAINS, HYDRANTS, VALVES AND FITTINGS SHALL BE ESTABLISHED IN THE FIELD BY THE ENGINEER.
25. CONTRACTOR SHALL COORDINATE WITH AND NOTIFY THE LOWELL REGIONAL WATER UTILITY, LOWELL REGIONAL WASTEWATER UTILITY AND UTILITY COMPANIES PRIOR TO COMMENCING WORK TO ALLOW SUFFICIENT TIME TO LOCATE AND MARK THE LOCATION OF ALL BURIED UTILITIES. CONTRACTOR SHALL ALSO CONTACT "DIG SAFE", TELEPHONE NO. 888–344–7233, AT LEAST 72 HOURS PRIOR TO CONSTRUCTION. REPAIR OF ANY DAMAGED UTILITY WILL BE INCIDENTAL TO THE CONTRACT.
26. WATER MAIN TRENCHES SHALL HAVE THE TRAVELED WAY SURFACE RECLAIMED WITHIN THE TRENCH LIMITS UNLESS OTHERWISE NOTED. TRENCH SURFACE REMOVAL OPERATIONS SHALL NOT BE DONE BY BACK HOE, GRADUAL, JACKHAMMER, ROCK SAW OR OTHER RIPPING EQUIPMENT. TRENCH SURFACE REMOVAL SHALL BE PER CITY OF LOWELL DPW PERMIT MANUAL RECLAIMED MATERIAL SHALL BE STORED AND REUSED AS A PAVEMENT BASE COURSE.
27. BRACING OF UTILITY POLES WHERE REQUIRED SHALL BE INCIDENTAL TO THE INSTALLATION OF THE WATER MAIN, NO SEPARATE PAYMENT SHALL BE MADE.
28. LOWELL CITY BASE DATUM = USGS MEAN SEA LEVEL + 55.20 FT
29. CONTRACTOR SHALL MAINTAIN ACCESS TO BUILDINGS FOR OPERATING STAFF AT ALL TIMES.
30. NOT ALL AND ONLY CERTAIN TYPES OF PIPING SUPPORTS HAVE BEEN SHOWN ON THE DRAWINGS. PIPE SUPPORTS WHICH HAVE BEEN INDICATED ON THE DRAWINGS ARE SHOWN TO CONVEY THE INTENT OF THE PROCESS MECHANICAL DESIGN FOR A PARTICULAR SYSTEM. THE SUPPORTS WHICH HAVE BEEN SHOWN ARE NOT INTENDED TO REPRESENT A COMPLETE SYSTEM. ALL PIPING SUPPORTS, INCLUDING THOSE WHICH HAVE BEEN SHOWN FOR CONCEPTUAL PURPOSES, SHALL BE DESIGNED, FURNISHED, AND INSTALLED BY THE CONTRACTOR AS SPECIFIED AND AS APPROVED BY THE ENGINEER. ALL PIPING WHICH IS ADJACENT TO VALVES, COUPLINGS, INSTRUMENTS, EQUIPMENT, AND APPURTENANCES SHALL BE PROPERLY SUPPORTED AND/OR ANCHORED IN ACCORDANCE WITH THE RECOMMENDATIONS OF THE PIPING MANUFACTURER. ALL PIPING SHALL BE INDEPENDENTLY SUPPORTED. THE SUPPORT OF PIPING FOR OTHER ASSOCIATED PIPING SHALL NOT BE ACCEPTABLE UNDER ANY CIRCUMSTANCES.
31. NOT ALL AND ONLY CERTAIN TYPES OF VALVE AND GATE OPERATORS (EG. HAND WHEELS, CHAIN WHEELS, HAND CRANKS, MOTOR OPERATORS, LEVERS, ETC.) HAVE BEEN SHOWN FOR CLARITY. ALL VALVE AND GATE OPERATORS SHALL BE LOCATED TO ALLOW CONVENIENT AND UNOBSTRUCTED ACCESS FOR OPENING/CLOSING AS REQUIRED. THE FINAL INSTALLED ORIENTATION OF ALL OPERATORS SHALL BE AS APPROVED BY THE ENGINEER. UNDER NO CIRCUMSTANCES SHALL VALVES BE INSTALLED WITH OPERATORS ORIENTED IN THE VERTICAL DOWNWARD POSITIONS.
32. ALL PROCESS PIPING SYSTEMS SHALL BE PROVIDED WITH VENTS AND DRAINS AS REQUIRED AND AS INDICATED ON THE DRAWINGS. FIELD ROUTE DRAIN PIPING AS REQUIRED AND AS INDICATED ON THE DRAWINGS.
33. ALL PIPING SHALL BE INSTALLED SUCH THAT ANY PIPE, LAYER OF PIPING, OR EQUIPMENT CAN BE REMOVED WITHOUT DISTURBING REMAINING/ADJACENT PIPING AND ASSOCIATED PIPE SUPPORTS.
34. UNLESS OTHERWISE SPECIFIED OR INDICATED ON THE DRAWINGS ALL FLOOR, CONCRETE WALL/TANK, AND CMU WALL PENETRATIONS SHALL BE IN ACCORDANCE WITH THE DETAILS SHOWN ON THE STRUCTURAL DRAWINGS. IF APPROVED BY THE ENGINEER, THE CONTRACTOR MAY SUBSTITUTE ALTERNATE PENETRATION METHODS PROVIDED THAT THEY MEET THE INTENDED DESIGN REQUIREMENTS AND FUNCTIONALITY.
35. THE NUMBER OF UNIONS AND COUPLINGS SHOWN IS APPROXIMATE. THE CONTRACTOR SHALL PROVIDE ALL UNIONS OR DISMANTLING COUPLINGS WHETHER THEY HAVE BEEN SHOWN ON THE DRAWINGS OR NOT. UNIONS AND DISMANTLING COUPLINGS SHALL BE PROVIDED ON ALL PIPING WITH WELDED, THREADED, OR SOLVENT CEMENTED JOINTS: AT ALL EQUIPMENT CONNECTIONS, AT A MINIMUM OF EVERY 50 LINEAR FEET, AND IN BRANCH LINES TO ALLOW CONVENIENT REMOVAL OF PIPING, EQUIPMENT, AND APPURTENANCES.
36. ALL BURIED CONNECTIONS TO ALL STRUCTURES SHALL BE PROVIDED WITH SLEEVE TYPE FLEXIBLE COUPLINGS LOCATED APPROXIMATELY FOUR (4) FEET FROM THE RESPECTIVE EXTERIOR WALL OF EACH STRUCTURE. SLEEVE TYPE COUPLINGS SHALL ALLOW FOR DIFFERENTIAL SETTLEMENT OF INTERIOR AND EXTERIOR PIPING. ALL COUPLED CONNECTIONS SHALL BE LOCATED ON THE EXTERIOR OF STRUCTURES IN THE YARD. PROVIDE TRANSITION SLEEVE TYPE COUPLINGS AS REQUIRED AND AS INDICATED ON THE DRAWINGS TO ACCOMMODATE PIPING TRANSITIONS OF DIFFERENT SIZES AND MATERIALS. ALL STAINLESS STEEL PIPING SHALL BE CONNECTED USING STAINLESS STEEL SLEEVE COUPLINGS.

SHEET INDEX

DWG NO.	DESCRIPTION
GENERAL	
G–000	COVER SHEET
G–001	SHEET INDEX, GENERAL NOTES, LEGEND AND ABBREVIATIONS
CIVIL	
C–101	RAW WATER PUMP STATION SITE PLAN
C–301	STACKPOLE STREET PUMP STATION DEMOLITION PLAN
C–302	STACKPOLE STREET PUMP STATION SITE PLAN
C–303	WATER MAIN UPGRADES NORTH OF MERRIMACK RIVER
C–501	CIVIL DETAILS 1
C–502	CIVIL DETAILS 2
C–503	CIVIL DETAILS 3
STRUCTURAL	
S–001	STRUCTURAL LEGEND ABBREVIATIONS, & NOTES
S–101	RAW WATER PUMP STATION BUILDING ELEVATIONS – 1
S–102	RAW WATER PUMP STATION BUILDING ELEVATIONS – 2
S–103	RAW WATER PUMP STATION PLANS, SECTIONS, & DETAILS
S–104	RAW WATER PUMP STATION ROOFING PLAN & NOTES
S–105	RAW WATER PUMP STATION ROOFING SECTIONS & DETAILS
S–106	RAW WATER PUMP STATION SCHEDULES & DETAILS
S–201	VERTICAL WHEELCHAIR LIFT PLANS AND SECTIONS (SRF INELIGIBLE)
S–301	STACKPOLE STREET PUMP STATION PLAN, ELEVATION, SECTIONS, & DETAILS
MECHANICAL	
M–201	RAW & FINISH WATER FLOW VAULT MODIFICATIONS
M–202	RAW WATER FLOW CONTROL VAULTS MODIFICATIONS
M–203	GAC FILTER ROOM MODIFICATIONS
M–204	SAND MEDIA FILTER ROOM MODIFICATIONS
M–205	DUAL MEDIA FILTER ROOM MODIFICATIONS
M–206	CHEMICAL FEED ROOM MODIFICATIONS
M–301	STACKPOLE STREET PUMP STATION PLAN AND SECTIONS
M–501	INSTRUMENTATION MOUNTING PANEL ELEVATIONS
HVAC	
H–001	HVAC LEGEND & GENERAL NOTES
H–201	WATER TREATMENT PLANT HVAC DEMOLITION PLAN
H–202	WATER TREATMENT PLANT HVAC ROOF & FLOOR PLANS
H–203	HVAC SCHEDULES & BOILER ROOM PART PLAN
H–501	HVAC DETAILS 1
H–502	HVAC DETAILS 2
ELECTRICAL	
E–001	ELECTRICAL LEGEND
E–101	RAW WATER PUMP STATION FLOOR PLAN & EXTERIOR LIGHTING
E–201	WATER FILTRATION PLANT ELECTRICAL SITE PLAN
E–201A	VERTICAL WHEELCHAIR LIFT DETAILS (SRF INELIGIBLE)
E–202	WATER TREATMENT PLANT ELECTRICAL ONE–LINE DIAGRAM AND PANEL SCHEDULES
E–211	10 MGD PLANT ELECTRICAL PLANS
E–212	20 MGD PLANT ELECTRICAL PLAN
E–213	FLOW CONTROL VAULTS ELECTRICAL PLANS
E–214	GAC FILTER ELECTRICAL PLANS
E–215	SAND MEDIA FILTER ELECTRICAL PLANS
E–216	DUAL MEDIA FILTER ELECTRICAL PLANS
E–221	WATER TREATMENT PLANT INSTRUMENTATION & CONTROLS RISER DIAGRAMS
E–222	WATER TREATMENT PLANT INSTRUMENTATION & CONTROLS RISER DIAGRAMS
E–301	STACKPOLE STREET PUMP STATION ELECTRICAL SITE PLANS
E–302	STACKPOLE STREET PUMP STATION ONE LINE & PANEL SCHEDULE
E–311	STACKPOLE STREET PUMP STATION ELECTRICAL PLANS
E–321	STACKPOLE STREET PUMP STATION BUILDING SYSTEMS, INSTRUMENTATION & CONTROLS RISER DIAGRAM
E–401	ELECTRICAL DETAILS
E–402	STACKPOLE BOOSTER STATION ANTENNA INSTALLATION DETAILS

GENERAL LEGEND

- PAVEMENT CENTERLINE
- EXISTING SANITARY SEWER
- ASSUMED EXISTING MANHOLE LOCATION
- EXISTING MANHOLE
- EXISTING STORM DRAIN
- EXISTING CATCH BASIN
- EXISTING WATER MAIN
- PROPOSED WATER MAIN
- EXISTING UNDERGROUND ELECTRICAL CABLE
- EXISTING UNDERGROUND TELEPHONE CABLE
- PROPOSED SILT FENCE
- EXISTING STEEL GUARDRAIL
- EXISTING POST AND CABLE GUARDRAIL
- PROPOSED STEEL GUARDRAIL
- EDGE OF EXISTING GRAVEL DRIVE
- EDGE OF EXISTING PAVED DRIVE
- EXISTING CONTOUR
- PROPOSED CONTOUR
- STONEWALL
- TREE LINE
- RETAINING WALL
- FENCE
- FENCE
- PROPERTY LINE / RIGHT OF WAY
- EXISTING GAS MAIN
- EXISTING GAS VALVE
- EDGE OF WATER
- EDGE OF STREAM
- EXISTING PROPERTY MONUMENT
- IRON PIN, PIPE, OR REBAR FOUND
- EXISTING GATE VALVE
- PROPOSED GATE VALVE
- EXISTING BUTTERFLY GATE VALVE
- PROPOSED BUTTERFLY GATE VALVE
- EXISTING CURB BOX
- PROPOSED CURB BOX
- COUPLING
- PROPOSED REDUCER
- EXISTING UTILITY POLE
- HYDRANT TEE AND VALVE ASSEMBLY
- TEST PIT REQUIRED
- SECTION LABEL (A / M–1): A INDICATES WHERE SECTION IS TAKEN; M–1 INDICATES WHERE SECTION IS DRAWN
- LIMIT OF WORK
- PROPOSED LINE STOP
- PRESSURE GAUGE
- CHECK VALVE
- BALL VALVE
- UNION
- ROTAMETER
- NEEDLE VALVE
- Y–STRAINER

ABBREVIATIONS

@	AT
ADJ.	ADJUSTABLE
ALUM.	ALUMINUM
APA	AMERICAN PLYWOOD ASSOCIATION
APPROX.	APPROXIMATE
ASS'Y	ASSEMBLY
ASTM	AMERICAN SOCIETY OF TESTING MATERIALS
B	BEAM
B	BORING
BLDG.	BUILDING
BOT	BOTTOM
C	COLUMN
C.E.	CONTINUOUS END
CB	CATCH BASIN
CI	CAST IRON
CJ	CONTROL JOINT
CK.	CHECKED
CLR.	CLEAR
CLF	CHAIN LINK FENCE
CLDI	CEMENT–LINED DUCTILE IRON
CMP	CORRUGATED METAL PIPE
CMU	CONCRETE MASONRY UNIT
COL.	COLUMN
CONC.	CONCRETE
CONT.	CONTINUOUS
COR	CORNER
CORR.	CORRUGATED
CPE	CORRUGATED POLYETHYLENE
CU	COPPER
CY	CUBIC YARDS
D	DIAMETER
D.E.	DISCONTINUOUS END
D.I.	DUCTILE IRON
DES.	DESIGNED
DIA.	DIAMETER
DIAG.	DIAGONALLY
DISCONT.	DISCONTINUOUS
DR.	DRAWN
DRI	DOUBLE RING INFILTROMETER
DRWGS.	DRAWINGS
E	EASTING
EA.	EACH
EFFL.	EFFLUENT
EL.	ELEVATION
ELECT.	ELECTRICAL
ELEV.	ELEVATION
EMBED.	EMBEDDMENT
EPC	ELASTOMER PIPE CONNECTOR
EQ.	EQUALIZATION
EXP.	EXPANSION
F	FOOTING
FCA	FLANGED COUPLING ADAPTOR
FD	FLOOR DRAIN
FF	FINISH FLOOR
FIN	FINISH
FIN. FLR.	FINISH FLOOR
FL.	FLANGE
FM	FORCE MAIN
FRP	FIBERGLASS REINFORCED PLASTIC
FT.	FOOT
FTG.	FOOTING
FTG.	FITTING
G	GAS
GALV.	GALVANIZED
H	HATCH
H	HEIGHT
HOR.	HORIZONTAL
HORIZ.	HORIZONTAL
HP	HIGH POINT
HVAC	HEATING, VENTILATING AND AIR CONDITIONING
IMFO	INTEGRALLY MOLDED FLANGED OPENING
INV.	INVERT
L	LENGTH
L.L.V.	LONG LEG VERTICAL
LB	POUND
LG.	LONG
LP	LOW POINT
M.O.	MASONRY OPENING
MAX.	MAXIMUM
MECH.	MECHANICAL
MH	MANHOLE
MIN.	MINIMUM
MPH	MILES PER HOUR
MR	MONORAIL
MW	MONITORING WELL
N	NORTHING
NIC	NOT IN CONTRACT
N.T.S.	NOT TO SCALE
#	NUMBER
NO.	NUMBER
NOM.	NOMINAL
O.C.	ON CENTER
O.C.E.F.	ON CENTER EACH FACE
O.C.E.W.	ON CENTER EACH WAY
O.D.	OUTSIDE DIAMETER
O.I.T.	OPERATOR INTERFACE TERMINAL
OZ.	OUNCE
PL	PLATE
PL	PROPERTY LINE
PC	POINT OF CURVATURE
PCC	POINT OF COMPOUND CURVE
PCF	PER CUBIC FOOT
PE	POLYETHYLENE
PIC	POST INDICATOR VALVE
PRC	POINT OF REVERSE CURVE
PSF	POUNDS PER SQUARE FOOT
PSI	POUNDS PER SQUARE INCH
PT	POINT OF TANGENCY
PVC	POLYVINYL CHLORIDE
PZ	PIEZOMETER
RCP	REINFORCED CONCRETE PIPE
REINF.	REINFORCEMENT
RIBS	RAPID INFILTRATION BASINS
S	SEWER
S	SLOPE
S.S.	STAINLESS STEEL
SCH.	SCHEDULE
SECT	SECTION
SHLDR.	SHOULDER
SHT.	SHEET
SP. AL.	SPECIAL ALUMINUM
SQ.	SQUARE
SUP.	SUPPORT
TEMP.	TEMPERATURE
THD.	THREADED
TMB	TEMPORARY BENCH MARK
TOC	TOP OF CONCRETE
TP	TEST PIT
TYP.	TYPICAL
U.N.O.	UNLESS NOTED OTHERWISE
UGE	UNDERGROUND ELECTRIC
UGT	UNDERGROUND TELEPHONE
UV	ULTRAVIOLET
V	VELOCITY
VERT.	VERTICAL
W	WATER
W	WIDE
W/	WITH
YR.	YEAR

ISSUE FOR BID

WOODARD & CURRAN
980 Washington Street, Suite 325N
Dedham, Massachusetts 02026
800.446.5518 | www.woodardcurran.com
COMMITMENT & INTEGRITY DRIVE RESULTS

THIS DOCUMENT IS THE PROPERTY OF WOODARD & CURRAN INC. AND ITS CLIENT. REPRODUCTION OR MODIFICATION WITHOUT WRITTEN PERMISSION IS PROHIBITED.

COMMONWEALTH OF MASSACHUSETTS — ROBERT C. CHAFFELL — SANITARY — No. 35616 — REGISTERED PROFESSIONAL ENGINEER

REV	DESCRIPTION	DATE
B	ISSUE FOR BID	3/11/15
A	FOR MASSDEP REVIEW	07/18/14

DESIGNED BY: BCC | CHECKED BY: BCC
DRAWN BY: JAR | 224802–G001.DWG

SHEET INDEX, GENERAL NOTES, LEGEND AND ABBREVIATIONS

LOWELL REGIONAL WATER UTILITY
LOWELL, MASSACHUSETTS

WATER SYSTEM IMPROVEMENTS

JOB NO.: 224802.20
DATE: MARCH 2015
SCALE: NONE
SHEET: 2 OF 51

G-001

24x36 SHEET 1:1
C:\Users\rampino\appdata\local\temp\AcPublish_5844\Unsaved Drawing2.dwg, Mar 02, 2015 – 6:48am

24x36 SHEET
1:1.00003

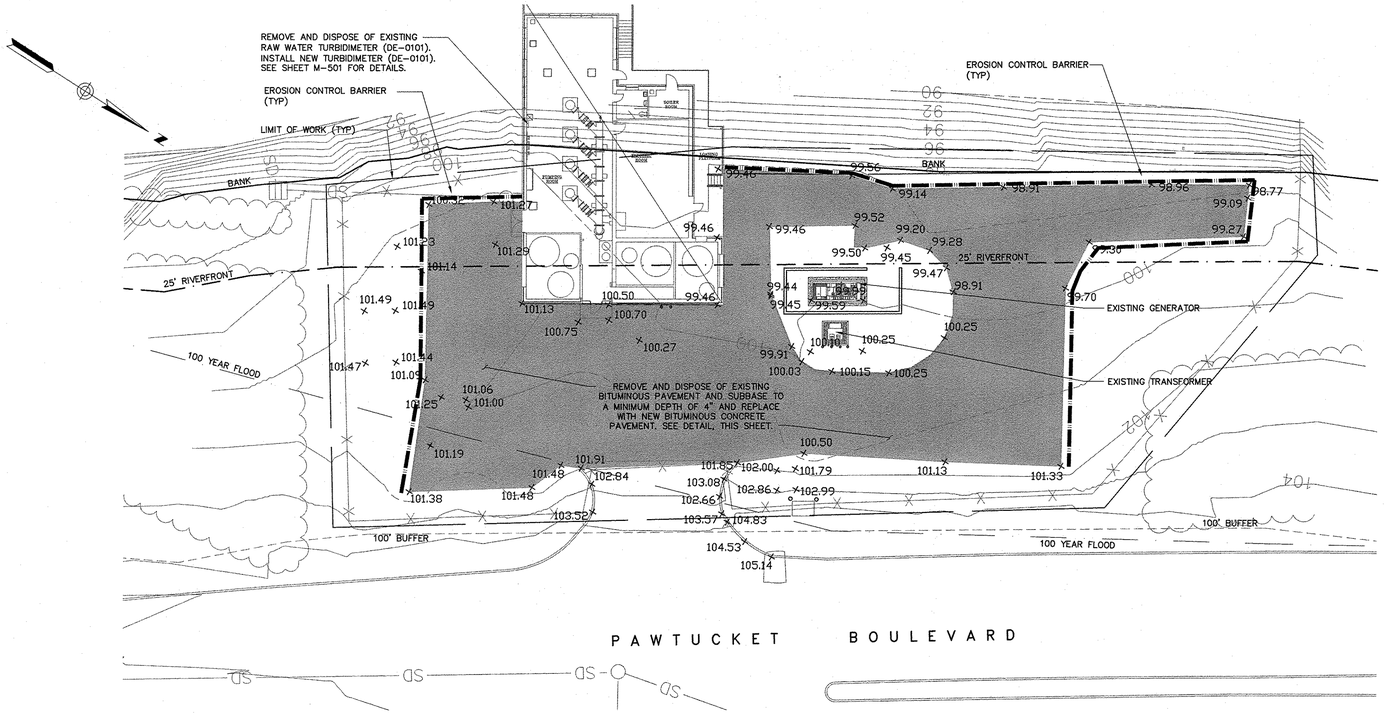

RAW WATER PUMP STATION
SITE PLAN

SCALE: 1" = 20'

NOTES:

1. BASE PLAN COMPILED FROM 2009 SURVEY CONDUCTED BY KNIGHT HILL LAND SURVEYING SERVICES OF NEWINGTON, NH AND FIELD OBSERVATIONS.
2. ELEVATIONS SHOWN REFER TO LOWELL CITY BASE (LCB) DATUM.
3. BANK, RIVERFRONT, AND 100' BUFFER BOUNDARIES OBTAINED FROM NOTICE OF INTENT MASSDEP FILE NO. 206-0645 DRAWINGS FOR WATER UTILITY WORK CONDUCTED AT THE LOWELL REGIONAL WATER UTILITY'S RAW WATER PUMP STATION UNDER ORDER OF CONDITIONS ISSUED SEPTEMBER 2009.
4. 100 YEAR FLOOD BOUNDARY DIGITIZED FROM MASS GIS OLIVER 2013.
5. CONTRACTOR SHALL MAINTAIN ACCESS TO BUILDINGS FOR OPERATING STAFF AT ALL TIMES.
6. CONTRACTOR SHALL INSTALL TEMPORARY INLET PROTECTION IN ALL CATCH BASINS TO PREVENT SEDIMENT FROM ENTERING DRAINAGE INFRASTRUCTURE. SEE DETAIL, THIS SHEET.
7. ANY AREA DISTRUBED BY CONTRACTOR OUTSIDE LIMITS OF PAVEMENT SHALL BE RESTORED TO ORGINAL CONDITION AT NO EXTRA COST TO THE OWNER.
8. CONTRACTOR SHALL NOT EXCEED EXISTING SURFACE GRADES.
9. CONTRACTOR SHALL ADHERE TO ORDER OF CONDITIONS (MASSDEP FILE #206-0722) IN SECTION 01 15 00 OF THE SPECIFICATIONS.

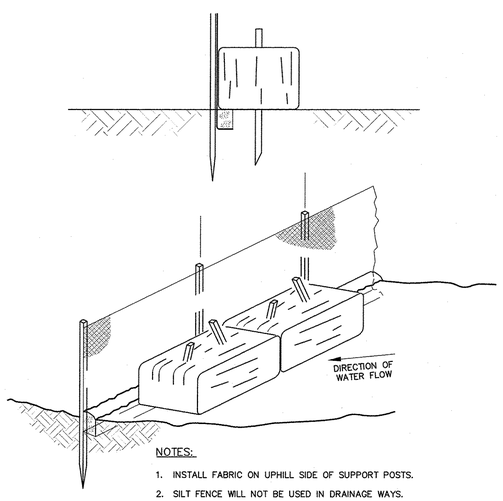

NOTES:

1. INSTALL FABRIC ON UPHILL SIDE OF SUPPORT POSTS.
2. SILT FENCE WILL NOT BE USED IN DRAINAGE WAYS.
3. CONTRACTOR TO REMOVE SILT AS NECESSARY TO MAINTAIN FABRIC EFFECTIVENESS.

EROSION CONTROL BARRIER

N.T.S.

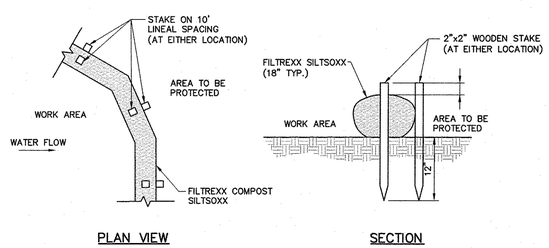

PLAN VIEW

SECTION

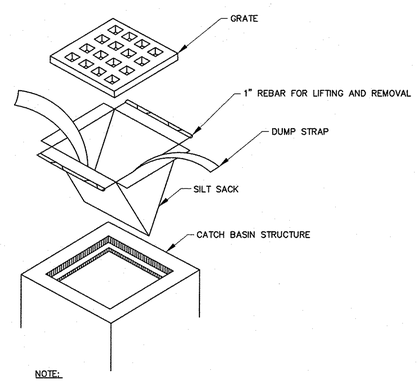

NOTE:

1. INSTALL SILTSACK PER MANUFACTURER'S INSTRUCTIONS AND RECOMMENDATIONS. EMPTY OR REMOVE SEDIMENT FROM SILTSACK WHEN RESTRAINT CORD IS NO LONGER VISIBLE. CLEAN, RINSE, AND REPLACE AS NEEDED.
2. SILT SACKS TO BE INSTALLED DURING CONSTRUCTION OPERATIONS WHEN THE POTENTIAL FOR SEDIMENT TO ENTER EXISTING & PROPOSED BASINS EXISTS.

TEMPORARY INLET PROTECTION

N.T.S.

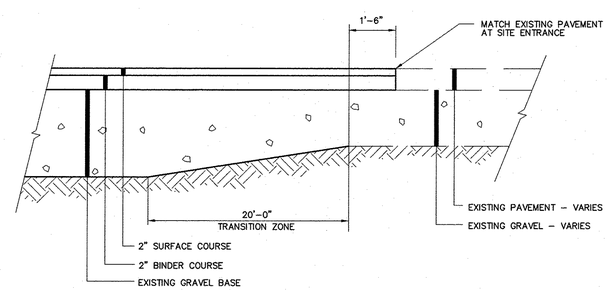

RAW WATER PUMP STATION
BITUMINOUS PAVEMENT & BUTT JOINT DETAIL

N.T.S.

ISSUE FOR BID

980 Washington Street, Suite 325N
Dedham, Massachusetts 02026
800.446.5518 | www.woodardcurran.com
WOODARD & CURRAN
COMMITMENT & INTEGRITY DRIVE RESULTS

THIS DOCUMENT IS THE PROPERTY OF WOODARD & CURRAN INC., AND ITS CLIENT. REPRODUCTION OR MODIFICATION WITHOUT WRITTEN PERMISSION IS PROHIBITED.

REV	DESCRIPTION	DATE
B	ISSUE FOR BID	3/11/15
A	FOR MASSDEP REVIEW	07/18/14

DESIGNED BY: BCC | CHECKED BY: BCC
DRAWN BY: JAR | 224802-C-101.DWG

RAW WATER PUMP STATION
SITE PLAN

LOWELL REGIONAL WATER UTILITY
LOWELL, MASSACHUSETTS

WATER SYSTEM IMPROVEMENTS

JOB NO.: 224802.20
DATE: MARCH 2015
SCALE: AS NOTED
SHEET: 3 OF 51

C-101

\\wc\shares\Projects\224802 Lowell MA - Water System Improvement REF 2011\wip\Drawings\Civil\224802-C-101.dwg, Mar 02, 2015 - 6:49pm

24x36 SHEET
1:1.00003

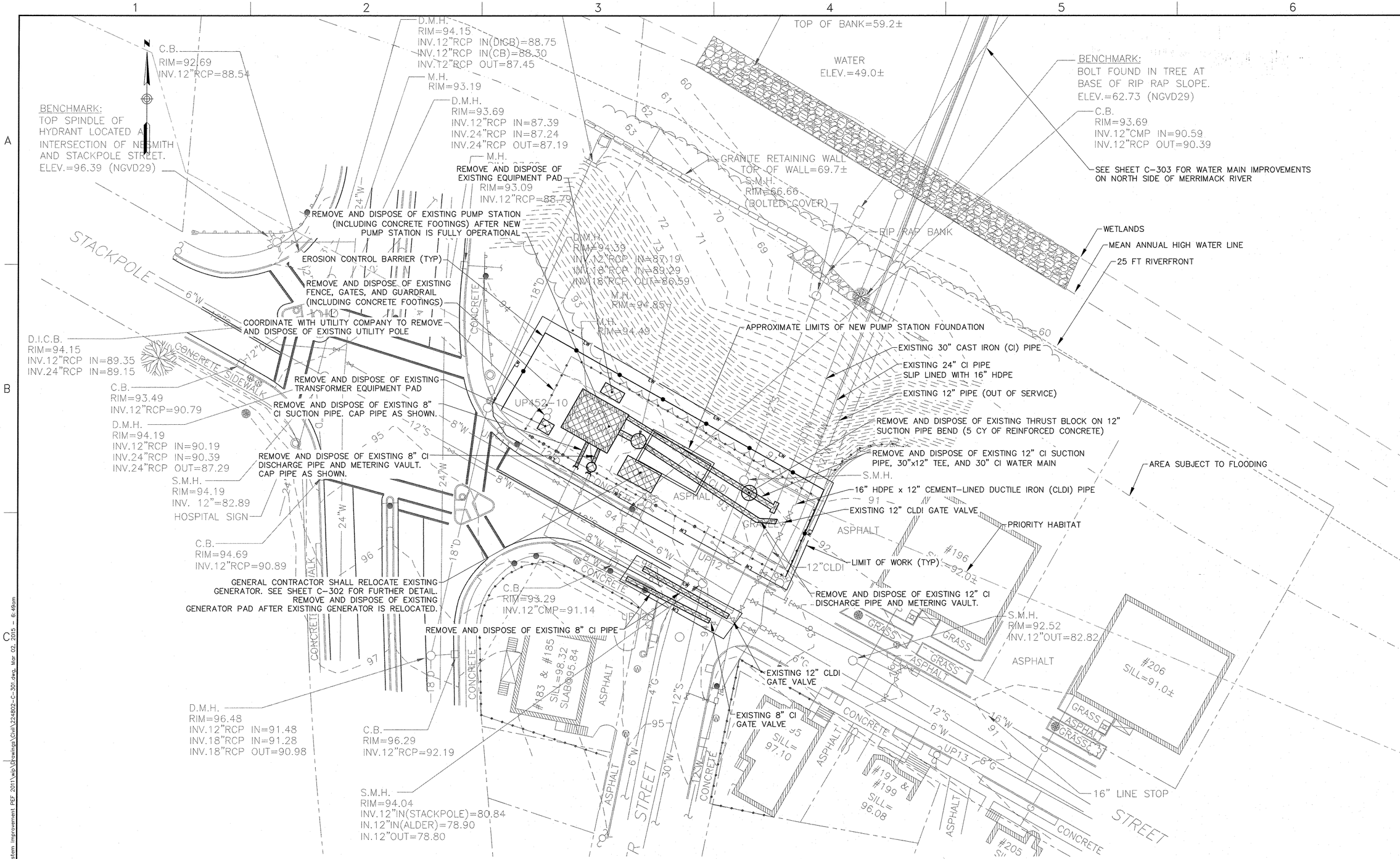

NOTES:

1. RESOURCE AREAS WERE DERIVED FROM OLIVER MassGIS ONLINE MAPPING TOOL.
2. THE EXISTING PUMP STATION SHALL REMAIN IN SERVICE. SCHEDULED SHUTDOWNS REQUIRE WRITTEN APPROVAL OF THE ENGINEER. SEE SPECIFICATION SECTION 01 11 00 FOR FURTHER DETAILS.
3. CUT AND CAP EXISTING PUMP STATION SEWER CONNECTION.
4. CONTRACTOR SHALL PROVIDE TEMPORARY 6 FT CONSTRUCTION FENCING AROUND PROPERTY AFTER EXISTING FENCE IS DEMOLISHED UNTIL NEW FENCING AND GATES ARE INSTALLED.
5. CONTRACTOR SHALL INSTALL TEMPORARY INLET PROTECTION IN ALL CATCH BASINS IN THE VICINITY OF THE PUMP STATION TO PREVENT SEDIMENT FROM ENTERING DRAINAGE INFRASTRUCTURE. TEMPORARY INLET PROTECTION SHALL REMAIN THROUGHOUT CONSTRUCTION AND BE MAINTAINED AS RECOMMENDED BY MANUFACTURER. SEE DETAIL ON SHEET C-101.
6. REMOVAL AND DISPOSAL ACTIVITIES MUST BE CONDUCTED IN ACCORDANCE WITH SPECIFICATIONS AND ALL APPLICABLE LOCAL, STATE, AND FEDERAL LAWS.
7. ASBESTOS & LEAD INSPECTION REPORT IS IN SECTION 01 15 00.

20' 0 20' 40'
BAR SCALE
1" = 20'
CHECK GRAPHIC SCALE BEFORE USING

ISSUE FOR BID

980 Washington Street, Suite 325N
Dedham, Massachusetts 02026
800.446.5516 | www.woodardcurran.com
WOODARD & CURRAN
COMMITMENT & INTEGRITY DRIVE RESULTS

THIS DOCUMENT IS THE PROPERTY OF WOODARD & CURRAN INC., AND ITS CLIENT. REPRODUCTION OR REDISTRIBUTION WITHOUT WRITTEN PERMISSION IS PROHIBITED.

COMMONWEALTH OF MASSACHUSETTS
PROFESSIONAL ENGINEER
JEFFREY C. CHAPELL
No. 37815
REGISTERED PROFESSIONAL ENGINEER
3/2/15

REV	DESCRIPTION	DATE
A	FOR MASSDEP REVIEW	07/18/14
B	ISSUE FOR BID	3/11/15

DESIGNED BY: BCC
DRAWN BY: JAR
CHECKED BY: BCC
224802-C-301.dwg

STACKPOLE STREET PUMP STATION
DEMOLITION PLAN

LOWELL REGIONAL WATER UTILITY
LOWELL, MASSACHUSETTS

WATER SYSTEM IMPROVEMENTS

JOB NO.:224802.20
DATE: MARCH 2015
SCALE: AS NOTED
SHEET: 4 OF 51

C-301

\\wc\shared\Projects\224802 Lowell MA - Water System Improvement PEF 2011\wip\Drawings\Civil\224802-C-301.dwg, Mar 02, 2015 - 8:49am

24x36 SHEET
1:1.00003

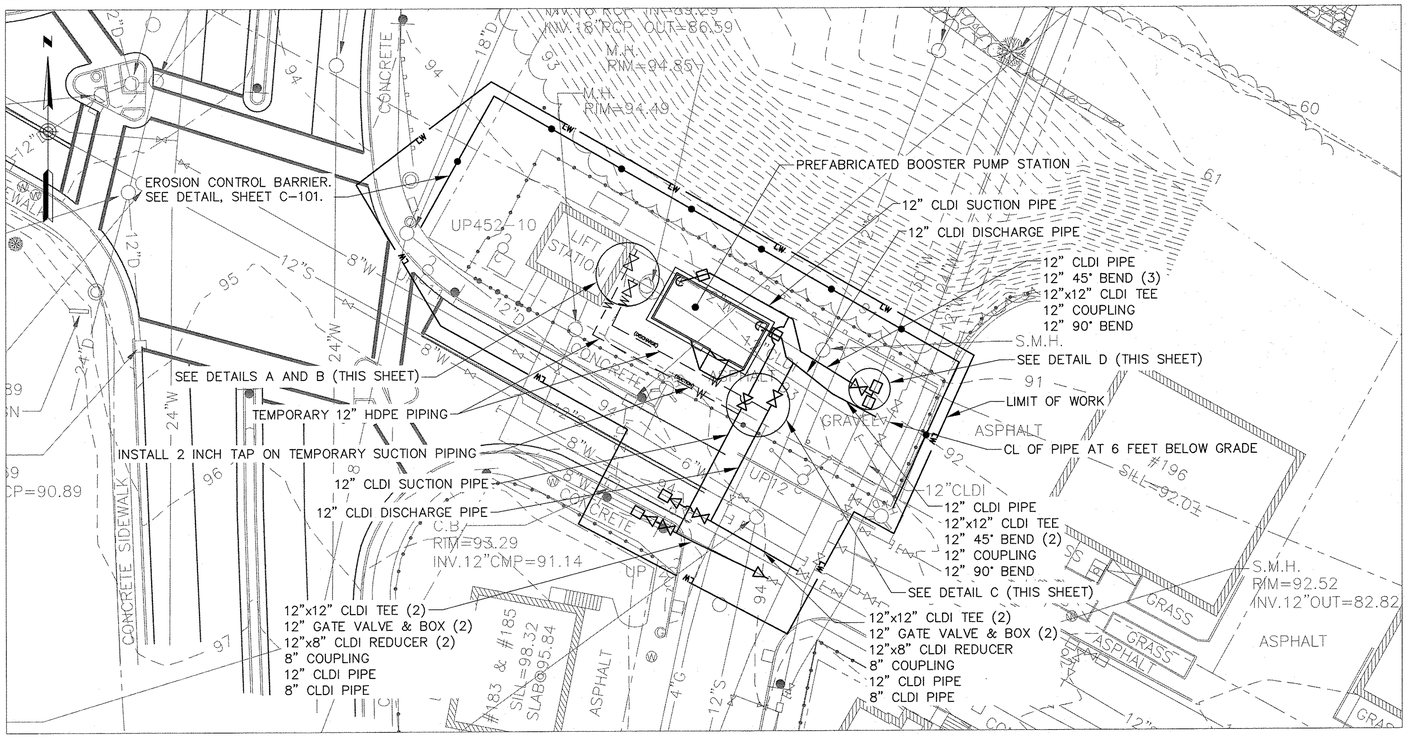

YARD PIPING PLAN

SCALE: 1" = 20'-0"

BAR SCALE
1" = 20'
CHECK GRAPHIC SCALE BEFORE USING

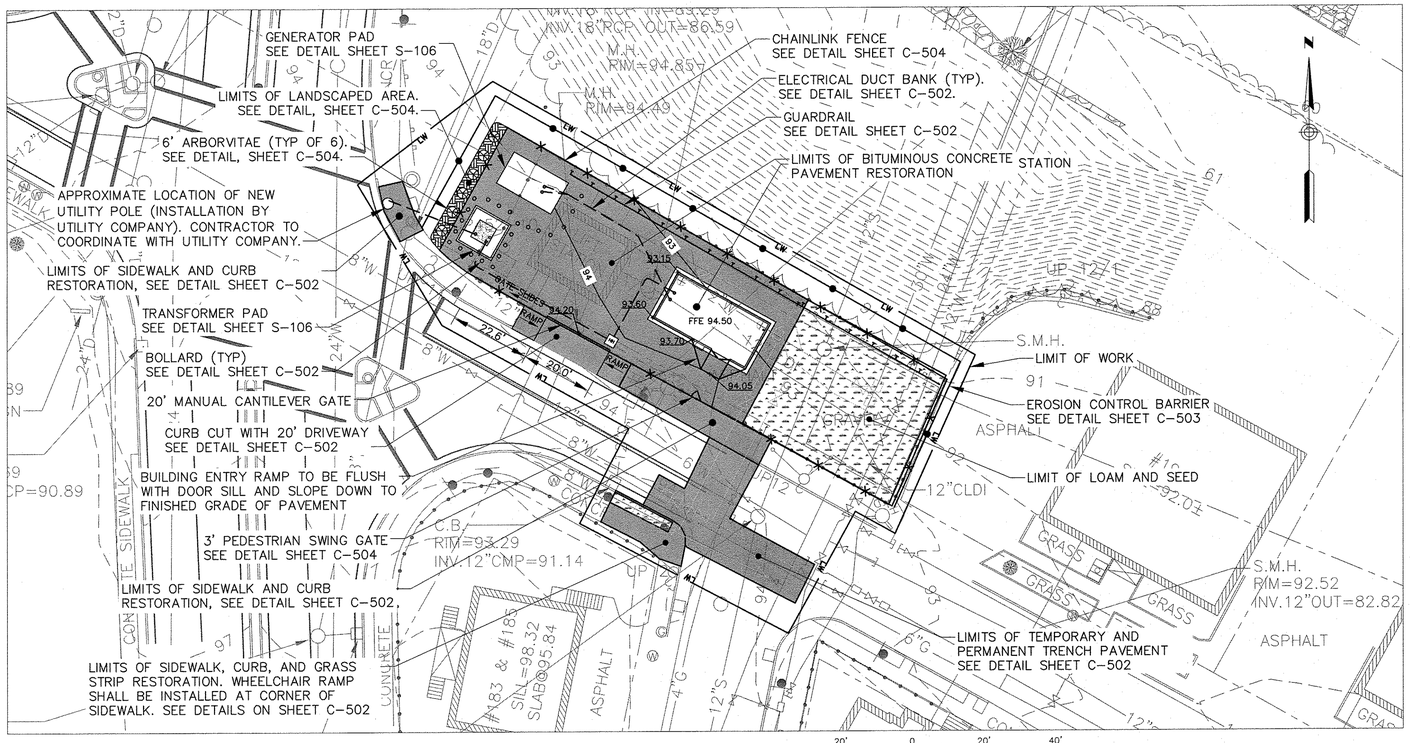

SITE/CIVIL PLAN

SCALE: 1" = 20'-0"

BAR SCALE
1" = 20'
CHECK GRAPHIC SCALE BEFORE USING

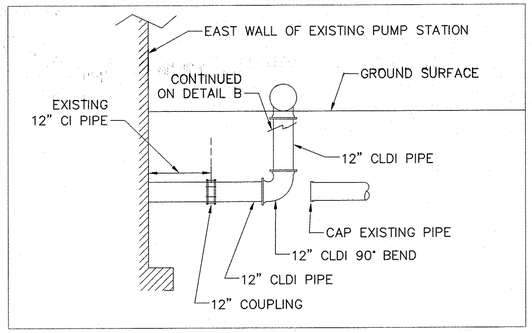

DETAIL A – TEMPORARY PIPING CONNECTION TO EXISTING PIPING (TYP OF 2)

NOT TO SCALE

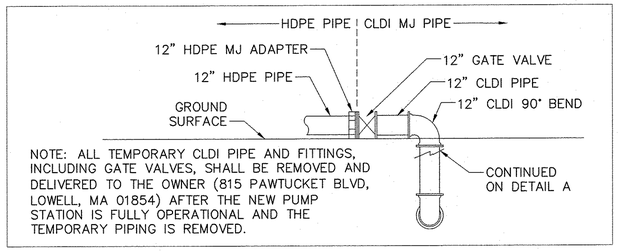

NOTE: ALL TEMPORARY CLDI PIPE AND FITTINGS, INCLUDING GATE VALVES, SHALL BE REMOVED AND DELIVERED TO THE OWNER (815 PAWTUCKET BLVD, LOWELL, MA 01854) AFTER THE NEW PUMP STATION IS FULLY OPERATIONAL AND THE TEMPORARY PIPING IS REMOVED.

DETAIL B – TEMPORARY PIPING ISOLATION VALVE (TYP OF 2)

NOT TO SCALE

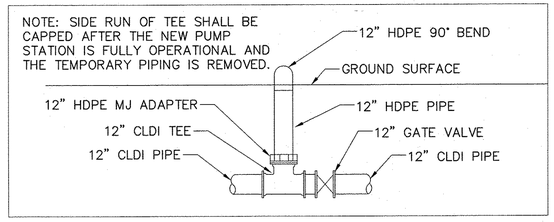

DETAIL C – TEMPORARY PIPING CONNECTION TO NEW PIPING (TYP OF 2)

NOT TO SCALE

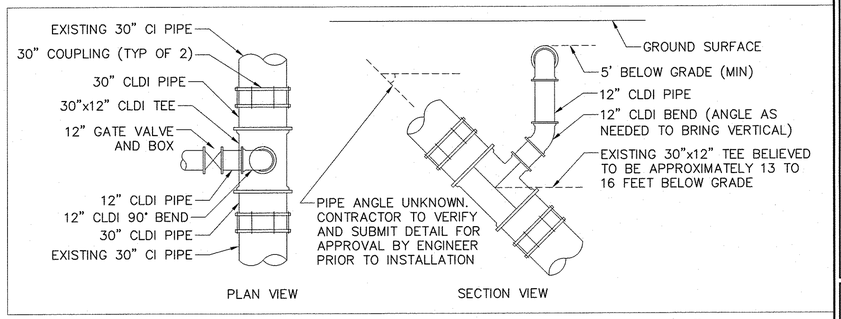

DETAIL D – NEW SUCTION PIPING CONNECTION TO EXISTING 30" CI MAIN

NOT TO SCALE

NOTES:

1. THE EXISTING PUMP STATION SHALL REMAIN IN SERVICE. SCHEDULED SHUTDOWNS REQUIRE WRITTEN APPROVAL OF THE ENGINEER. SEE SPECIFICATION SECTION 01 11 00 FOR FURTHER DETAILS.
2. TRANSFORMER PAD AND BOLLARD INSTALLATION SHALL MEET THE MOST RECENT VERSION OF THE ELECTRICAL SYSTEM BULLETIN NO. 759B. BOLLARD INSTALLATION AROUND TRANSFORMER SHALL BE COORDINATED WITH UTILITY TRENCH INSPECTOR.
3. CONTRACTOR SHALL SUBMIT DRIVEWAY PERMIT APPLICATION TO LOWELL ENGINEERING DEPARTMENT. A DRAFT PERMIT APPLICATION IS INCLUDED IN THE SPECIFICATIONS.
4. ALL BURIED PIPE SHALL BE MECHANICAL JOINT WITH RESTRAINED FITTINGS.
5. THE EXISTING GENERATOR SHALL BE RELOCATED TO MAKE ROOM FOR THE CONSTRUCTION OF THE PROPOSED PUMP STATION. THE GENERATOR RELOCATION SHALL BE BY THE GENERAL CONTRACTOR. INSTALLATION AND STARTUP OF THE GENERATOR AT THE NEW LOCATION SHALL BE PER THE MANUFACTURER'S INSTRUCTIONS. CONTRACTOR SHALL PROVIDE TWO (2) DAYS OF ON SITE SERVICES BY MANUFACTURER'S CERTIFIED REPRESENTATIVE FOR STARTUP AND TESTING OF RELOCATED GENERATOR FOR (1) RECONNECTION TO EXISTING PUMP STATION AND (2) CONNECTION TO NEW PUMP STATION.
6. APPROVED TRAFFIC PLAN AND ROAD OPENING PERMIT ARE REQUIRED FROM THE CITY BEFORE BEGINNING WORK IN STREET.
7. CONTRACTOR SHALL INSTALL FENCE SLATS IN FENCING FROM NORTHWEST CORNER TO WEST LIMIT OF CANTILEVER GATE.

ISSUE FOR BID

980 Washington Street, Suite 325N
Dedham, Massachusetts 02026
800.446.5518 | www.woodardcurran.com
COMMITMENT & INTEGRITY DRIVE RESULTS
WOODARD & CURRAN

THIS DOCUMENT IS THE PROPERTY OF WOODARD & CURRAN INC. AND ITS CLIENT. REPRODUCTION OR MODIFICATION WITHOUT WRITTEN PERMISSION IS PROHIBITED.

REV	DESCRIPTION	DATE
A	FOR MASSDEP REVIEW	07/16/14
B	ISSUE FOR BID	3/11/15

DESIGNED BY: BCC
DRAWN BY: JAR
CHECKED BY: BCC
224802-C-302.DWG

STACKPOLE STREET
PUMP STATION SITE PLAN

LOWELL REGIONAL WATER UTILITY
LOWELL, MASSACHUSETTS

WATER SYSTEM IMPROVEMENTS

JOB NO.: 224802.20
DATE: MARCH 2015
SCALE: AS NOTED
SHEET: 5 OF 51

C-302

\\wc\shares\Projects\224802 Lowell MA - Water System Improvement PEF 2011\wip\Drawings\Civil\224802-C-302.dwg, Mar 02, 2015 - 6:49am

24x36 SHEET
1:1

PHASE 1

SCALE: 1"=40'

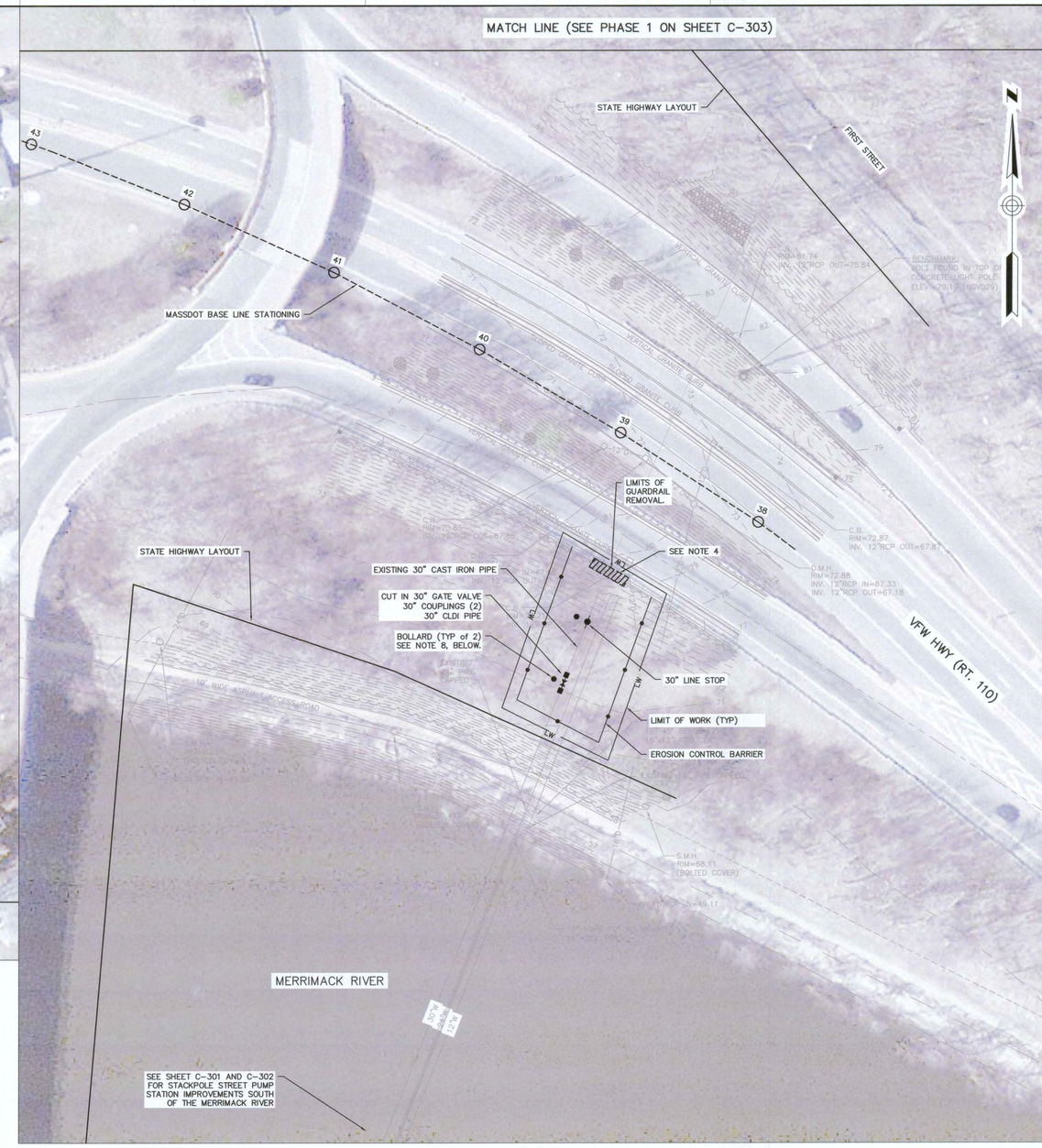

PHASE 2

SCALE: 1"=40'

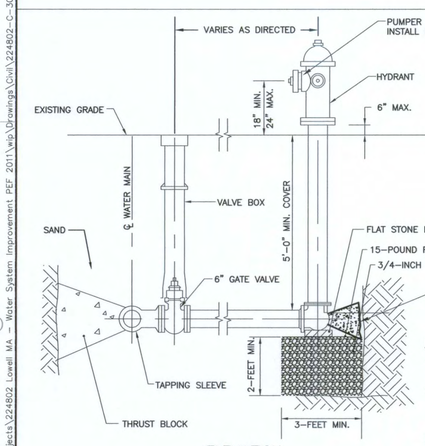

ELEVATION

HYDRANT DETAIL

N.T.S.

NOTES:

1. ALL JOINTS FOR HYDRANT INSTALLATION SHALL BE MEGALUG.
2. HYDRANT LATERALS SHALL NOT INCLUDE JOINTS UNLESS APPROVED BY ENGINEER. WHEN APPROVED JOINTS MUST BE RESTRAINED. COUPLINGS WILL NOT BE ACCEPTED
3. CONTRACTOR SHALL CONSTRUCT A HYDRANT DRAINING SUMP TO EITHER SIDE OF THE HYDRANT. THE HYDRANT DRAINING SUMP SHALL BE 3-FEET WIDE BY 2-FEET IN DEPTH. THE SUMP SHALL CONSIST OF 3/4-INCH CRUSHED STONE WITH 15-POUND ROOFING FELT LAID OVER THE 3/4-INCH CRUSHED STONE.

NOTES:

1. COMPLETE WORK IN PHASE 1 PRIOR TO STARTING WORK IN PHASE 2.
2. APPROVED TRAFFIC PLAN AND ROAD OPENING PERMIT FROM THE CITY ARE REQUIRED BEFORE BEGINNING PHASE 1 WORK.
3. EROSION CONTROL MEASURES SHALL BE INSTALLED PRIOR TO EXCAVATION. INSTALL SILT SACKS IN CATCH BASINS DOWNHILL OF EXCAVATION. SEE DETAIL SHEET C-101.
4. CONTRACTOR SHALL TEMPORARILY REMOVE GUARDRAIL AND POSTS ALONG ROUTE 110 AS NEEDED (UP TO A MAXIMUM OF 24 FT) FOR CONSTRUCTION ACTIVITIES. TRAFFIC MANAGEMENT SHALL BE ENFORCED AS SHOWN IN FIGURE 1 OF THE MASSDOT ACCESS PERMIT APPLICATION DURING PERIODS OF ACTIVE CONSTRUCTION. THE MASSDOT ACCESS PERMIT APPLICATION AND PERMIT ARE INCLUDED IN SPECIFICATION SECTION 01 15 00. CONTRACTOR SHALL COORDINATE POLICE DETAILS DURING THESE ACTIVITIES. POLICE DETAILS SHALL BE PAID FOR BY OWNER BUT SHALL BE SCHEDULED BY CONTRACTOR. SITE REQUIREMENTS DURING NON-CONSTRUCTION PERIODS ARE SHOWN IN FIGURE 2 IN THE MASSDOT ACCESS PERMIT APPLICATION. CONTRACTOR SHALL RESTORE THE SITE TO PRE-CONSTRUCTION CONDITIONS FOLLOWING ALL CONSTRUCTION ACTIVITIES, INCLUDING BUT NOT LIMITED TO REPAIR AND REPLACEMENT OF GUARDRAIL, POSTS, SIDEWALK, AND CURBING (AND ANY OTHER IMPACTED UTILITIES), AS NEEDED. MASSDOT ACCESS PERMIT IS IN SECTION 01 15 00.
5. UPON COMPLETION OF WORK, AREA SHALL BE GRADED TO MATCH PRE-CONSTRUCTION CONDITIONS AND LOAMED AND SEEDED.
6. THE LIMITS OF THE STATE HIGHWAY LAYOUT (SHLO) AND THE BASE LINE STATIONING WERE DERIVED FROM THE STATE HIGHWAY ALTERATION OF 1/20/1953 (LAYOUT 4111).
7. CONTRACTOR SHALL CLEAR AND GRUB AS NEEDED FOR INSTALLATION OF LINESTOP AND GATE VALVE.
8. CONTRACTOR SHALL INSTALL A BOLLARD NEXT TO BOTH THE LINESTOP AND THE GATE VALVE TO MARK THEIR LOCATION. LOCATION OF BOLLARD SHALL COORDINATED WITH ENGINEER. BOLLARD SHALL NOT TO IMPEDE IN NORMAL OPERATION OF EQUIPMENT.

40' 0 40' 80'
BAR SCALE
1" = 40'
CHECK GRAPHIC SCALE BEFORE USING

ISSUE FOR BID

980 Washington Street, Suite 325N
Dedham, Massachusetts 02026
800.446.5518 | www.woodardcurran.com
COMMITMENT & INTEGRITY DRIVE RESULTS
WOODARD & CURRAN

THIS DOCUMENT IS THE PROPERTY OF WOODARD & CURRAN, INC. AND ITS CLIENT. REPRODUCTION OR MODIFICATION WITHOUT WRITTEN PERMISSION IS PROHIBITED.

COMMONWEALTH OF MASSACHUSETTS
ROBERT C. CHUPELL
No. 47701
REGISTERED PROFESSIONAL ENGINEER

REV.	DESCRIPTION	DATE
A	FOR MASSDOT REVIEW	07/29/14
B	ISSUE FOR BID	3/11/15

DESIGNED BY: NHL
CHECKED BY: BCC
DRAWN BY: NHL
224802-C-303.DWG

WATER MAIN UPGRADES
NORTH OF MERRIMACK RIVER

LOWELL REGIONAL WATER UTILITY
LOWELL, MASSACHUSETTS

WATER SYSTEM IMPROVEMENTS

JOB NO.:224802.20
DATE: MARCH 2015
SCALE: AS NOTED
SHEET: 6 OF 51

C-303

\\wc\shared\Projects\224802 Lowell MA - Water System Improvement PEF 2011\wsp\Drawings\Civil\224802-C-303.dwg, Mar 03, 2015 - 11:55am

TRENCH, PAVEMENT & ROCK WIDTH PAY LIMITS

TRENCH DEPTH	NOMINAL PIPE DIAMETER (D)	TRENCH WIDTH	TEMPORARY AND BINDER PAVEMENT	PERMANENT TOP PAVEMENT	ROCK EXCAVATION
<12'	LESS THAN 24"	4' – 0"	4' – 0"	6' – 0"	4' – 0"
<12'	24 TO 30"	5' – 0"	5' – 0"	7' – 0"	5' – 0"
<12'	GREATER THAN 30"	6' – 0"	6' – 0"	8' – 0"	6' – 0"
12' TO 16'	LESS THAN 24"	5' – 0"	5' – 0"	7' – 0"	5' – 0"
12' TO 16'	24 TO 30"	6' – 0"	6' – 0"	8' – 0"	6' – 0"
12' TO 16'	GREATER THAN 30"	7' – 0"	7' – 0"	9' – 0"	7' – 0"
>16'	LESS THAN 24"	6' – 0"	6' – 0"	8' – 0"	6' – 0"
>16'	24 TO 30"	7' – 0"	7' – 0"	9' – 0"	7' – 0"
>16'	GREATER THAN 30"	8' – 0"	8' – 0"	10' – 0"	8' – 0"

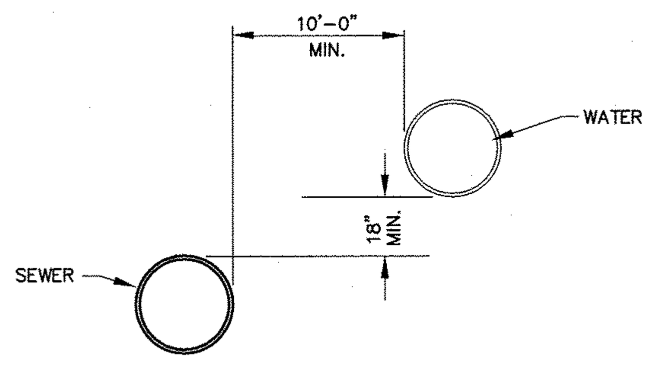

NORMAL CONDITIONS

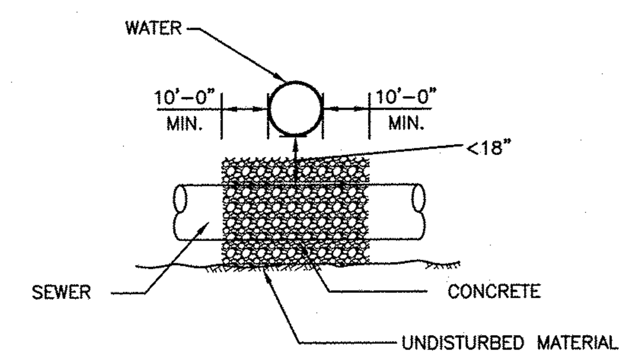

UNUSUAL CONDITIONS

NOTES:

THE SEPARATION OF WATER MAINS AND SEWERS SHALL COMPLY WITH THE FOLLOWING GENERAL REQUIREMENTS.

A. PARALLEL INSTALLATION:

1. NORMAL CONDITIONS: THE INSIDE EDGE OF A WATER MAIN SHALL BE LAID AT LEAST 10 FEET HORIZONTALLY FROM THE INSIDE EDGE OF ANY SANITARY SEWER, STORM SEWER OR SEWER MANHOLE.
2. UNUSUAL CONDITIONS: WHEN LOCAL CONDITIONS PREVENT A HORIZONTAL SEPARATION OF 10 FEET, THE INSIDE EDGE OF A WATER MAIN MAY BE LAID A MINIMUM OF 5 FEET FROM THE INSIDE EDGE OF A SEWER PROVIDED THAT THE BOTTOM OF THE WATER MAIN IS AT LEAST 18 INCHES HIGHER THAN THE TOP OF THE SEWER (SEE DETAIL) AND THE WATER MAIN IS IN A SEPARATE TRENCH OR ON AN UNDISTURBED EARTH SHELF.

B. CROSSINGS:

1. NORMAL CONDITIONS: WHEREVER POSSIBLE, SEWERS CROSSING WATER MAINS SHALL BE LAID A MINIMUM VERTICAL DISTANCE OF 18" FROM OUTSIDE OF WATER MAIN TO OUTSIDE OF SEWER. WHERE WATER MAIN CROSSES UNDER SEWER, ADEQUATE STRUCTURAL SUPPORT SHALL BE PROVIDED FOR THE SEWER TO MAINTAIN LINE AND GRADE.
2. UNUSUAL CONDITIONS: WHEN IT IS IMPOSSIBLE TO OBTAIN 10' HORIZONTAL AND 18" VERTICAL SEPARATION, THE SEWER SHALL BE ENCASED IN CONCRETE 10' ON BOTH SIDES OF THE CROSSING MEASURED PERPENDICULAR TO THE WATER MAIN.

MINIMUM WATER AND SEWER PIPE SEPARATION DETAIL

N.T.S.

NOMINAL PIPE SIZE (INCHES)	MAXIMUM PIPE OD (INCHES)	REQUIRED BEARING AREA (SQ FT)					
		90 DEG	60 DEG	45 DEG	30 DEG	22.30 DEG	11.25 DEG
3	3.96	2.0	1.4	1.1	0.7	0.5	0.3
4	4.80	2.9	2.0	1.6	1.1	0.8	0.4
6	6.90	6	4	3	2.2	1.6	0.8
8	9.05	10	7	6	4	3	1.4
10	11.10	15	11	8	6	4	2.1
12	13.20	22	15	12	8	6	3
14	15.30	29	21	16	11	8	4
16	17.40	38	27	20	14	10	5
18	19.50	48	34	26	17	13	7
20	21.60	58	41	32	21	16	8
24	25.80	83	59	45	30	23	12
30	32.00	128	90	69	47	35	18
36	38.30	183	130	99	67	51	25

NOTES:

1. MAXIMUM TEST PRESSURE = 1.5x150 PSI
2. MINIMUM ALLOWABLE SOIL BEARING PRESSURE = 2000 PSF
3. BEARING AREA = AxB
4. C SHALL BE GREATER THAN A/2 AND B/2
5. WRAP FITTINGS WITH POLYETHYLENE PRIOR TO CONSTRUCTING THRUST BLOCKS. NO JOINTS SHALL BE COVERED WITH CONCRETE.

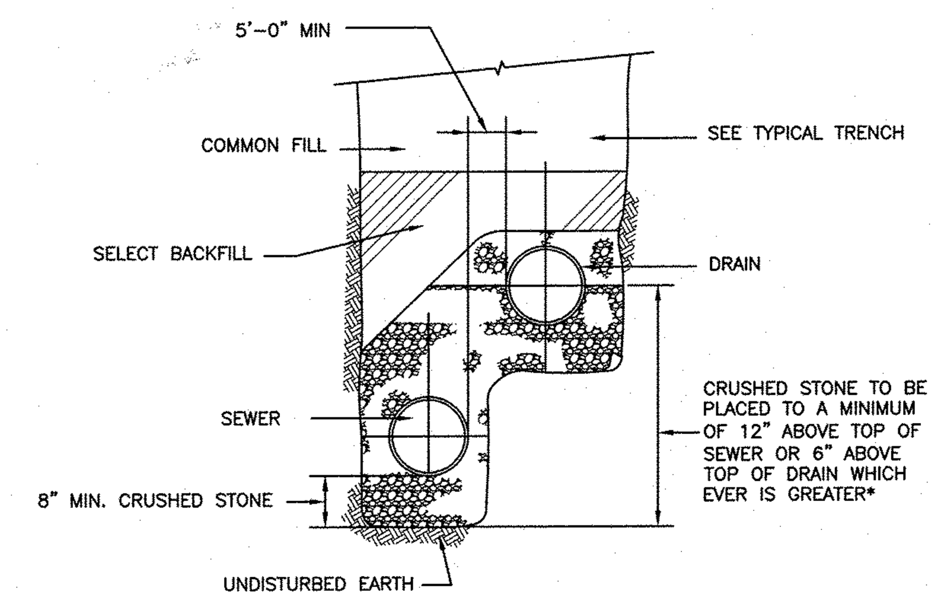

CRUSHED STONE CONFORMING TO ASTM C33 GRADATION 67 SHALL BE USED AS BEDDING FOR EACH PIPE FROM A MINIMUM OF 8 INCHES BELOW THE PIPE TO MID–DIAMETER OF THE PIPE. A SAND CUSHION, COMPACTED IN 12–INCH LAYERS SHALL BE USED FROM MID–DIAMETER TO 12 INCHES MINIMUM OVER EACH PIPE. COMPACT SELECT COMMON FILL MAY BE USED FROM THE TOP OF THE SAND CUSHION OF THE LOWER PIPE TO BOTTOM OF THE CRUSHED STONE BEDDING FOR THE UPPER PIPE.

TYPICAL TRENCH DETAIL FOR PARALLEL PIPES

N.T.S.

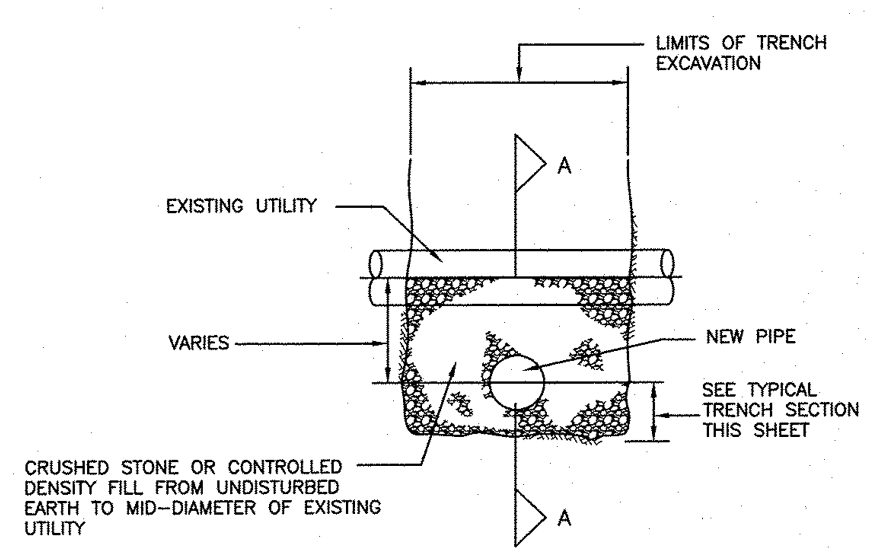

TYPICAL SECTION

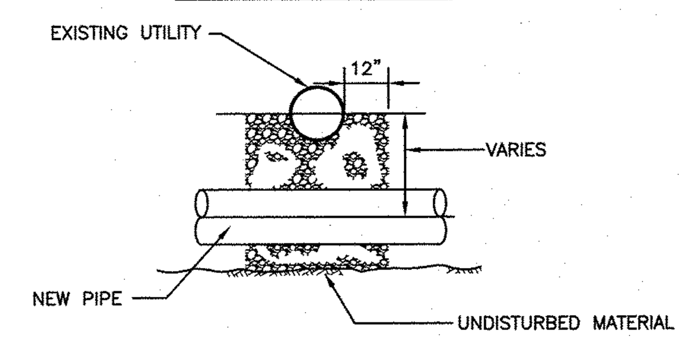

SECT A–A

UTILITY CROSSING

N.T.S.

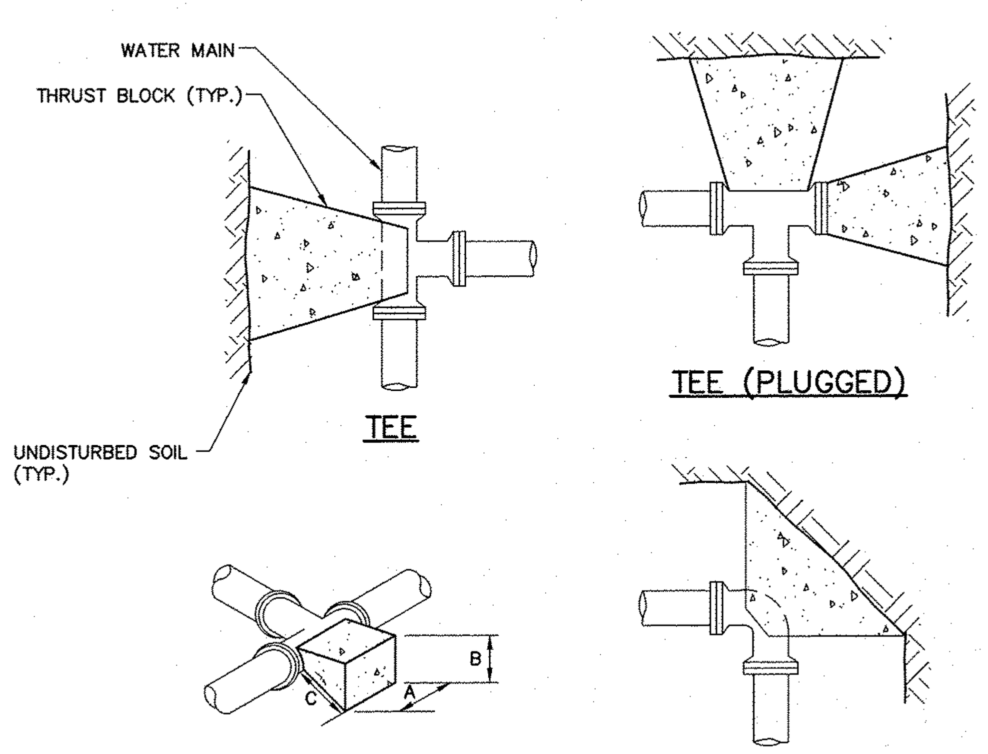

TEE

TEE (PLUGGED)

TEE

BEND

THRUST BLOCKS FOR HORIZONTAL BENDS AND LOWER VERTICAL BENDS

N.T.S.

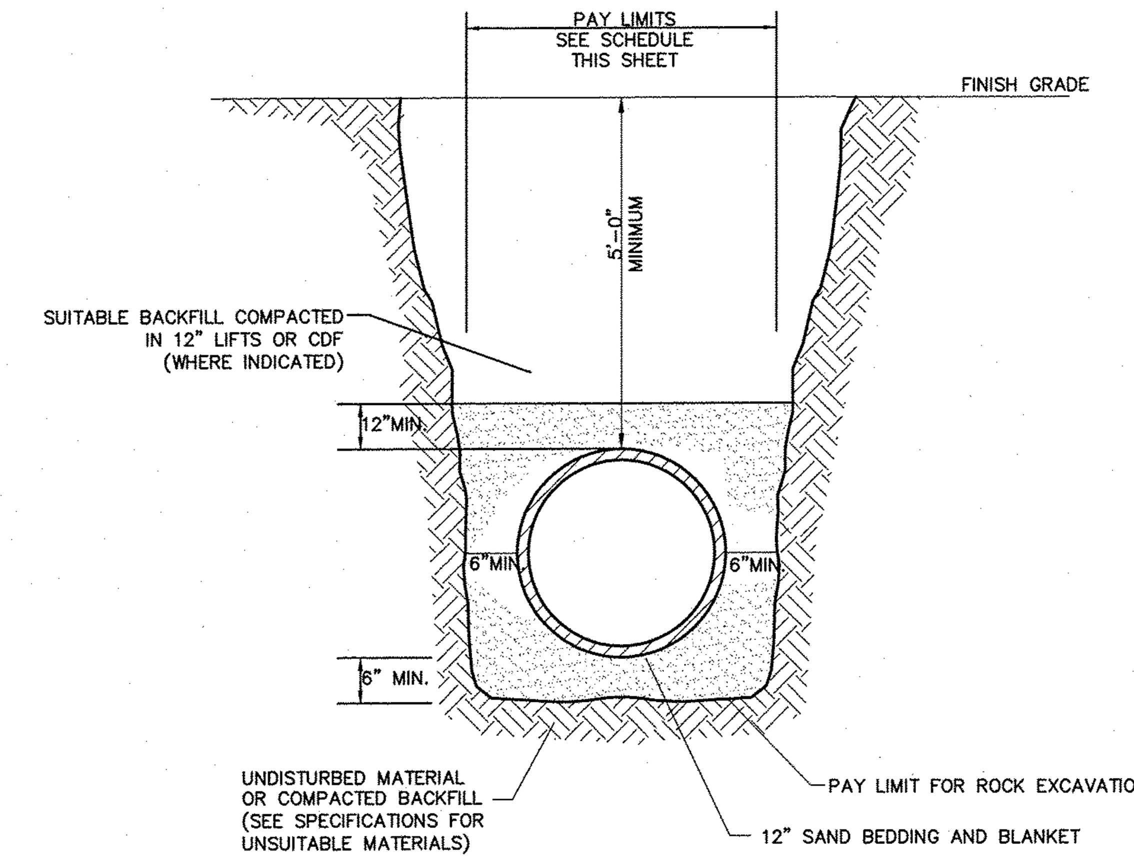

TYPICAL TRENCH DETAIL

N.T.S.

NOTES:

1. PARALLEL INSTALLATION – WATER MAINS SHALL BE LAID AT LEAST 10 FEET HORIZONTALLY FROM ANY EXISTING OR PROPOSED GRAVITY SANITARY OR STORM SEWER, SEPTIC TANK, OR SUBSOIL TREATMENT SYSTEM. THE DISTANCE SHALL BE MEASURED EDGE TO EDGE. IN CASES WHERE IT IS NOT PRACTICAL TO MAINTAIN A 10–FOOT SEPARATION, IT IS PERMISSIBLE TO INSTALL A WATER MAIN CLOSER TO A SEWER. HOWEVER, THE WATER MAIN MUST BE LAID IN A SEPARATE TRENCH OR ON AN UNDISTURBED EARTH SHELF LOCATED ON ONE SIDE OF THE SEWER AT SUCH AN ELEVATION THAT THE BOTTOM OF THE WATER MAIN IS AT LEAST 18 INCHES ABOVE THE TOP OF THE SEWER.
2. CROSSINGS – WATER MAINS CROSSING SEWERS SHALL BE LAID TO PROVIDE A MINIMUM VERTICAL DISTANCE OF 18 INCHES BETWEEN THE OUTSIDE OF THE WATER MAIN AND THE OUTSIDE OF THE SEWER. IT IS PREFERRED THAT THE WATER MAIN CROSS ABOVE THE SEWER. AT CROSSING, ONE FULL LENGTH OF WATER PIPE SHALL BE LOCATED SO BOTH JOINTS WILL BE AS FAR FROM THE SEWER AS POSSIBLE, AND THE SEWER MATERIALS SHALL BE WATER WORKS GRADE 150 PSI PRESSURE RATED PIPE MEETING LATEST AWWA STANDARDS AND SHALL BE PRESSURE TESTED TO ENSURE WATER TIGHTNESS. SPECIAL STRUCTURAL SUPPORT FOR THE WATER AND SEWER PIPES MAY BE REQUIRED, AS WELL AS SPECIAL MATERIALS FOR CONSTRUCTION AND CONNECTING DEVICES.

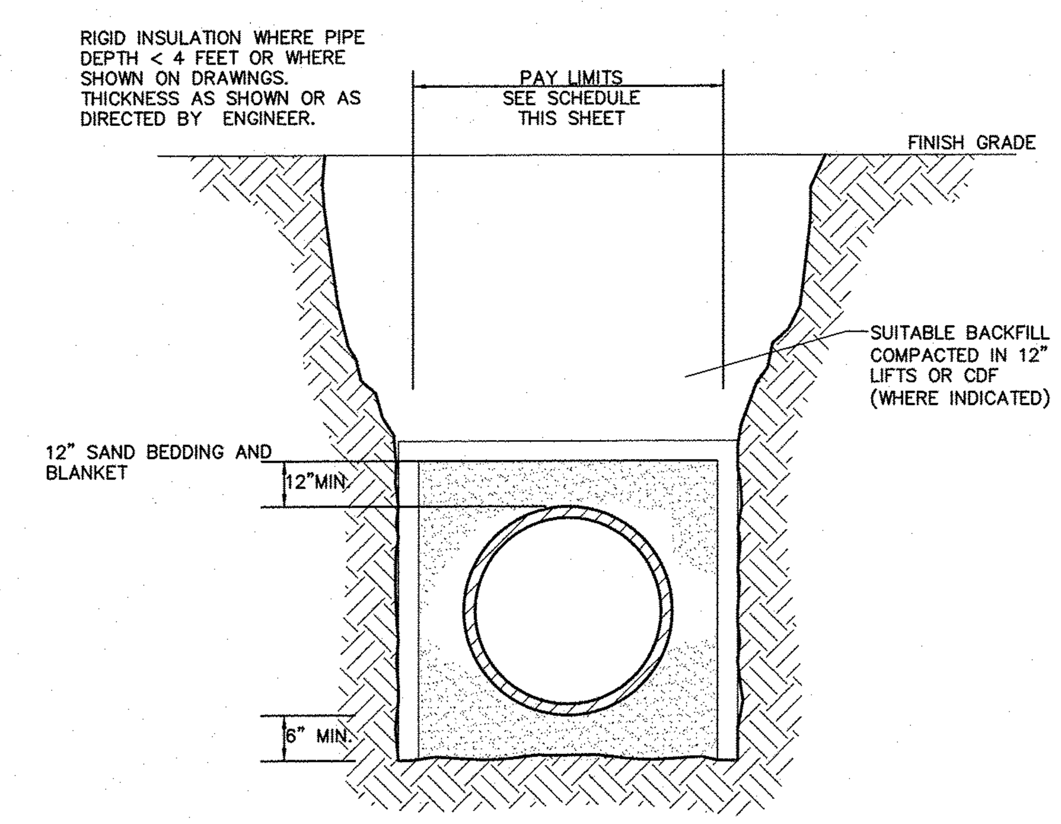

TYPICAL TRENCH DETAIL FOR PIPE INSULATION

N.T.S.

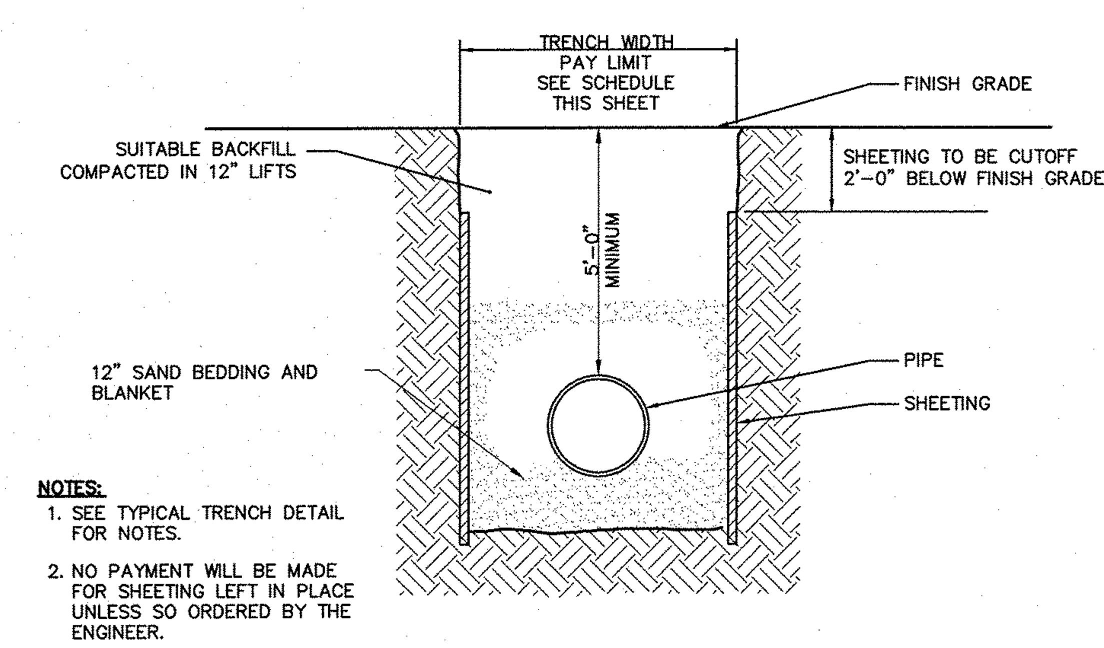

NOTES:

1. SEE TYPICAL TRENCH DETAIL FOR NOTES.
2. NO PAYMENT WILL BE MADE FOR SHEETING LEFT IN PLACE UNLESS SO ORDERED BY THE ENGINEER.

SHEETED TRENCH DETAIL

N.T.S.

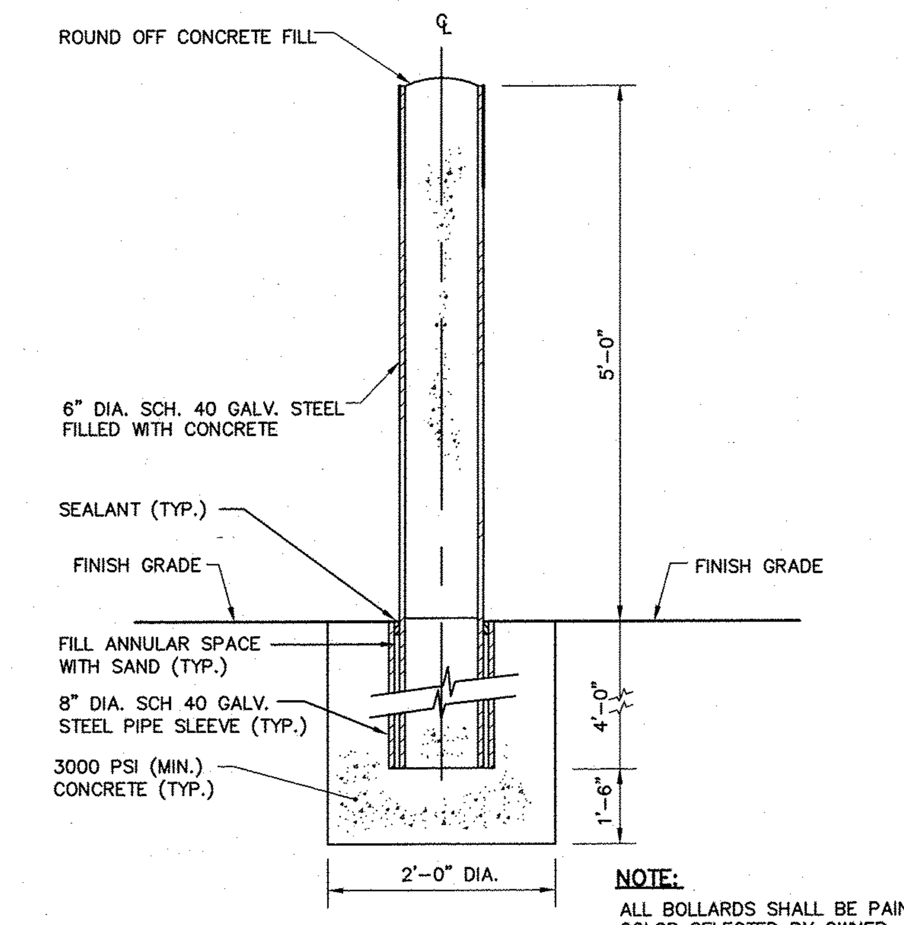

NOTE:
ALL BOLLARDS SHALL BE PAINTE[D] COLOR SELECTED BY OWNER.

BOLLARD DETAIL

N.T.S.

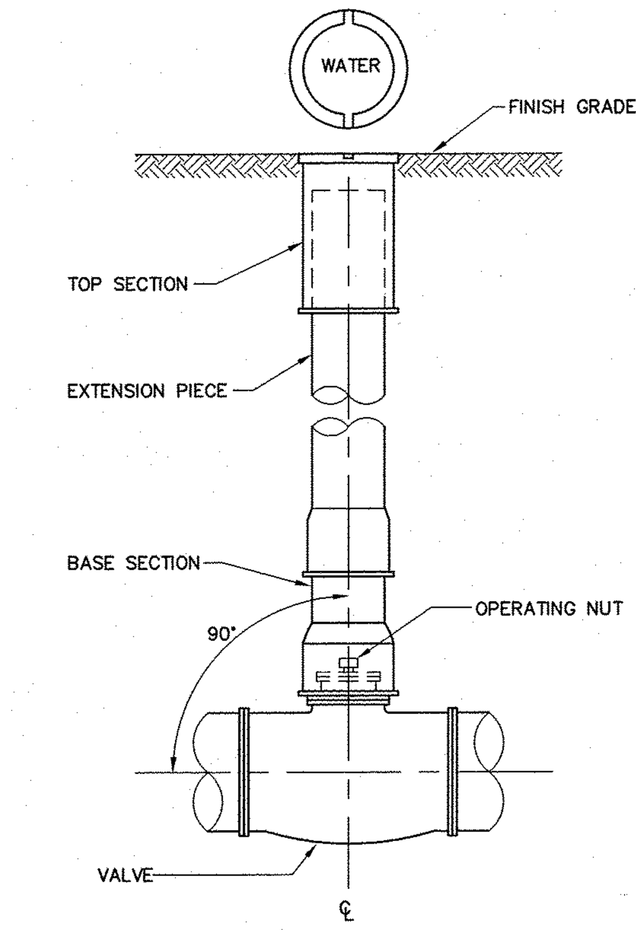

VALVE WITH VALVE BOX, 18" AND SMALLER

N.T.S.

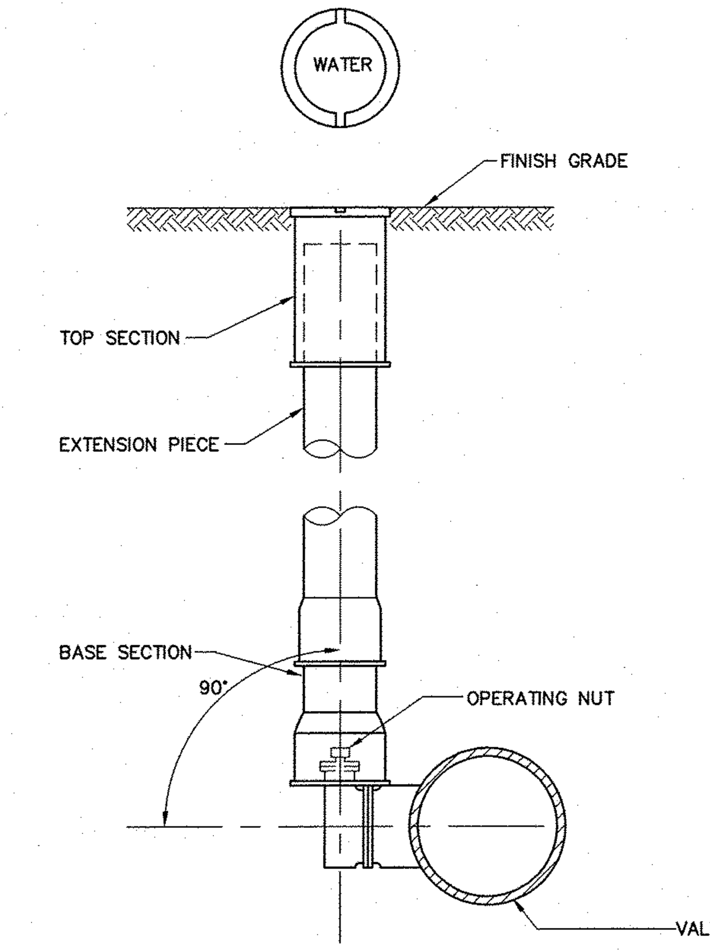

VALVE WITH VALVE BOX, LARGER THAN 18"

N.T.S.

ISSUE FOR BID

24x36 SHEET 1:1

WOODARD & CURRAN
980 Washington Street, Suite 325N
Dedham, Massachusetts 02026
800.446.5518 | www.woodardcurran.com
COMMITMENT & INTEGRITY DRIVE RESULTS

THIS DOCUMENT IS THE PROPERTY OF WOODARD & CURRAN INC. AND ITS CLIENT. REPRODUCTION OR MODIFICATION WITHOUT WRITTEN PERMISSION IS PROHIBITED.

REV	DESCRIPTION	DATE
B	ISSUE FOR BID	3/11/15
A	FOR MASSDEP REVIEW	07/18/14

DESIGNED BY: NHL | CHECKED BY: BCC
DRAWN BY: NHL | 224802-C-501, 502, 503.DWG

CIVIL DETAILS 1

LOWELL REGIONAL WATER UTILITY
LOWELL, MASSACHUSETTS

WATER SYSTEM IMPROVEMENTS

JOB NO.:224802.20
DATE:MARCH 2015
SCALE: AS NOTED
SHEET: 7 OF 51

C-501

\\wc\shared\Projects\224802 Lowell MA – Water System Improvement PEF 2011\wip\Drawings\Civil\224802-C-501, 502, 503.dwg, Mar 02, 2015 – 6:50am

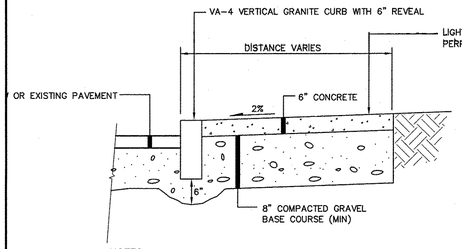

NOTES:

REPLACE WHOLE PANELS FOR CONCRETE SIDEWALK REPAIR.

SIDEWALK NOTES:

1. CUTS IN EXISTING SIDEWALKS SHALL BE FROM NEAREST JOINT OR POUR LINE FOR FULL WIDTH OF SIDEWALK.
2. CONCRETE SHALL CONFORM TO SECTION M4.02 OF MASS STANDARD SPECS FOR HIGHWAYS (AIR-ENTRAINED, 4000 PSI, 3/4" AGGREGATE.
3. JOINTS SHALL BE SCORED AT INTERVALS NOT TO EXCEED 5 FEET WITH EXPANSION JOINTS EVERY 30 LINEAR FEET. A 2-1/2" EDGE FINISH SHALL BE REQUIRED ON EACH SIDE OF JOINT.
4. A MINIMUM OF 3 FEET CLEAR SHALL BE MAINTAINED AT ANY PERMANENT OBSTACLE IN ACCESSIBLE ROUTE (I.E., HYDRANTS, UTILITY POLES, TREE WELLS, SIGNS, ETC.)
5. FINISHED CONCRETE SURFACE SHALL BE ADEQUATELY PROTECTED FOR CURING AND DEFACEMENT.

TYPICAL REPLACEMENT SIDEWALK DETAIL

N.T.S.

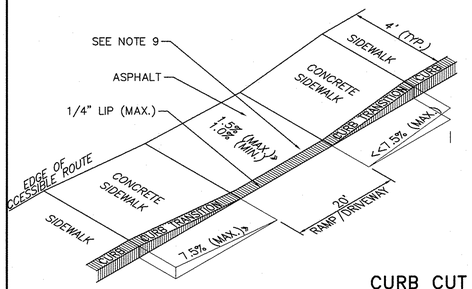

CURB CUT NOTES:

1. THE MAXIMUM ALLOWABLE SIDEWALK AND CURB RAMP CROSS SLOPES SHALL BE 1.5% (1% MIN.).
2. THE MAXIMUM ALLOWABLE SLOPE OF ACCESSIBLE ROUTE EXCLUDING CURB RAMPS SHALL BE 5%.
3. THE MAXIMUM ALLOWABLE SLOPE OF ACCESSIBLE ROUTE CURB RAMPS SHALL BE 7.5%.
4. A MINIMUM OF 3 FEET CLEAR SHALL BE MAINTAINED AT ANY PERMANENT OBSTACLE IN ACCESSIBLE ROUTE (I.E., HYDRANTS, UTILITY POLES, TREE WELLS, SIGNS, ETC.)
5. CURB TREATMENT VARIES, SEE PLANS FOR CURB TYPE.
6. BASE OF RAMP SHALL BE GRADED TO PREVENT PONDING.
7. SEE TYPICAL SIDEWALK SECTION FOR RAMP CONSTRUCTION.
8. WHERE ACCESSIBLE ROUTES ARE LESS THAN 5' IN WIDTH (EXCLUDING CURBING) A 5' x 5' PASSING AREA SHALL BE PROVIDED AT INTERVALS NOT TO EXCEED 200 FEET.
9. ELIMINATE ALL CURBING AT RAMP (OTHER THAN VERTICAL CURBING, WHICH SHALL BE SET FLUSH) WHERE IT ABUTS ROADWAY.

CURB CUT DETAIL

N.T.S.

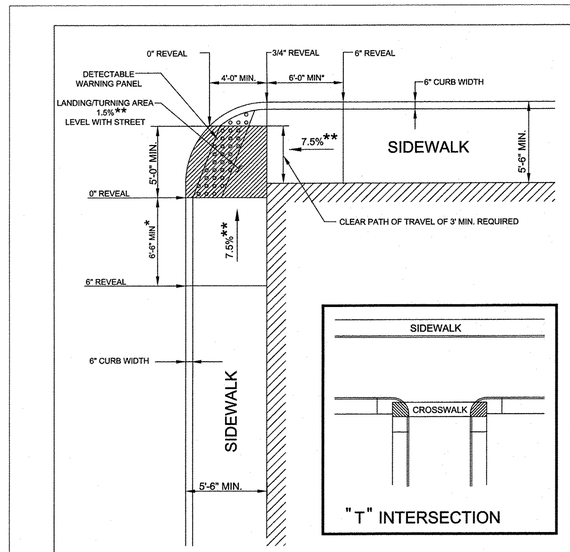

LEGEND

BUILDING OR OTHER UNALTERABLE CONDITION

★ TRANSITION LENGTH SHOWN IS MINIMUM. (SEE E 107.9.0R)

★★ TOLERANCE FOR CONSTRUCTION ±0.5%

NOTE:

ROADWAY, GUTTER, AND FIRST 6" OF SIDEWALK TO BE ADJUSTED FOR FIELD CONDITIONS

massDOT Massachusetts Department of Transportation Highway Division — CONSTRUCTION STANDARDS

"T" INTERSECTION WHEELCHAIR RAMP

DATE OF ISSUE MARCH 2012

DRAWING NUMBER E 107.6.4R

WHEELCHAIR RAMP DETAIL

N.T.S.

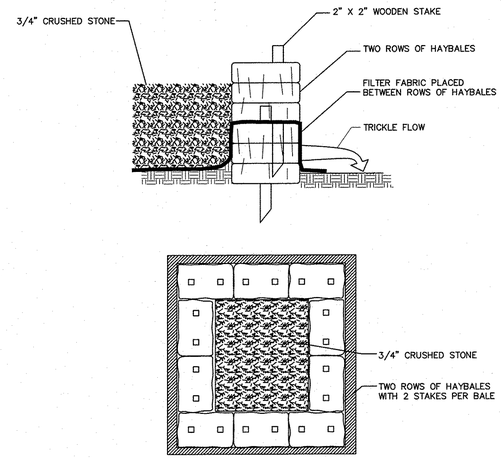

DETENTION BASIN NOTES:

1. ALL BARRIERS SHALL BE INSPECTED IMMEDIATELY AFTER EACH RAINFALL AND AT LEAST DAILY DURING PROLONGED RAINFALL. ANY REQUIRED REPAIRS SHALL BE MADE IMMEDIATELY, AT NO ADDITIONAL COST TO THE OWNER.

2. SHOULD THE BARRIER DECOMPOSE OR BECOME INEFFECTIVE BEFORE THE END OF THE EXPECTED LIFE AND THE BARRIER IS STILL NECESSARY, IT SHALL BE REPLACED PROMPTLY.

3. SEDIMENT DEPOSITS SHALL BE REMOVED AFTER EACH STORM EVENT. THEY MUST BE REMOVED WHEN THE DEPOSITS REACH APPROXIMATELY ONE-HALF THE HEIGHT OF THE BARRIER.

4. ANY SEDIMENT DEPOSITS REMAINING IN PLACE AFTER THE BARRIER IS NO LONGER REQUIRED SHALL BE REMOVED AND DISPOSED.

DETENTION BASIN DETAIL

N.T.S.

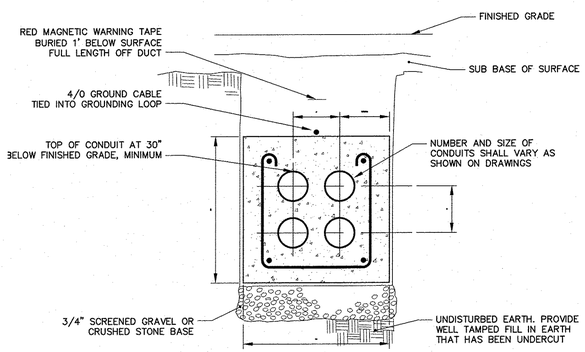

REINFORCED CONCRETE ENCASED UNDERGROUND DUCTBANK DETAIL

SCALE: N.T.S.

DUCTBANK NOTE:

ALL EXCAVATION, BACKFILL, SURFACE RESTORATION, AND CONCRETE AND REBAR WORK SHALL BE PROVIDED BY THE GENERAL CONTRACTOR. MANHOLES, HANDHOLES, CONDUIT, AND CONDUIT SPACERS/SUPPORTS SHALL BE PROVIDED BY THE ELECTRICAL SUBCONTRACTOR. MANHOLES AND HANDHOLES SHALL BE INSTALLED BY THE GENERAL CONTRACTOR. CONTRACTORS SHALL COORDINATE WORK.

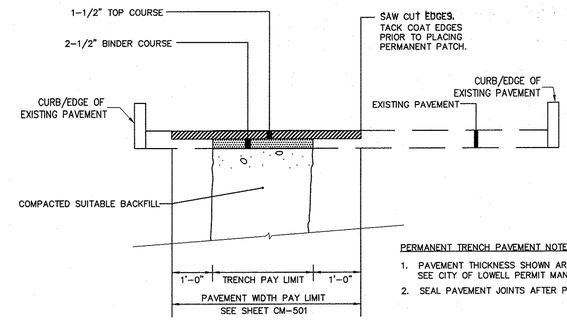

PERMANENT TRENCH PAVEMENT NOTES:

1. PAVEMENT THICKNESS SHOWN ARE FOR ROADWAY UP TO 12% GRADE. SEE CITY OF LOWELL PERMIT MANUAL FOR FURTHER DETAILS.
2. SEAL PAVEMENT JOINTS AFTER PAVING.

PERMANENT TRENCH PAVEMENT SECTION

N.T.S.

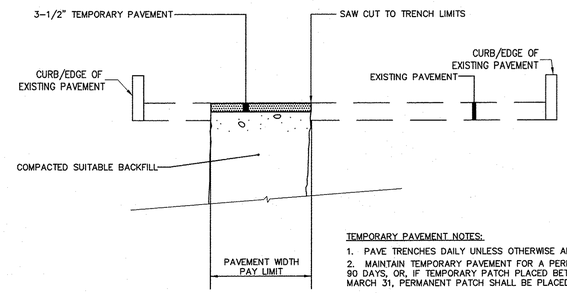

TEMPORARY PAVEMENT NOTES:

1. PAVE TRENCHES DAILY UNLESS OTHERWISE APPROVED BY OWNER.
2. MAINTAIN TEMPORARY PAVEMENT FOR A PERIOD OF NOT MORE THAN 90 DAYS, OR, IF TEMPORARY PATCH PLACED BETWEEN DEC 30 AND MARCH 31, PERMANENT PATCH SHALL BE PLACED BY MAY 15.

TEMPORARY TRENCH PAVEMENT SECTION

N.T.S.

GENERAL PAVEMENT NOTES:

1. PAVEMENT THICKNESS DEPTHS NOTED ARE MEASURED AFTER COMPACTION.
2. BITUMINOUS CONCRETE SHALL MEET SECTION M3.11, CLASS I, TYPE I-1 OF MASS STANDARD SPECS FOR HIGHWAYS AND BRIDGES.

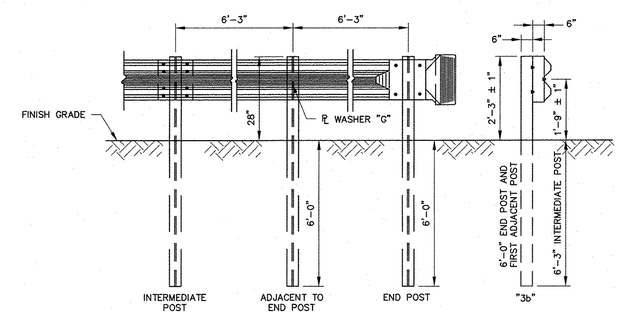

NOTES:

1. ALL POST SPACING SHALL BE 6'-3" UNLESS OTHERWISE DIRECTED BY ENGINEER.
2. GUARDRAIL SHALL BE MDOT SPECIFICATION TYPE "3b" POSTS AND SHALL CONFORM TO MDOT SPECIFICATION SECTION 710.07(b).
3. ALL HOLES IN BEAM SHALL BE SHOP-PUNCHED BEFORE GALVANIZING.

TYPICAL GUARDRAIL DETAIL

N.T.S.

ISSUE FOR BID

24x36 SHEET 1:1

980 Washington Street, Suite 325N
Dedham, Massachusetts 02026
800.446.5518 | www.woodardcurran.com
WOODARD & CURRAN
COMMITMENT & INTEGRITY DRIVE RESULTS

THIS DOCUMENT IS THE PROPERTY OF WOODARD & CURRAN INC. AND ITS CLIENT. REPRODUCTION OR MODIFICATION WITHOUT WRITTEN PERMISSION IS PROHIBITED.

REV	DESCRIPTION	DATE
A	FOR MASSDEP REVIEW	07/18/14
B	ISSUE FOR BID	3/11/15

DESIGNED BY: NHL | CHECKED BY: BCC
DRAWN BY: NHL | 224802-C-501, 502, 503.DWG

CIVIL DETAILS 2

LOWELL REGIONAL WATER UTILITY
LOWELL, MASSACHUSETTS

WATER SYSTEM IMPROVEMENTS

JOB NO.: 224802.20
DATE: MARCH 2015
SCALE: AS NOTED
SHEET: 8 OF 51

C-502

\\wc\shared\Projects\224802 Lowell MA - Water System Improvement PEF 2011\wip\Drawings\Civil\224802-C-501, 502, 503.dwg, Mar 02, 2015 - 6:50am

TYPICAL CHAIN LINK FENCE DETAIL

N.T.S.

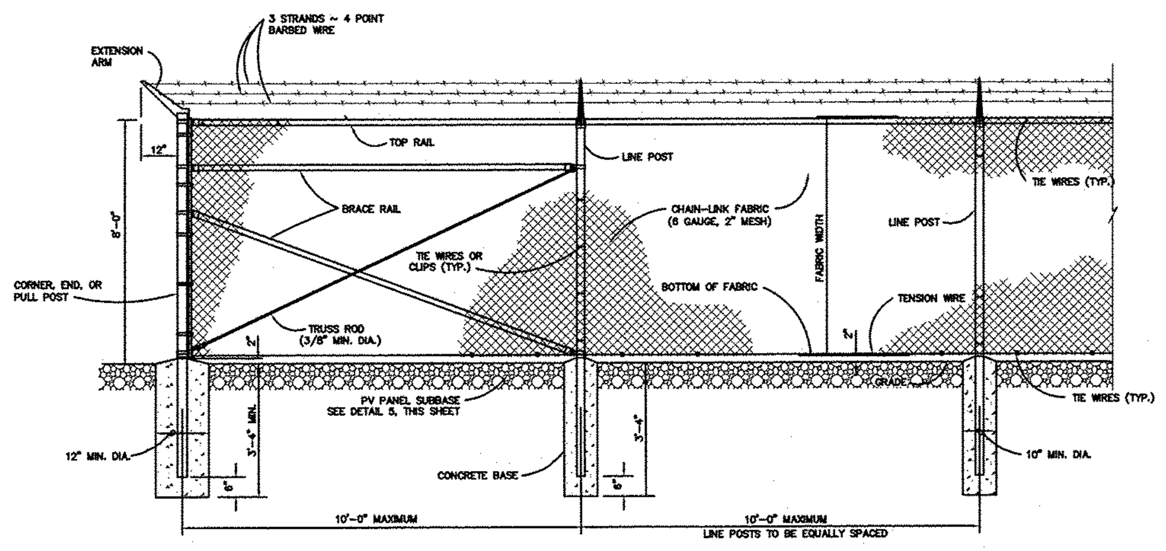

CHAIN LINK SECURITY FENCE DETAIL

STEEL POST SCHEDULE	
USE AND SECTION	MINIMUM OUTSIDE DIMENSIONS (NOMINAL)
CORNER, END & PULL POSTS	
TUBULAR – ROUND	2.875" O.D.
LINE POSTS	
TUBULAR – ROUND	2.375" O.D.
TOP & BRACE RAILS	
TUBULAR – ROUND	1.66" O.D.

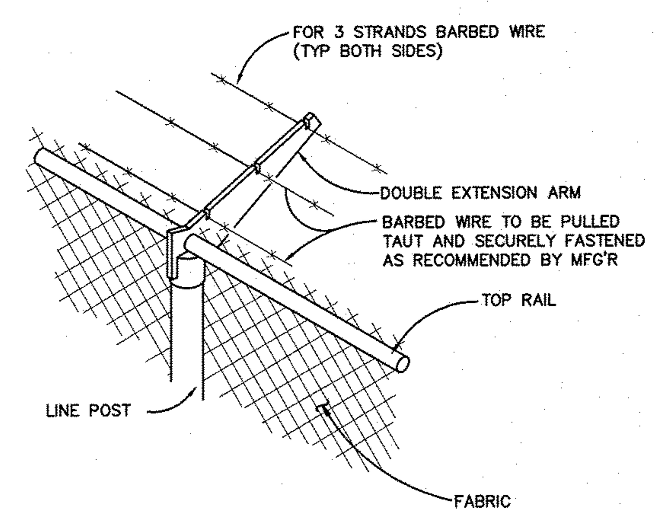

EXTENSION ARM FOR BARBED WIRE

COATINGS:
GATE FRAME –ALUMINUM ALLOY 6063-T6
POSTS –STEEL, GALVANIZED IN ACCORDANCE WITH ASTM, F1083 OR A123
FABRIC –TO MATCH LINE FENCE
BARBWIRE –TO MATCH LINE FENCE

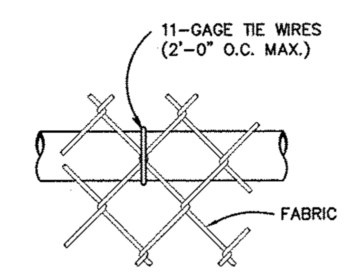

TOP OR BRACE RAIL ATTACHMENT

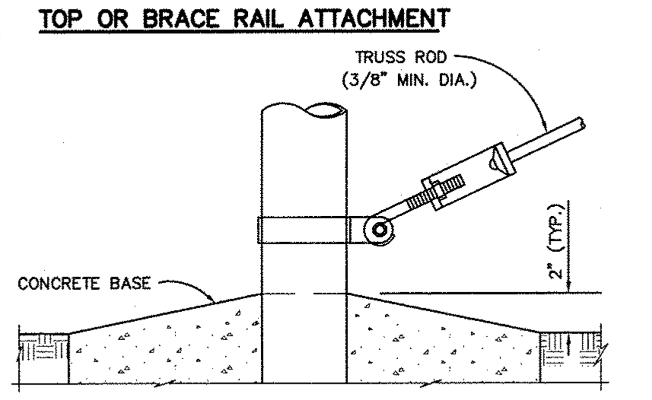

TRUSS ROD AND BAND

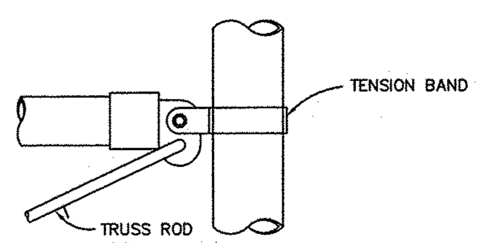

ROUND POST

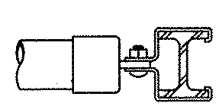

H-BEAM

BRACE RAIL CLAMP DETAILS

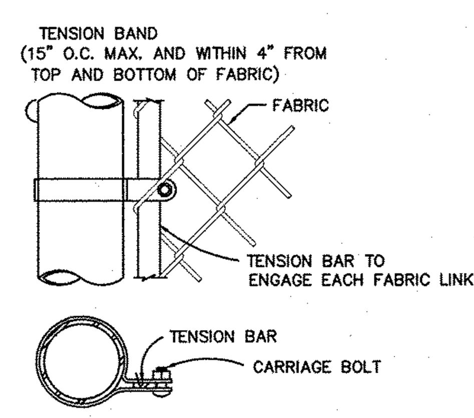

END OR GATE POST DETAIL

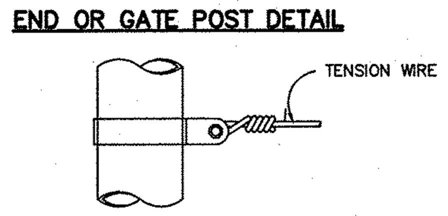

TENSION BAND DETAIL

FASTENING DETAILS

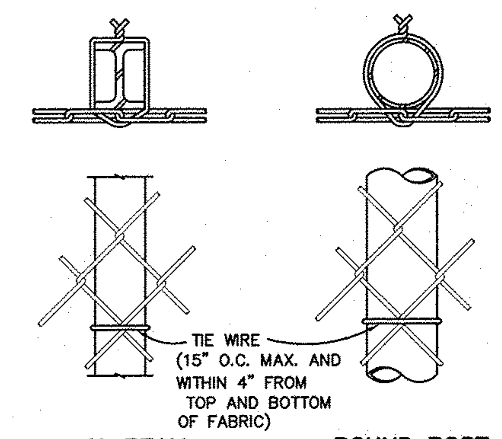

H-BEAM ROUND POST

LINE POST ATTACHMENTS

NOTES:

1. DETAILS SHOWN ARE TO CLARIFY REQUIREMENTS AND ARE NOT INTENDED TO LIMIT OTHER TYPES OF FENCE SECTIONS AND METHODS OF INSTALLATION.
2. WIRE TIES, RAILS, POSTS, AND BRACES SHALL BE CONSTRUCTED ON THE SECURE SIDE OF THE FENCE ALIGNMENT. CHAIN-LINK FABRIC SHALL BE PLACED ON THE OPPOSITE SIDE OF THE SECURE AREA.
3. C-SECTION POSTS SHALL BE INSTALLED SO THAT THE VOID INSIDE THE POST IS COMPLETELY FILLED WITH CONCRETE UP TO THE TOP OF THE FOUNDATION.

GATE DETAILS

NOT TO SCALE

COATINGS:
GATE FRAME –ALUMINUM ALLOY 6063-T6
POSTS –STEEL, GALVANIZED IN ACCORDANCE WITH ASTM, F1083 OR A123
FABRIC –TO MATCH LINE FENCE
BARBWIRE –TO MATCH LINE FENCE

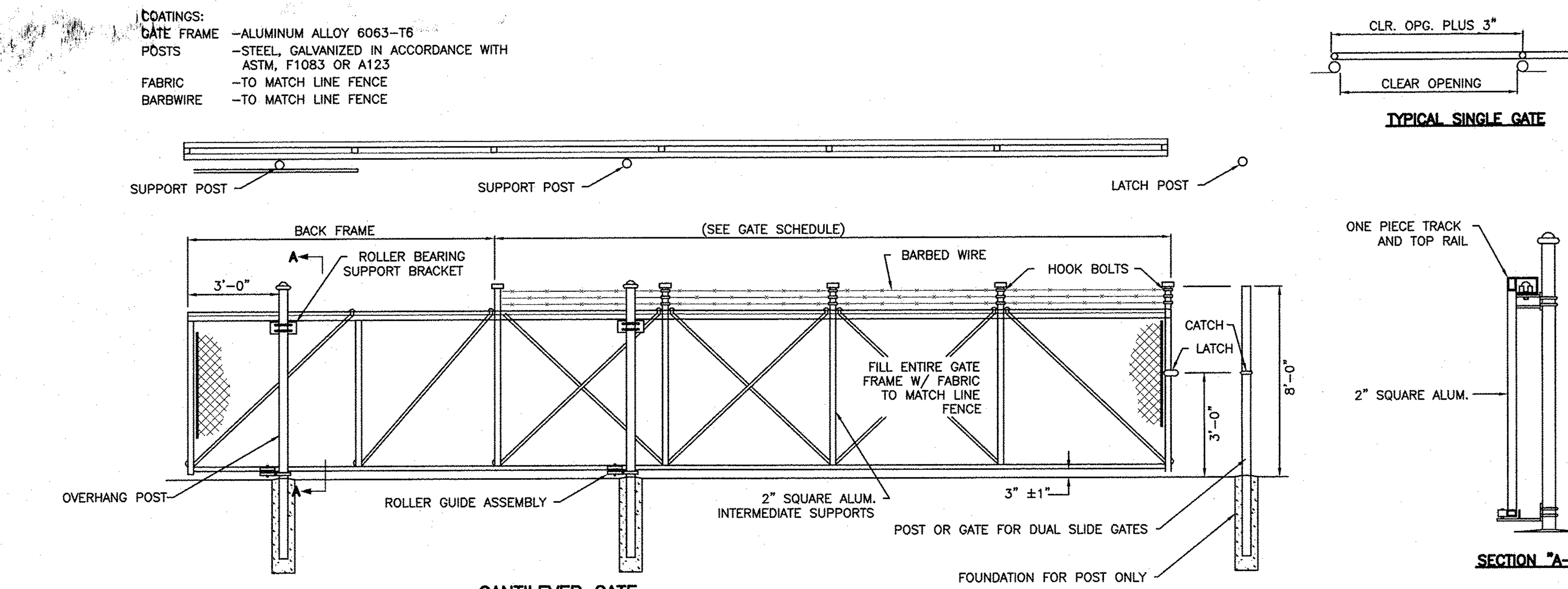

TRANSFORMER CONTAINMENT PAD CONSTRUCTION NOTES:

1. EXCAVATE TO SUBGRADE ELEVATION.
2. RE-COMPACT NATIVE SUBGRADE.
3. CONSTRUCT CONCRETE PERIMETER CURB.
4. INSTALL GEOTEXTILE LINER FROM TOP OF WALLS AND AROUND BOTTOM OF CONTAINMENT AREA. AREAS WHERE CONDUIT PENETRATES LINER, OVERLAP LINER AROUND CONDUIT AND SEAL WITH EXPANDING FOAM.
5. INSTALL 6" OF SILTY SAND ON TOP OF LINER.
6. INSTALL SECOND LAYER OF GEOTEXTILE LINER AS NOTED IN STEP 4.
7. BUILD UP SUBGRADE FOR TRANSFORMER PAD WITH 6" OF COMPACTED STRUCTURAL FILL AND LEVEL.
8. INSTALL GROUND GRID.
9. CONSTRUCT CONCRETE TRANSFORMER PAD.
10. FILL IN CONDUIT OPENINGS WITH SILTY SAND OR EXPANDING FOAM UP TO THE LAST TWO INCHES OF THE PAD.
11. FILL REST OF CONDUIT OPENING WITH CONCRETE GROUT OR EXPANDING FOAM.
12. FILL AREA BETWEEN SLAB AND CURB WITH 1 1/2 INCHES UNIFORMLY GRADED CRUSHED STONE.
13. GEOTEXTILE SHALL BE 16-OUNCE POLYPROPYLENE GEOTEXTILE (FILTER FABRIC) WEIGHING 16 OUNCES/SQUARE YARD. GEOTEXTILE SHALL BE EQUAL TO THE FOLLOWING:
    - AME 1680 BY AMERICAN ENGINEERING FABRICS, INC.
    - SYNTHETIC INDUSTRIES ST 160 BY SPARTAN MILLS INC.
    - CARTHAGE MILLS FX-160HS BY US CONSTRUCTION FABRICS LLC.
14. ALL EARTHWORK AND CONCRETE WORK SHALL BE PERFORMED BY GENERAL CONTRACTOR. ELECTRICAL CONTRACTOR SHALL PERFORM ALL TRANSFORMER, CONDUIT, GROUNDING, AND OTHER ELECTRICAL RELATED WORK.

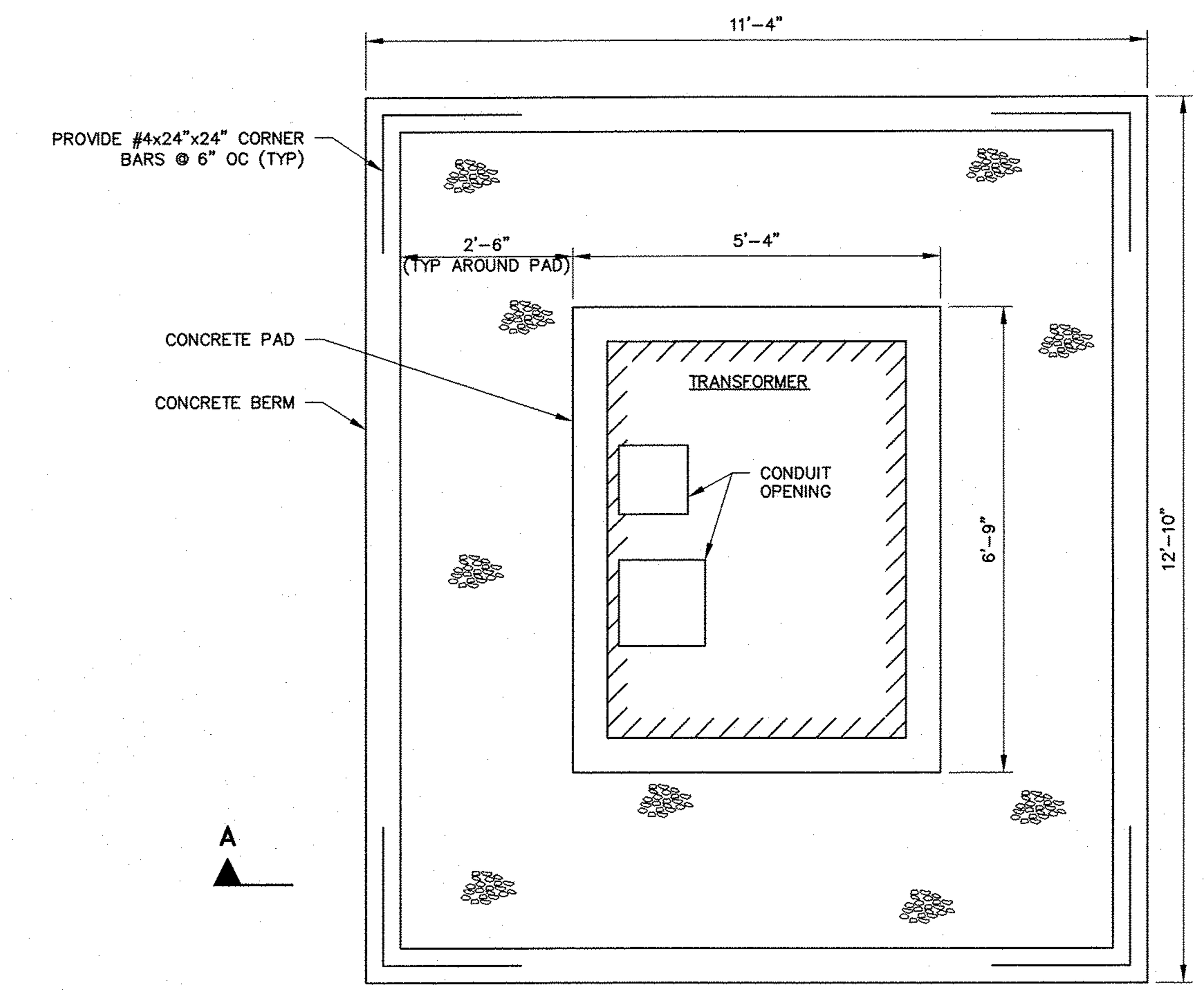

PLAN VIEW

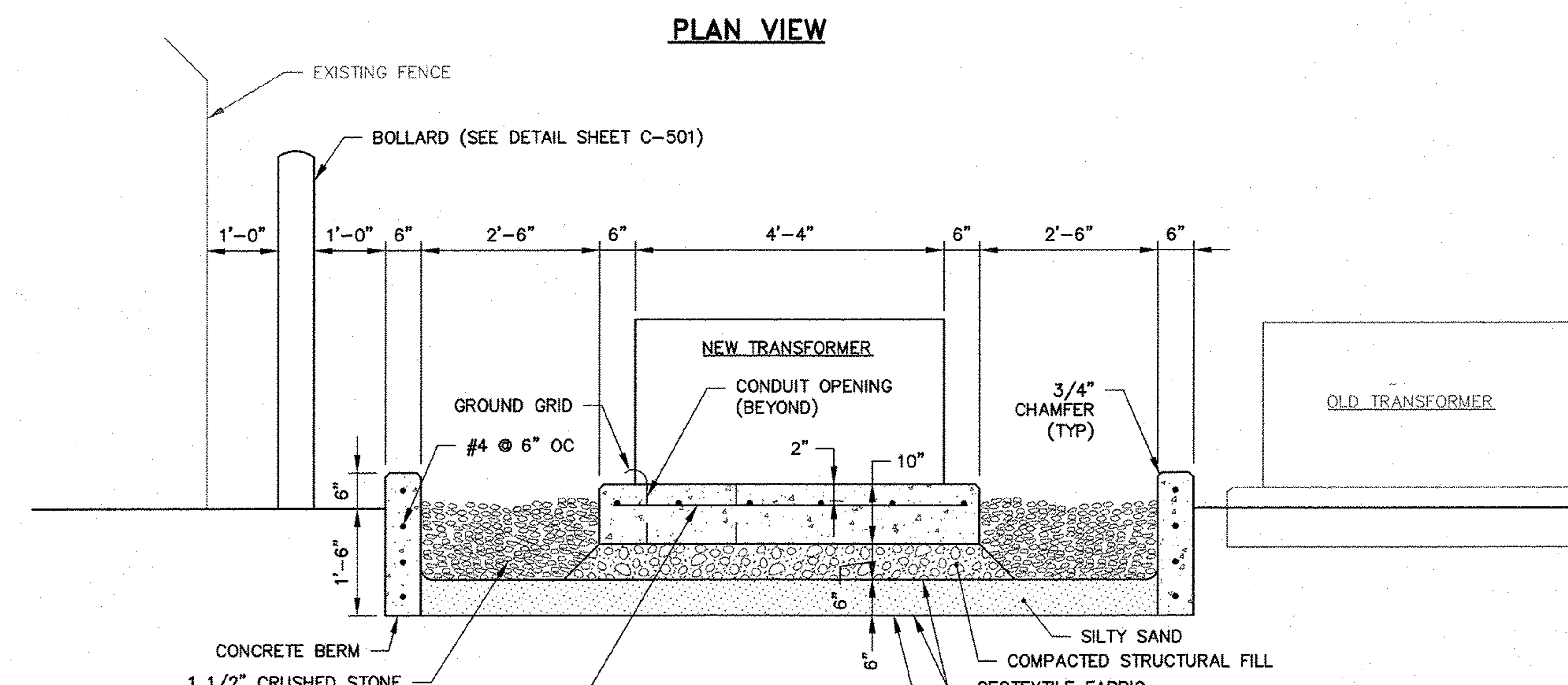

SECTION A–A

STACKPOLE ST PUMP STATION – TRANSFORMER INSTALLATION DETAIL

SCALE: 1/2" = 1'-0"

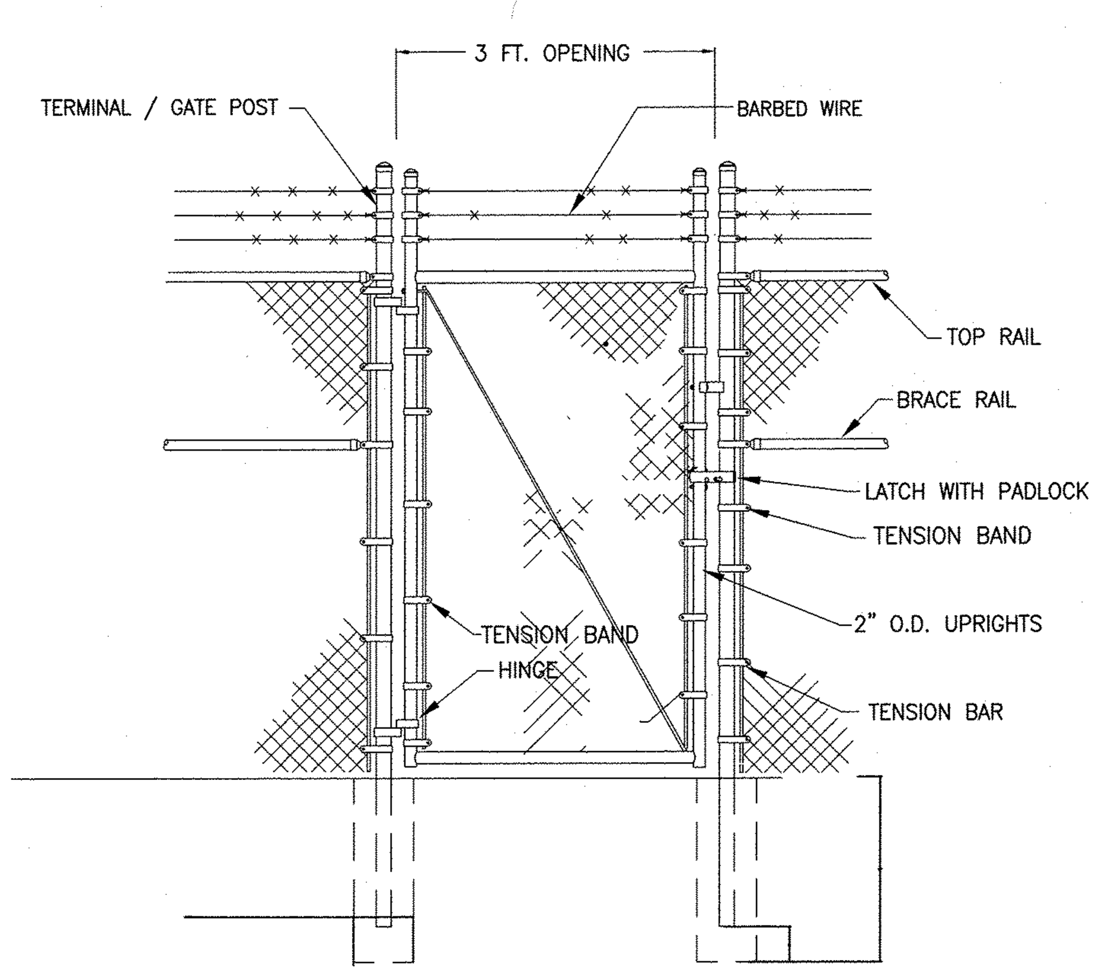

TYPICAL SINGLE PEDESTRIAN GATE DETAIL

N.T.S.

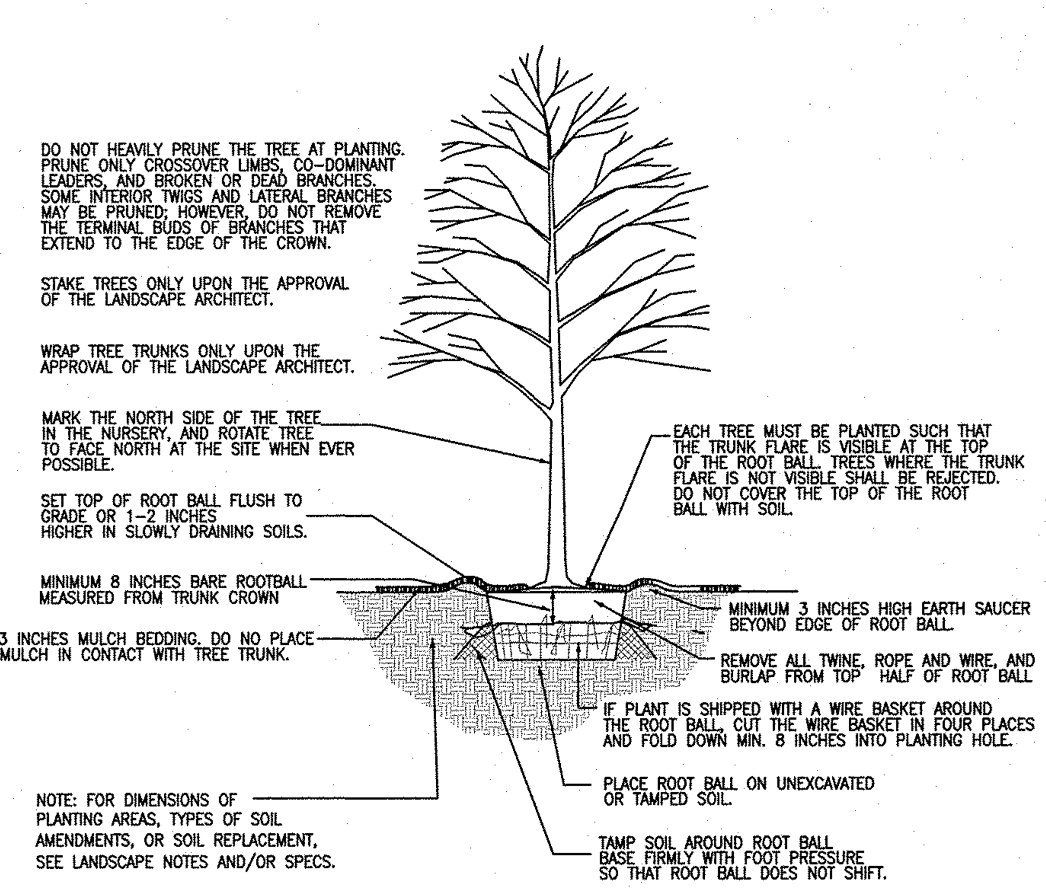

SHRUB PLANTING DETAIL – B&B TREES IN ALL SOIL TYPES

PLANTING NOTE:

1. ALL PLANT MATERIAL INSTALLED SHALL MEET THE SPECIFICATIONS OF THE AMERICAN STANDARD FOR NURSERY STOCK (LATEST EDITION) AS SET FORTH BY THE AMERICAN ASSOCIATION OF NURSERYMEN.

PLANT LIST				
KEY	COMMON & BOTANICAL NAME	SIZE	ROOT	QTY.
A	ARBROVITAE THUJA OCCENDENTALIS	72" HGT.	B&B	6

ISSUE FOR BID

WOODARD & CURRAN
980 Washington Street, Suite 325N
Dedham, Massachusetts 02026
800.446.5518 | www.woodardcurran.com
COMMITMENT & INTEGRITY DRIVE RESULTS

THIS DOCUMENT IS THE PROPERTY OF WOODARD & CURRAN INC. AND ITS CLIENT. REPRODUCTION OR MODIFICATION WITHOUT WRITTEN PERMISSION IS PROHIBITED.

COMMONWEALTH OF MASSACHUSETTS ROBERT C. CHAPELL SANITARY No. 35918 REGISTERED PROFESSIONAL ENGINEER 3/11/15

REV	DESCRIPTION	DATE
B	ISSUE FOR BID	3/11/15
A	FOR MASSDEP REVIEW	07/18/14

DESIGNED BY: NHL CHECKED BY: BCC
DRAWN BY: NHL 224802-C-501, 502, 503.DWG

CIVIL DETAILS 3

LOWELL REGIONAL WATER UTILITY
LOWELL, MASSACHUSETTS

WATER SYSTEM IMPROVEMENTS

JOB NO.:224802.20
DATE: MARCH 2015
SCALE: AS NOTED
SHEET: 9 OF 51

C-503

\\wc\shared\Projects\224802 Lowell MA – Water System Improvement PEF 2011\wip\Drawings\Civil\224802-C-501, 502, 503.dwg, Mar 02, 2015 – 6:50pm

ABBREVIATIONS

&	AND
L	ANGLE
@	AT
[	CHANNEL
ø	DIAMETER
#	NUMBER
AC	ACOUSTICAL CEILING
ACI	AMERICAN CONCRETE INSTITUTE
ADA	AMERICANS WITH DISABILITIES ACT
ADD	ADDITIONAL
AFF	ABOVE FINISHED FLOOR
AISC	AMERICAN INSTITUTE OF STEEL CONSTRUCTION
ALT	ALTERNATE/ALTERNATING
APPROX	APPROXIMATELY
ARCH	ARCHITECTURAL
ASCE	AMERICAN SOCIETY OF CIVIL ENGINEERING
ASME	AMERICAN SOCIETY OF MECHANICAL ENGINEERS
ASTM	AMERICAN SOCIETY FOR TESTING AND MATERIALS
BLDG	BUILDING
BM	BEAM
BOC	BOTTOM OF CONCRETE
BOF	BOTTOM OF FOOTING
BOP	BOTTOM OF PIPE
BOT	BOTTOM
C/C	CENTER TO CENTER
CL/℄	CENTER LINE
CF	COLUMN FOOTING
CIRC	CIRCULAR/CIRCUMFERENCE
CJ	CONSTRUCTION JOINT
CLR	CLEAR
CO	CLEAN OUT
COL	COLUMN
CONC	CONCRETE
CONT	CONTINUOUS-CONTINUE
COR	CORNER
C/S	CURE AND SEAL COMPOUND
D	DEEP
DBS/DI	DOWEL BAR SPLICERS/DOWEL INSERT
DBC	DISTANCE BETWEEN CENTERS
DEG/°	DEGREE
DET	DETAIL
DI	DUCTILE IRON
DIA	DIAMETER
DIAG	DIAGONAL
DIR	DIRECTION
DN	DOWN
DWG(S)	DRAWING(S)
E-W	EAST-WEST
EA	EACH
EF	EACH FACE
EIFS	EXTERIOR INSULATION AND FINISH SYSTEM
EL/ELEV	ELEVATION
ELEC	ELECTRICAL
EMBED	EMBEDDED
EQ	EQUAL(LY)
EQUIP	EQUIPMENT
EW	EACH WAY
EXG	EXISTING
EXP	EXPANSION OR EXPOSED
EXT	EXTERIOR
FD	FLOOR DRAIN
FE	FIRE EXTINGUISHER
FF	FINISHED FLOOR
FIN	FINISH(ED)
FL	FLOOR/FLANGED
FND	FOUNDATION
FRP	FIBERGLASS REINFORCED POLYESTER
FSR	FLEXIBLE SHEET ROOFING
FT	FOOT, FEET
FTG	FOOTING
GA	GAUGE
GALV	GALVANIZED
GC	GENERAL CONTRACTOR
GB	GYPSUM BOARD
H	HEIGHT
HDW	HARDWARE
HM	HOLLOW METAL
HOR	HORIZONTAL
HP	HIGH POINT
HR	HOUR
ID	INTERIOR DIAMETER
IJ	ISOLATION JOINT
IN	INCH(ES)
INT	INTERIOR
INV	INVERT
JT	JOINT
L	LONG
LB(S)	POUND(S)
LG	LONG
LLV	LONG LEG VERTICAL
LP	LOW POINT
MATL	MATERIAL
MAX	MAXIMUM
MECH	MECHANICAL
MFR	MANUFACTURER
MID	MIDDLE
MIN	MINIMUM
MISC	MISCELLANEOUS
MO	MASONRY OPENING
MPH	MILES PER HOUR
MR	MOISTURE RESISTANT
MWP	METAL WALL PANELS
N-S	NORTH-SOUTH
NO	NUMBER
NTS	NOT TO SCALE
OC	ON CENTER
OCEF	ON CENTER EACH FACE
OCEW	ON CENTER EACH WAY
OD	OUTSIDE DIAMETER
OE	OPEN END
OH	OVERHEAD
OPNG	OPENING
OSHA	OCCUPATIONAL SAFETY AND HEALTH ADMINISTRATION
P	COLUMN PEDESTAL
PAF	POWDER ACTUATED FASTENER
PE	PLAIN END
PED	PEDESTAL
PEN	PENETRATION
PL/℄	PLATE
PROJ	PROJECTION
PSF	POUNDS PER SQUARE FEET
PSI	POUNDS PER SQUARE INCH
PTD	PAINTED
PVC	POLYVINYL CHLORIDE PLASTIC
R	RISERS
RAD	RADIUS
REF	REFERENCE
REINF	REINFORCE, REINFORCING
REQ'D	REQUIRED
RFD	RECESSED FLOOR DRAIN
RO	ROUGH OPENING
SCH	SCHEDULE
SCJ	SLAB CONSTRUCTION JOINT
SHT	SHEET
SJ	SAWED JOINT
SLR	SEALER
SP	SUPPORT PLATE
SPA	SPACED
SPEC	SPECIFICATION, SPECIFIED
SQ	SQUARE
SS	STAINLESS STEEL
STD	STANDARD
STL	STEEL
STRUCT	STRUCTURE, STRUCTURAL
STUCCO	EXTERIOR INSULATION AND FINISH SYSTEM (EIFS)
T	TREADS
T&B	TOP AND BOTTOM
THD	THREAD
TOC	TOP OF CONCRETE
TOF	TOP OF FOOTING
TOS	TOP OF STEEL
TOW	TOP OF WALL
TYP	TYPICAL
UNO	UNLESS NOTED OTHERWISE
VERT	VERTICAL
W	WIDTH, WIDE
W/	WITH
WCJ	WALL CONSTRUCTION JOINT
WP	WORK POINT
WS	WATERSTOP
WTH	WIDTH

NOTE: THIS IS A GENERAL LIST OF SYMBOLS AND ABBREVIATIONS. NOT ALL ITEMS SHOWN HERE APPEAR ON THE CONTRACT DOCUMENTS

MATERIALS

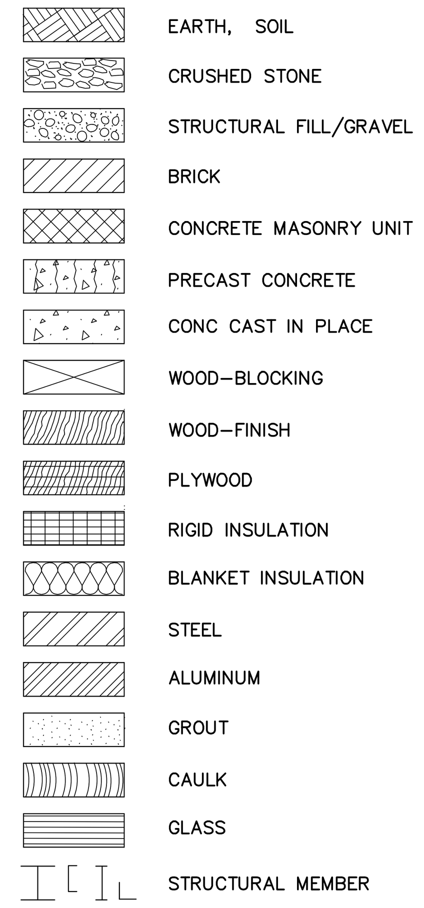

SYMBOLS

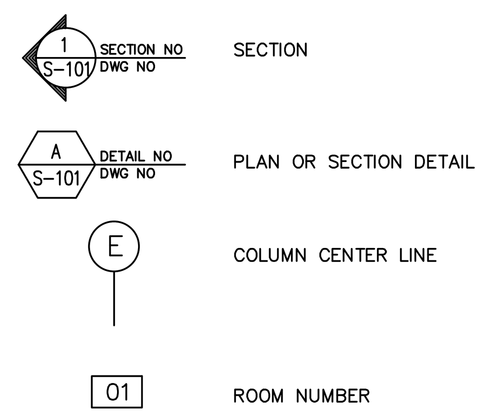

OPENINGS

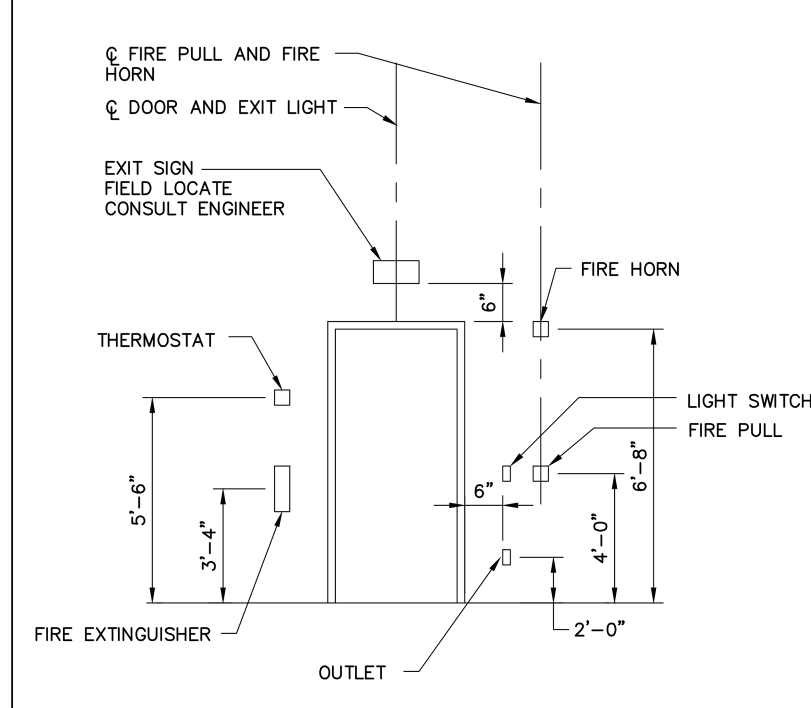

TYPICAL MOUNTING HEIGHTS

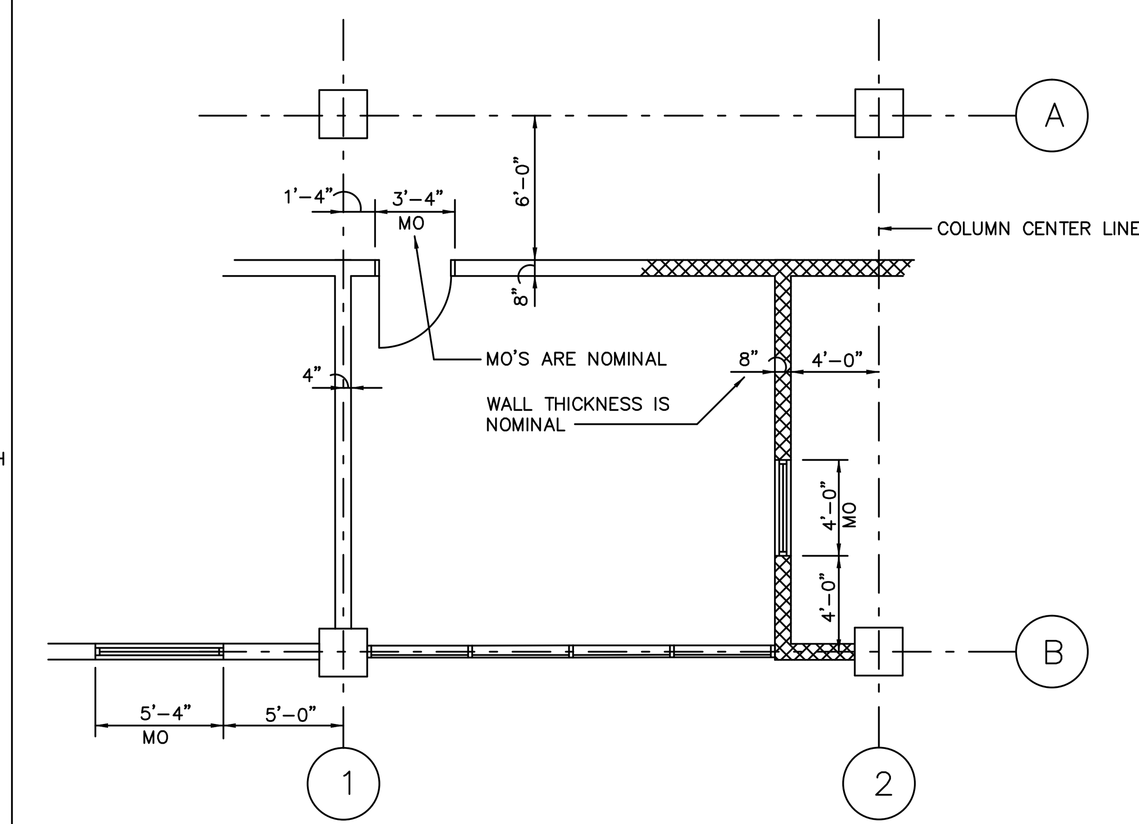

MODULAR DIMENSIONING SYSTEM

(USED ON SMALL SCALE PLANS ONLY)

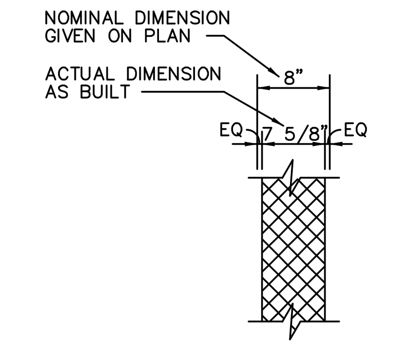

AS-BUILT DIMENSIONS

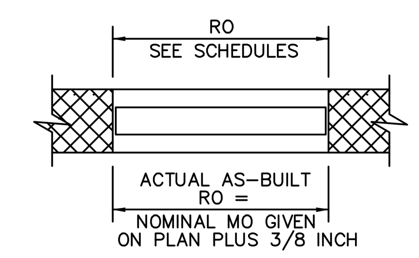

WINDOW OR LOUVER OPENING IN PLAN

GENERAL NOTES:

A. SITE CONDITIONS AND EXCAVATION:

1. EXCAVATION WORK MAY ENCOUNTER MATERIALS THAT MAY UNDERGO SUBSTANTIAL STRENGTH LOSS WHEN SUBJECTED TO CONSTRUCTION TRAFFIC AND EXCAVATION ACTIVITIES, ESPECIALLY IN THE PRESENCE OF PERIODS OF PRECIPITATION AND HIGH GROUNDWATER LEVELS.
2. CARE MUST BE EXERCISED DURING CONSTRUCTION TO MINIMIZE DISTURBANCE OF THE BEARING SOILS.
3. SHOULD THE SUBGRADE BECOME YIELDING OR DIFFICULT TO WORK, DISTURBED AREAS SHOULD BE OVER-EXCAVATED AND BACKFILLED WITH STRUCTURAL FILL AS SPECIFIED.
4. KEEP EXCAVATION DRY AND STABLE BY SUMPING AND PUMPING OF SEEPAGE WATER.

B. REINFORCED CONCRETE:

1. COMPRESSIVE STRENGTH OF CONCRETE AT 28 DAYS - 4000 PSI; AIR CONTENT 6%± 1.5%; W/C RATIO 0.45 MAXIMUM; SLUMP VARIES (SEE SPECIFICATION). SUBMIT TEST RESULTS TO THE ENGINEER.
2. CONCRETE DESIGN AS PER ACI 318 BUILDING CODE. ALL CONCRETE SHALL BE DESIGNED, PLACED, AND CURED (MIN. 7 DAYS) AS PER ALL APPLICABLE SECTIONS OF THE ACI CODE.
3. REINFORCEMENT: ASTM A615 GRADE 60 - ALL SPLICES CLASS B (U.N.O.). REINFORCEMENT SHALL BE DETAILED, FABRICATED, AND PLACED AS PER ACI 315 DETAILING MANUAL.
4. PROVIDE 3/4" CHAMFER ON EXPOSED EDGES OF CONCRETE, U.N.O.
5. CONCRETE TESTING OF SLUMP, AIR CONTENT AND TEMPERATURE SHALL BE PERFORMED AS SPECIFIED.
6. SLAB FINISH: STEEL TROWEL FINISH IN ACCORDANCE WITH ACI 302.1R TO A TOLERANCE OF 1/4" IN 10 FEET FLATNESS. FOR EXTERIOR SLABS, TEXTURE WITH STIFF BRISTLE BROOM DRAGGED IN THE DIRECTION OF SLAB SLOPE.
7. FLOOR FINISH:
   INT. FLOOR/COVER SLABS - STEEL TROWEL FINISH
   EXT. SLABS - BROOM FINISH WITH SLOPE
8. CURING/SEALING COMPOUND FOR ALL INTERIOR AND EXTERIOR CONCRETE (UNLESS NOTED OTHERWISE): PROVIDE CLEAR VINYL TOLUENE ACRYLIC SILANE POLYMER BLEND EQUAL TO "CERTI-VEX GUARD CLEAR" BY VEXCON CHEMICALS, A ONE-STEP CURE AND PENETRATING WATER REPELLENT SEALER MEETING ASTM C-1315, TYPE 1, CLASS A, NCHRP-244. APPLY FIRST COAT SHORTLY AFTER CONCRETE FINISHING AS DIRECTED. APPLY A SECOND COAT NEAR FINAL COMPLETION AFTER CLEANING SLAB SURFACE OF ALL CONSTRUCTION-RELATED CONTAMINANTS. APPLICATION SHALL BE IN STRICT ACCORDANCE WITH MANUFACTURER'S WRITTEN INSTRUCTIONS. THIS SHALL APPLY TO ALL NEW CONCRETE WALLS, SLABS, PADS, TOPPINGS, AND REPAIRS.

C. MASONRY:

1. ALL MASONRY MATERIALS AND WORKMANSHIP SHALL BE IN ACCORDANCE WITH THE LATEST EDITION OF ACI 530.
2. CONCRETE MASONRY UNITS SHALL BE ASTM C90. JOINT REINFORCING SHALL BE ASTM A82. PORTLAND CEMENT SHALL BE ASTM C150 TYPE I OR II. GROUT SHALL BE ASTM C476 TYPE 1. MORTAR SHALL BE ASTM C270 TYPE S. MORTAR SHALL NOT BE USED WHERE GROUT IS SPECIFIED.
3. ALL REINFORCING SHALL BE ASTM A615 WITH 60,000 PSI YIELD STRENGTH.
4. MASONRY SHALL BE LAID IN RUNNING BOND, UNLESS NOTED OTHERWISE, AND SHALL HAVE CORNER AND END BLOCKS AT CORNERS, ENDS, AND OPENINGS. JOINTS SHALL BE TOOLED CONCAVE.
5. HORIZONTAL JOINT REINFORCING SHALL BE GALVANIZED LADDER TYPE REINFORCING WITH W1.7 WIRES. JOINT REINFORCING SHALL BE INSTALLED IN EVERY OTHER COURSE JOINT. PROVIDE JOINT REINFORCING IN TWO ADJACENT COURSES ABOVE AND BELOW ALL WALL OPENINGS. CORNERS AND INTERSECTIONS SHALL HAVE PREFABRICATED UNITS. END LAPS SHALL BE 6".
6. FILL CONCRETE CORES WITH GROUT AT BEAM, JOIST AND LINTEL BEARING.
7. BRICK: ASTM C 216, GRADE SW, TYPE FBS, STANDARD MODULAR SIZE (4" X 8" X 2 2/3" HIGH NOMINAL); COLOR, TEXTURE AND APPEARANCE OF BRICK AND MORTAR JOINTS SHALL MATCH THAT OF EXISTING BUILDING, AS APPROVED BY THE ENGINEER AND OWNER PRIOR TO BEGINNING THE WORK. PROVIDE SAMPLES TO OWNER ON SITE FOR REVIEW AND APPROVAL PRIOR TO ORDERING MATERIALS.

D. EMBEDDED CONDUITS AND PIPES:

1. ALL ELECTRICAL AND INSTRUMENTATION CONDUIT EMBEDDED IN CONCRETE SHALL BE INSTALLED, ARRANGED, AND SPACED AS PER THE REQUIREMENTS OF ACI 318, SECTION 6.3. REQUIREMENTS INCLUDE, BUT ARE NOT LIMITED TO, THE FOLLOWING:
2. CONDUITS SHALL HAVE A NOMINAL INSIDE DIAMETER NOT OVER 2 INCHES AND ARE SPACED NOT BE LESS THAN 3 DIAMETERS ON CENTER. PROVIDE ADDED LENGTHS AS NEEDED TO ROUTE CONDUIT IN A MANNER THAT MINIMIZES CROSSING OF DIFFERENT CONDUIT RUNS. WHERE CONDUITS CROSS, PROVIDE A MINIMUM VERTICAL SEPARATION OF 1 1/2" BETWEEN CONDUITS.
3. CONDUITS SHALL HAVE A MINIMUM OF 3 INCHES OF CONCRETE COVER.
4. CONDUITS SHALL NOT BE LARGER IN OUTSIDE DIAMETER THAN 1/3 THE OVERALL THICKNESS OF THE OVERALL THICKNESS OF THE SLAB OR WALL IN WHICH THEY ARE EMBEDDED. EMBEDMENT LONGITUDINALLY WITHIN BEAMS SHALL NOT BE PERMITTED.
5. PROVIDE ADDITIONAL REINFORCEMENT AROUND ALL GROUPS OF CONDUITS WHICH STUB UP THROUGH SLABS OR PENETRATE WALLS AS PER STANDARD STRUCTURAL DETAILS FOR OPENINGS IN SLABS OR WALLS.
6. CONDUIT PLACEMENT SHALL NOT IMPAIR SIGNIFICANTLY THE STRENGTH OF THE CONSTRUCTION, AS APPROVED BY THE ENGINEER.

E. PENETRATIONS AND EQUIPMENT PADS:

1. CONTRACTOR TO VERIFY THE NUMBER, SIZE, AND LOCATIONS OF ALL EQUIPMENT PADS AND PENETRATIONS THROUGH FLOOR SLABS, WALLS, CEILINGS AND ROOF PRIOR TO CONCRETE PLACEMENT (REFER TO MECHANICAL, HVAC, PLUMBING, AND ELECTRICAL DRAWINGS). ALL PENETRATIONS AND EQUIPMENT PADS ARE NOT SHOWN ON THE STRUCTURAL DRAWINGS.
2. PROVIDE WATERTIGHT SEAL FOR ALL PIPE PENETRATIONS IN WALLS AND FLOORS.
3. PROVIDE ADDITIONAL REINFORCEMENT AT WALL AND SLAB OPENINGS PER STANDARD DETAILS.
4. THE GENERAL CONTRACTOR SHALL BE RESPONSIBLE FOR PROVIDING AND SEALING PENETRATIONS WHICH ARE 4" DIAMETER/4"X4" SQUARE OR LARGER, INCLUDING PENETRATIONS REQUIRED BY FILED SUB-BID WORK.

F. ALL STAINLESS STEEL FOR THIS PROJECT SHALL BE U.S.-MADE, 316 STAINLESS STEEL UNLESS OTHERWISE NOTED.

WOODARD & CURRAN
980 Washington Street, Suite 325N
Dedham, Massachusetts 02026
800.446.5518 | www.woodardcurran.com
COMMITMENT & INTEGRITY DRIVE RESULTS

THIS DOCUMENT IS THE PROPERTY OF WOODARD & CURRAN INC. AND ITS CLIENT. REPRODUCTION OR MODIFICATION WITHOUT WRITTEN PERMISSION IS PROHIBITED.

COMMONWEALTH OF MASSACHUSETTS — JAMES P. STURGIS — STRUCTURAL — No. 43268 — REGISTERED PROFESSIONAL ENGINEER

REV	DESCRIPTION	DATE
B	ISSUE FOR BID	3/11/15
A	FOR MASSDEP REVIEW	07/18/14

DESIGNED BY: JPS | CHECKED BY: JPS
DRAWN BY: DMB | 224802-S-001.DWG

STRUCTURAL LEGEND ABBREVIATIONS, & NOTES

LOWELL REGIONAL WATER UTILITY
LOWELL, MASSACHUSETTS

WATER SYSTEM IMPROVEMENTS

JOB NO.: 224802.20
DATE: MARCH 2015
SCALE: AS NOTED
SHEET: 10 OF 51

ISSUE FOR BID

S-001

24x36 SHEET 1:1
\\wc\shared\Projects\224802 lowell ma - water system improvement pef 2011\wip\Drawings\Structural\224802-S-001.dwg, Mar 02, 2015 - 4:21pm

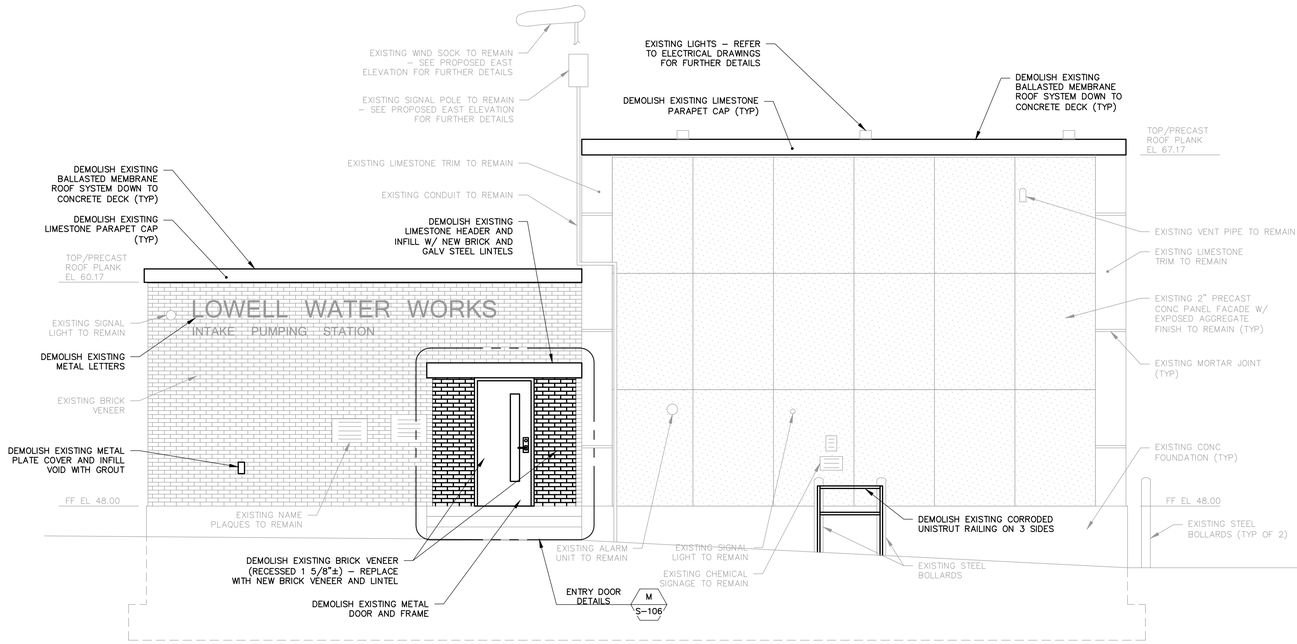

EXISTING EAST ELEVATION

SCALE: 1/4" = 1'-0"

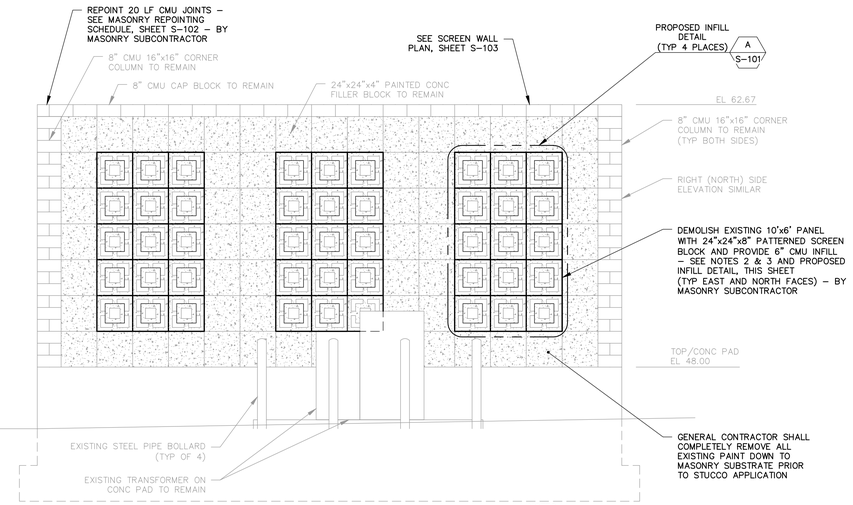

A S-101 PROPOSED INFILL DETAIL

SCALE: 1/4" = 1'-0"

BAR SCALE
1/4" = 1'-0"
CHECK GRAPHIC SCALE BEFORE USING

CEMENT STUCCO FINISH SCHEDULE					
AREA/ ELEV	MARK	COLOR	PROFILE	SF	REMARKS
1/EAST	A1	A – DARKER	+1-1/2"	63	CREATE 1-1/2" PROFILE W/ WOOD BLOCKING
1/EAST	B1	B – LIGHTER	+0"	225	APPLY DIRECTLY TO MASONRY (NO BLOCKING)
2/EAST	A2	A – DARKER	+1-1/2"	106	CREATE 1-1/2" PROFILE W/ WOOD BLOCKING
2/EAST	B2	B – LIGHTER	+0"	432	APPLY DIRECTLY TO MASONRY (NO BLOCKING)
3/EAST*	A3	A – DARKER	+1-1/2"	166	CREATE 1-1/2" PROFILE W/ WOOD BLOCKING
3/EAST*	B3	B – LIGHTER	+0"	492	APPLY DIRECTLY TO MASONRY (NO BLOCKING)
4/NORTH	A4	A – DARKER	+1-1/2"	66	CREATE 1-1/2" PROFILE W/ WOOD BLOCKING
4/NORTH	B4	B – LIGHTER	+0"	122	APPLY DIRECTLY TO MASONRY (NO BLOCKING)
5/SOUTH	A5	A – DARKER	+1-1/2"	79	CREATE 1-1/2" PROFILE W/ WOOD BLOCKING
5/SOUTH	B5	B – LIGHTER	+0"	326	APPLY DIRECTLY TO MASONRY (NO BLOCKING)
6/SOUTH	A6	A – DARKER	+1-1/2"	69	CREATE 1-1/2" PROFILE W/ WOOD BLOCKING
6/SOUTH	B6	B – LIGHTER	+0"	185	APPLY DIRECTLY TO MASONRY (NO BLOCKING)
TOTAL SF FOR UNIT PRICE BID ITEM				2331	

* SEE NOTE 2

NOTES:

1. UNIT PRICE BID ITEM: MASONRY SUBCONTRACTOR SHALL PROVIDE CEMENT STUCCO FINISH ON AREAS 1, 2, 3, 4, 5, AND 6 AS SHOWN BUILDING ELEVATIONS. REFER TO STUCCO FINISH SCHEDULE, THIS SHEET, AND SPECIFICATION SECTION 09 24 23. STUCCO COLOR SELECTION SHALL BE MADE BY THE OWNER. PROVIDE MIN 10' x 10' MOCK-UP PANEL. SEE TYPICAL STUCCO CEMENT SECTION 1, SHEET S-102.
2. ELEVATION AND STUCCO UPGRADES SHOWN FOR AREA 3 SHALL EXTEND 12'-8" AROUND NORTHEAST CORNER TO NORTH ELEVATION. PROVIDE STUCCO FINISH ON THE FRONT FACES OF SCREEN WALL; BACK FACE AND ALL OTHER EXPOSED SURFACES SHALL BE PAINTED AS SPECIFIED IN DIVISION 09.
3. PATTERNED BLOCK DEMOLITION IN SCREEN WALL: MASONRY SUBCONTRACTOR SHALL BE RESPONSIBLE FOR SHORING/TEMPORARILY SUPPORTING MASONRY ABOVE AND AROUND DEMOLITION AREA TO PROTECT WALL FROM DAMAGE. IF NECESSARY, MASONRY SUBCONTRACTOR SHALL REMOVE AND REPLACE MASONRY DIRECTLY ABOVE DEMOLITION AREA. ALL WORK SHALL BE PERFORMED AS SPECIFIED IN SECTION 04 20 00.
4. WALL-MOUNTED ITEMS SUCH AS NAME PLAQUES, SECURITY BOXES, SIGNAGE, CONDUITS, LIGHTS, ETC, SHALL BE REMOVED AND RE-INSTALLED BY GENERAL CONTRACTOR (EXCEPT ELECTRICAL ITEMS ARE BY ELECTRICAL SUBCONTRACTOR) AFTER STUCCO FINISH WORK IS COMPLETE. NOT ALL ITEMS ARE SHOWN – CONTRACTOR SHALL BE RESPONSIBLE TO FIELD VERIFY PRIOR TO BIDDING.
5. FOUNDATION COATING: SEE NOTE 6 FOR CLEANING REQUIREMENTS. PROVIDE COATING ON ALL FOUNDATION WALLS ABOVE-GROUND AS SHOWN ON THE DRAWINGS AND AS SPECIFIED IN DIVISION 09 – BY PAINTING SUBCONTRACTOR.
6. PRESSURE-WASH OR OTHERWISE CLEAN ALL BUILDING EXTERIOR SURFACES TO RECEIVE CEMENT STUCCO FINISH, FOUNDATION CONCRETE EXPOSED TO VIEW, AND LIMESTONE TRIM, AS REQUIRED TO REMOVE ALL VISIBLE MOLD, EFFLORESCENCE, AND OTHER DISCOLORATIONS – BY GENERAL CONTRACTOR.

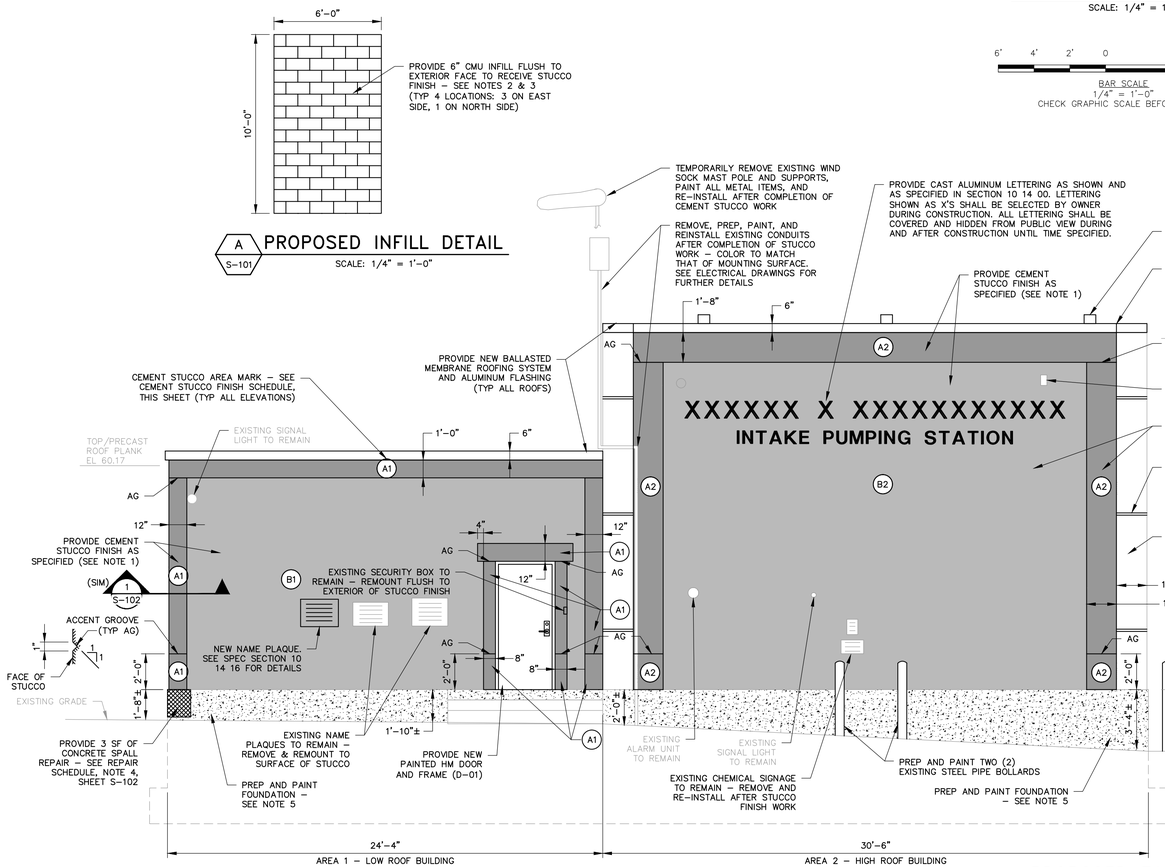

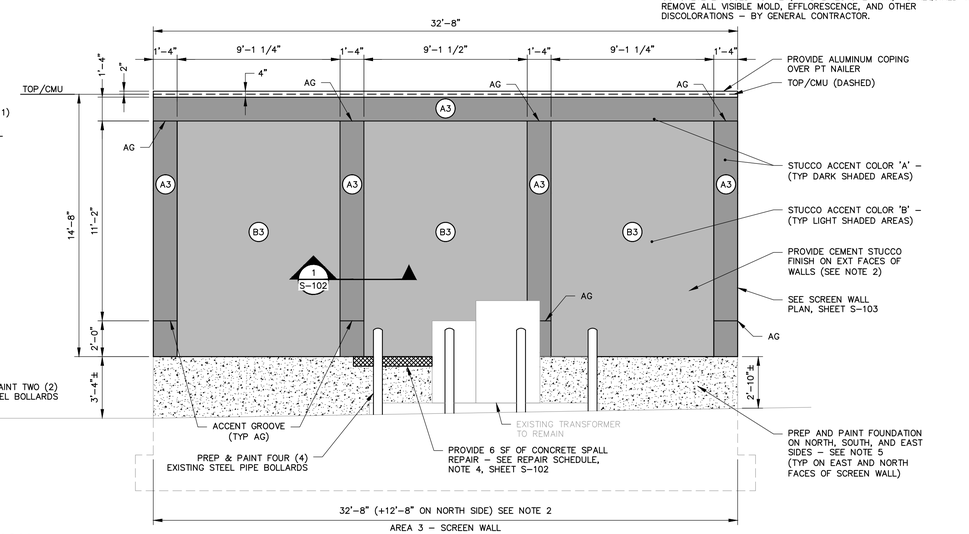

PROPOSED EAST ELEVATION

SCALE: 1/4" = 1'-0"

ISSUE FOR BID

980 Washington Street, Suite 325N
Dedham, Massachusetts 02026
800.446.5518 | www.woodardcurran.com
WOODARD & CURRAN
COMMITMENT & INTEGRITY DRIVE RESULTS

THIS DOCUMENT IS THE PROPERTY OF WOODARD & CURRAN INC., AND ITS CLIENT. REPRODUCTION OR MODIFICATION WITHOUT WRITTEN PERMISSION IS PROHIBITED.

COMMONWEALTH OF MASSACHUSETTS
JAMES P. STUROS
STRUCTURAL
No. 49471
REGISTERED PROFESSIONAL ENGINEER
3-27-15

REV.	DESCRIPTION	DATE
A	ISSUE FOR BID	3/11/15
B	FOR MASSDEP REVIEW	07/18/14

DESIGNED BY: JPS
DRAWN BY: DMB
CHECKED BY: JPS
224802-S-101.DWG

RAW WATER PUMP STATION
BUILDING ELEVATIONS - 1

LOWELL REGIONAL WATER UTILITY
LOWELL, MASSACHUSETTS

WATER SYSTEM IMPROVEMENTS

JOB NO.: 224802.20
DATE: MARCH 2015
SCALE: AS NOTED
SHEET: 11 OF 51

S-101

\\wc\shared\Projects\224802 lowell ma - water system improvement pef 2011\wip\Drawings\Structural\224802-S-101.dwg, Mar 02, 2015 - 4:21pm

24x36 SHEET
1:1

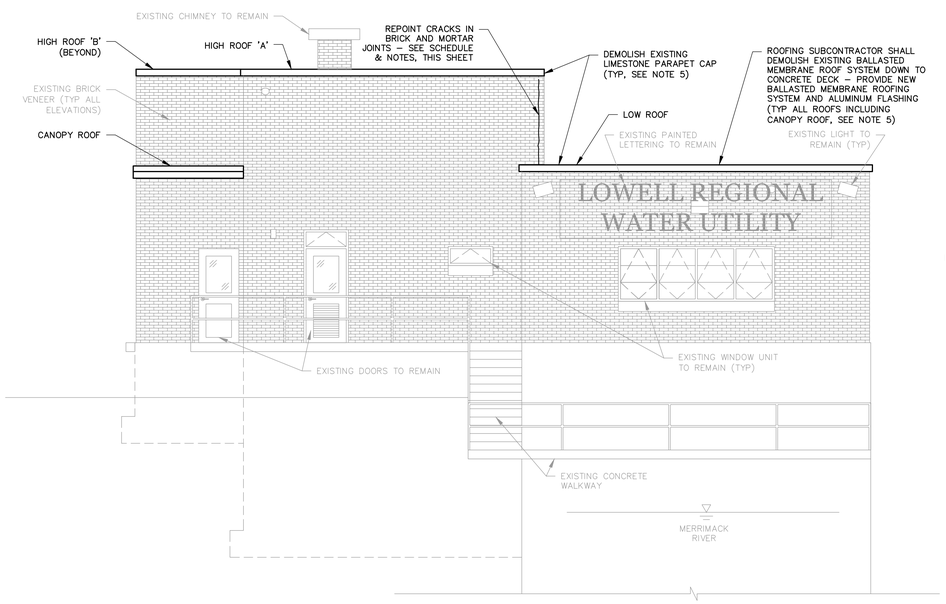

PROPOSED WEST ELEVATION

SCALE: 3/16" = 1'-0"

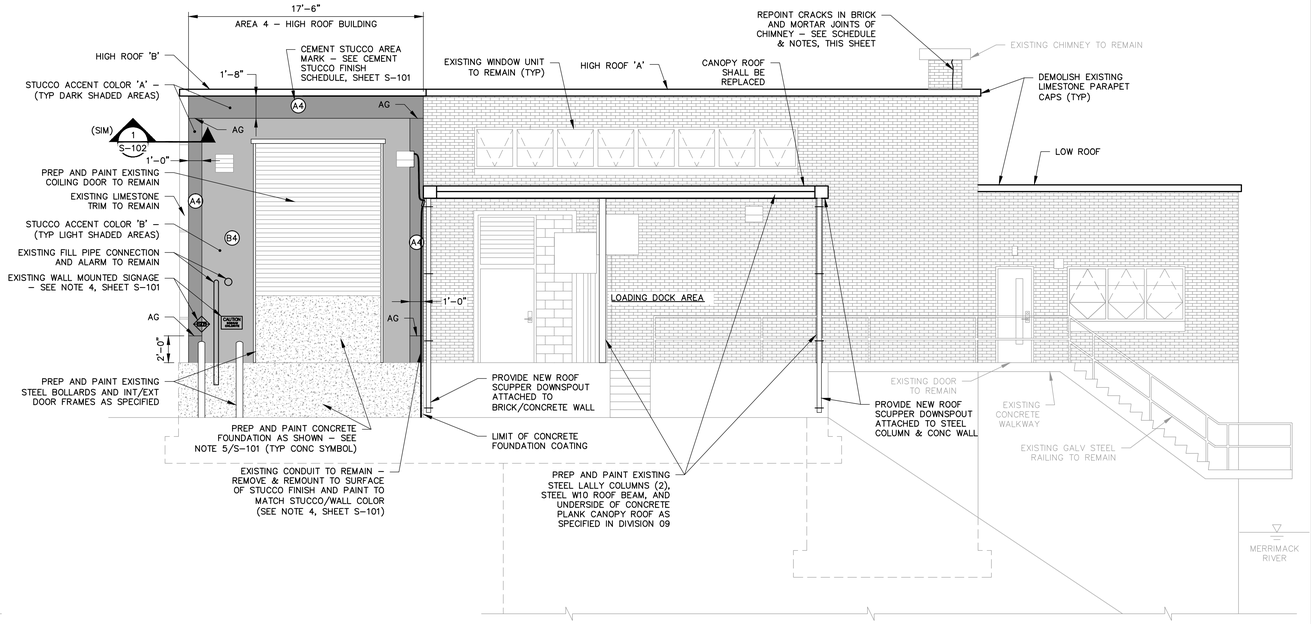

PROPOSED NORTH ELEVATION

SCALE: 3/16" = 1'-0"

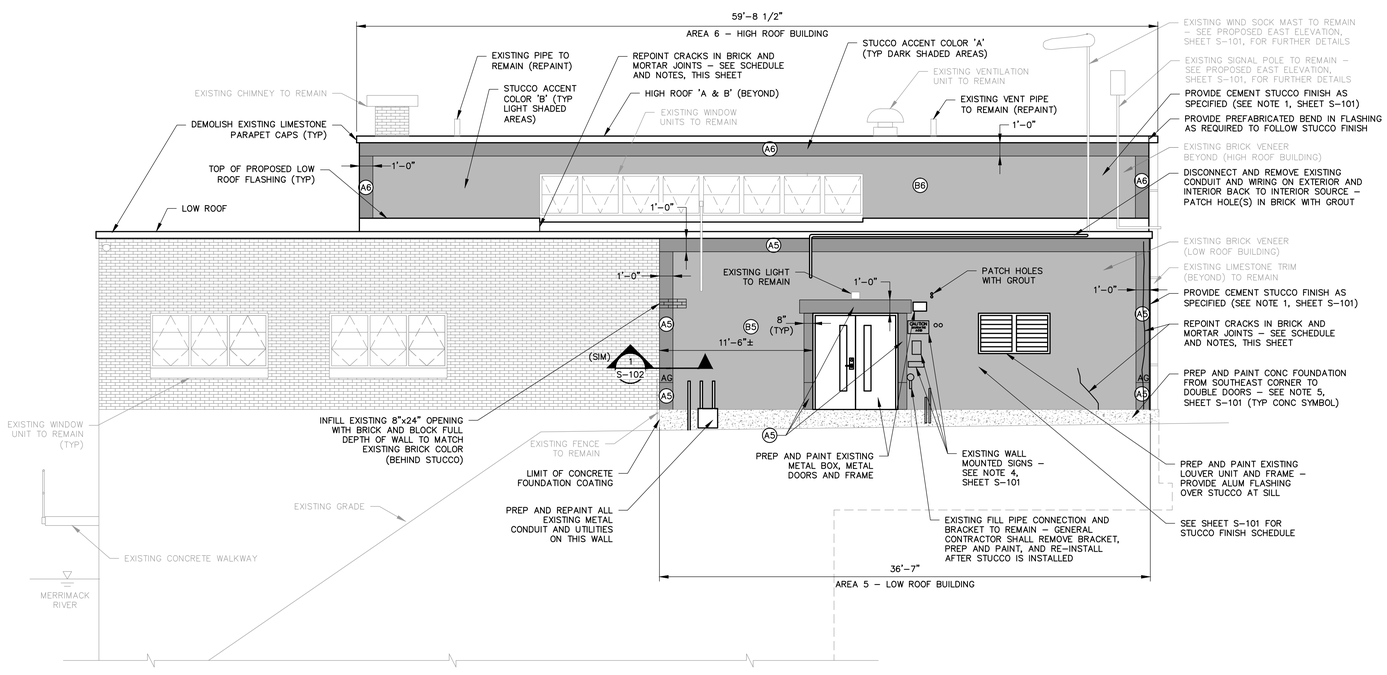

PROPOSED SOUTH ELEVATION

SCALE: 3/16" = 1'-0"

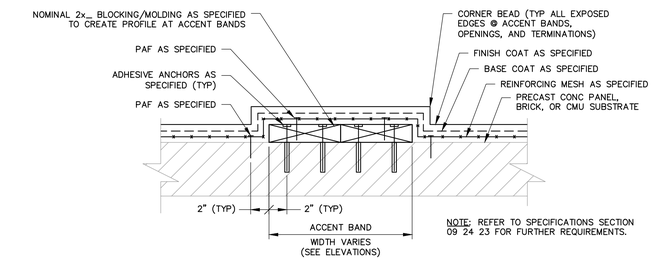

NOTE: REFER TO SPECIFICATIONS SECTION 09 24 23 FOR FURTHER REQUIREMENTS.

TYPICAL CEMENT STUCCO SECTION

SCALE: NTS

1 S-101 / S-102

MASONRY REPOINTING SCHEDULE

BUILDING	ELEVATION	SURFACE	QUANTITY	REMARKS
LOW ROOF	SOUTH	BRICK	13 LF	NEAR SOUTHEAST CORNER
LOW ROOF	SOUTH	BRICK	5 LF	SOUTHEAST OF LOUVER
HIGH ROOF	SOUTH	BRICK	5 LF	BELOW WEST CORNER OF WINDOWS
HIGH ROOF	WEST	BRICK	8 LF	NEAR SOUTHWEST CORNER
HIGH ROOF	NORTH	BRICK	4 LF	CHIMNEY ON WEST EDGE
HIGH ROOF	EAST	LIMESTONE	10 LF	REPOINT DETERIORATED JOINTS
SCREEN WALL	EAST	CMU	20 LF	CMU CAP AND CORNER COLUMN
MISC	MISC	MISC	35 LF	FIELD DETERMINE
–	–	–	100 LF	TOTAL ESTIMATED QUANTITY

CONSTRUCTION NOTES:

1. MASONRY REPOINTING: ALL BRICK AND CMU REPOINTING SHALL BE PERFORMED IN STRICT ACCORDANCE WITH THE REPOINTING APPENDIX OF C-270, BRICK INDUSTRY ASSOCIATION (BIA) TECH NOTE #7F, AND SPECIFICATION SECTION 04 20 00. REPOINTED JOINTS SHALL MATCH EXISTING PROFILE (FLUSH FOR CMU/BRICK CRACKS, AND TOOLED FOR MORTAR JOINTS) AND MORTAR COLOR SHALL MATCH EXISTING, AS APPROVED BY THE ENGINEER. CRACKS IN FACE OF CMU/BRICK SHALL BE ROUTED AND REPOINTED. PAYMENT SHALL BE MADE ON A UNIT-PRICE BASIS AS LISTED IN THE BID FORM – BY MASONRY SUBCONTRACTOR.
2. PRE-CONSTRUCTION SURVEY – MASONRY SUBCONTRACTOR SHALL CONDUCT A PRE-CONSTRUCTION SURVEY IN THE PRESENCE OF THE ENGINEER TO IDENTIFY AND DELINEATE THE CRACKS AND JOINTS TO BE REPOINTED.
3. MASONRY SUBCONTRACTOR SHALL BE RESPONSIBLE FOR ALL MASONRY-RELATED WORK AND REPOINTING AS SHOWN ON THE DRAWINGS AND AS SPECIFIED.
4. CONCRETE SPALL REPAIR: WHERE SHOWN, PROVIDE CONCRETE REPAIR TO FOUNDATION WALLS. SAW-CUT PERIMETER OF REPAIR AREA TO A MINIMUM DEPTH OF 1/4" AND REMOVE ALL CRACKED, DELAMINATED, UNSOUND CONCRETE WITHIN SAWCUT TO A MINIMUM DEPTH OF 1/2" AS PER SPECIFICATION SECTION 03 01 05. PROVIDE 3/16" x 3 1/4" TAPCON SCREWS @ 4" OC WITH MIN 2" COVER OVER REPAIR AREA AND 2" MIN EMBEDMENT FOR MECHANICAL ATTACHMENT TO EXISTING SUBSTRATE. ASSUMED QUANTITY IS 25 SF AT AN AVERAGE REPAIR DEPTH OF 2". PAYMENT SHALL BE MADE ON A UNIT-PRICE BASIS AS LISTED IN THE BID FORM. ALL CONCRETE SPALL REPAIR WORK SHALL BE THE GENERAL CONTRACTOR'S RESPONSIBILITY.
5. REPLACE ROOFING SYSTEM: ROOFING SUBCONTRACTOR SHALL DEMOLISH EXISTING BALLASTED MEMBRANE ROOFING SYSTEM AND LIMESTONE PARAPET COPING STONES DOWN TO PRECAST HOLLOW-CORE CONCRETE ROOF PLANK DECK. PROVIDE PARAPET UPGRADES, NEW TAPERED RIGID INSULATION, MEMBRANE ROOFING SYSTEM, AND ASSOCIATED FLASHING AS SPECIFIED AND AS SHOWN ON SHEET S-103.

6' 4' 2' 0 4' 8'

BAR SCALE
3/16" = 1'-0"
CHECK GRAPHIC SCALE BEFORE USING

ISSUE FOR BID

980 Washington Street, Suite 325N
Dedham, Massachusetts 02026
800.446.5518 | www.woodardcurran.com
COMMITMENT & INTEGRITY DRIVE RESULTS
WOODARD & CURRAN

THIS DOCUMENT IS THE PROPERTY OF WOODARD & CURRAN INC., AND ITS CLIENT. REPRODUCTION OR MODIFICATION WITHOUT WRITTEN PERMISSION IS PROHIBITED.

COMMONWEALTH OF MASSACHUSETTS
JAMES P. STUROS
STRUCTURAL
No. 44864
REGISTERED PROFESSIONAL ENGINEER
12-21-15

REV.	DESCRIPTION	DATE
B	ISSUE FOR BID	3/11/15
A	FOR MASSDEP REVIEW	07/18/14

DESIGNED BY: JPS
DRAWN BY: DMB
CHECKED BY: JPS
224802-S-102.DWG

RAW WATER PUMP STATION
BUILDING ELEVATIONS - 2

LOWELL REGIONAL WATER UTILITY
LOWELL, MASSACHUSETTS

WATER SYSTEM IMPROVEMENTS

JOB NO.: 224802.20
DATE: MARCH 2015
SCALE: AS NOTED
SHEET: 12 OF 51

S-102

\\wc\shared\Projects\224802 lowell mo - water system improvement pef 2011\wip\Drawings\Structural\224802-S-102.dwg, Mar 02, 2015 - 4:21pm

24x36 SHEET
1:1

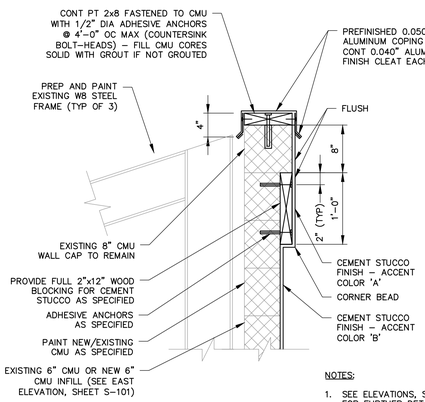

SECTION 2 S-103
SCALE: 1" = 1'-0"

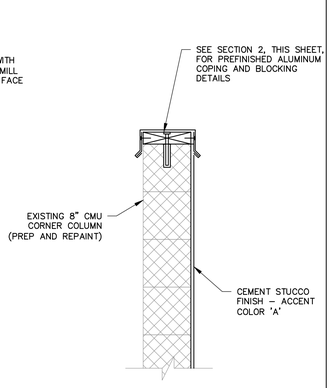

SECTION 3 S-103
SCALE: 1" = 1'-0"

NOTES:

1. SEE ELEVATIONS, SHEET S-101, FOR FURTHER DETAILS.
2. SEE TYPICAL CEMENT STUCCO SECTION 1, SHEET S-102, FOR FURTHER DETAILS.
3. REFER TO SPECIFICATION SECTION 09 24 23 FOR FURTHER REQUIREMENTS.

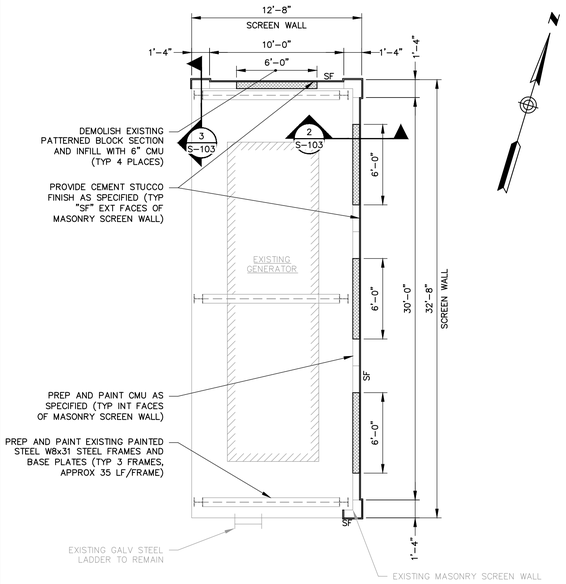

SCREEN WALL PLAN
SCALE 3/16" = 1'-0"

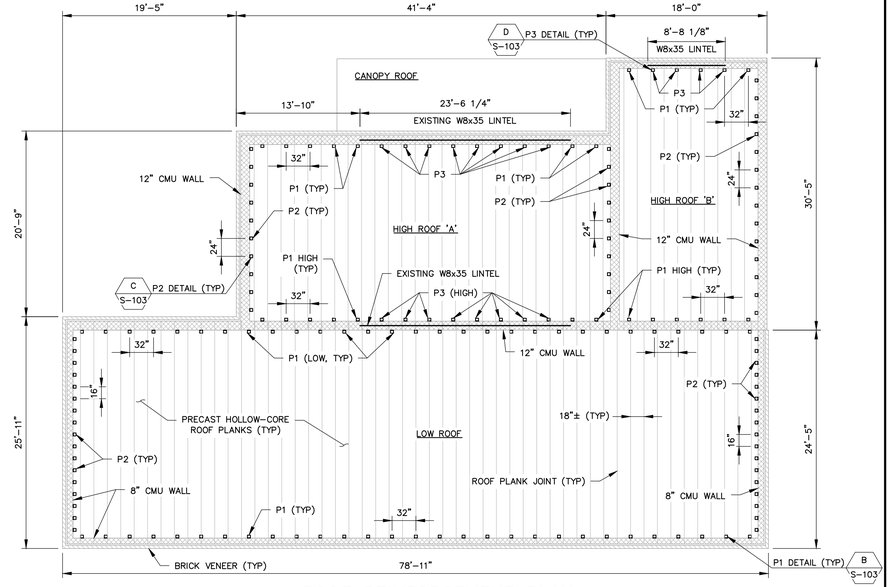

ROOF REINFORCEMENT PLAN
SCALE 1/8" = 1'-0"

REINFORCEMENT PLATE SCHEDULE			
MARK	DESCRIPTION	MATERIAL	REMARKS
P1	L6x4x1/4x4" LG (LLV)	PAINTED STEEL	ROOF PLANK TO CMU WALL/ALONG PLANK BEARING ENDS
P2	L6x6x1/4x4" LG	PAINTED STEEL	ROOF PLANK TO CMU WALL/PARALLEL TO PLANK SPAN
P3	PLATE 1/4x4x4	PAINTED STEEL	ROOF PLANK TO W8x35 LINTEL

NOTES:

1. PROVIDE REINFORCEMENT PLATES ALONG UNDERSIDE OF PRECAST ROOF PLANKS AS SHOWN ON THE PLAN AND SCHEDULE, THIS SHEET. REINFORCEMENTS ARE PROVIDED TO STRUCTURALLY UPGRADE THE ROOF IN ACCORDANCE WITH IEBC 2009 AND MASSACHUSETTS STATE BUILDING CODE EIGHTH EDITION.
2. PLATE P1 SHALL BE LOCATED/ADJUSTED AS REQUIRED TO ENSURE THAT THE ANCHOR PENETRATES PLANK WITHIN A CORE AND NOT IN THE CONCRETE BETWEEN THE CORES, TO AVOID DAMAGE TO PRESTRESSED STRANDS.
3. PLATE P2 HAS TWO BOLT HOLES IN HORIZ LEG. PROVIDE AN ADHESIVE ANCHOR IN ONLY 1 OF THE 2 HOLES, AS REQUIRED TO ENSURE THAT THE ANCHOR PENETRATES PLANK WITHIN A CORE AND NOT IN THE CONCRETE BETWEEN THE CORES, TO AVOID DAMAGE TO PRESTRESSED STRANDS.
4. PRECAST ROOF PLANK ADHESIVE ANCHORS: PROVIDE 1/2" DIA SS THREADED ROD AND HARDWARE FOR USE WITH HILTI HIT-HY 70 ADHESIVE AND HIT-IC INTERNALLY THREADED INSERTS WITH 3 1/8" EMBEDMENT.
5. MASONRY WALL ADHESIVE ANCHORS: PROVIDE 1/2" DIA SS THREADED ROD AND HARDWARE FOR USE WITH HILTI HIT-HY 70 ADHESIVE AND HIS-N INSERTS.
6. CONTRACTOR SHALL BE RESPONSIBLE TO PROVIDE INTERIOR ACCESS TO UNDERSIDE OF ROOF DECK AS REQUIRED TO INSTALL ALL REINFORCEMENT PLATES AND TO WORK AROUND EXISTING EQUIPMENT AND UTILITIES. PLATE SPACING MAY BE MODIFIED, IF NECESSARY, TO AVOID CONFLICTS (AS APPROVED BY ENGINEER).
7. ALL ROOF REINFORCEMENT PLATES SHALL BE FURNISHED BY METALS SUBCONTRACTOR UNDER SPECIFICATION DIVISION 5. GENERAL CONTRACTOR SHALL PROVIDE ALL PLATE FASTENERS AND SHALL BE RESPONSIBLE FOR INSTALLATION OF ALL PLATES AND FASTENERS, INCLUDING FIELD WELDING BY AWS-CERTIFIED WELDERS.

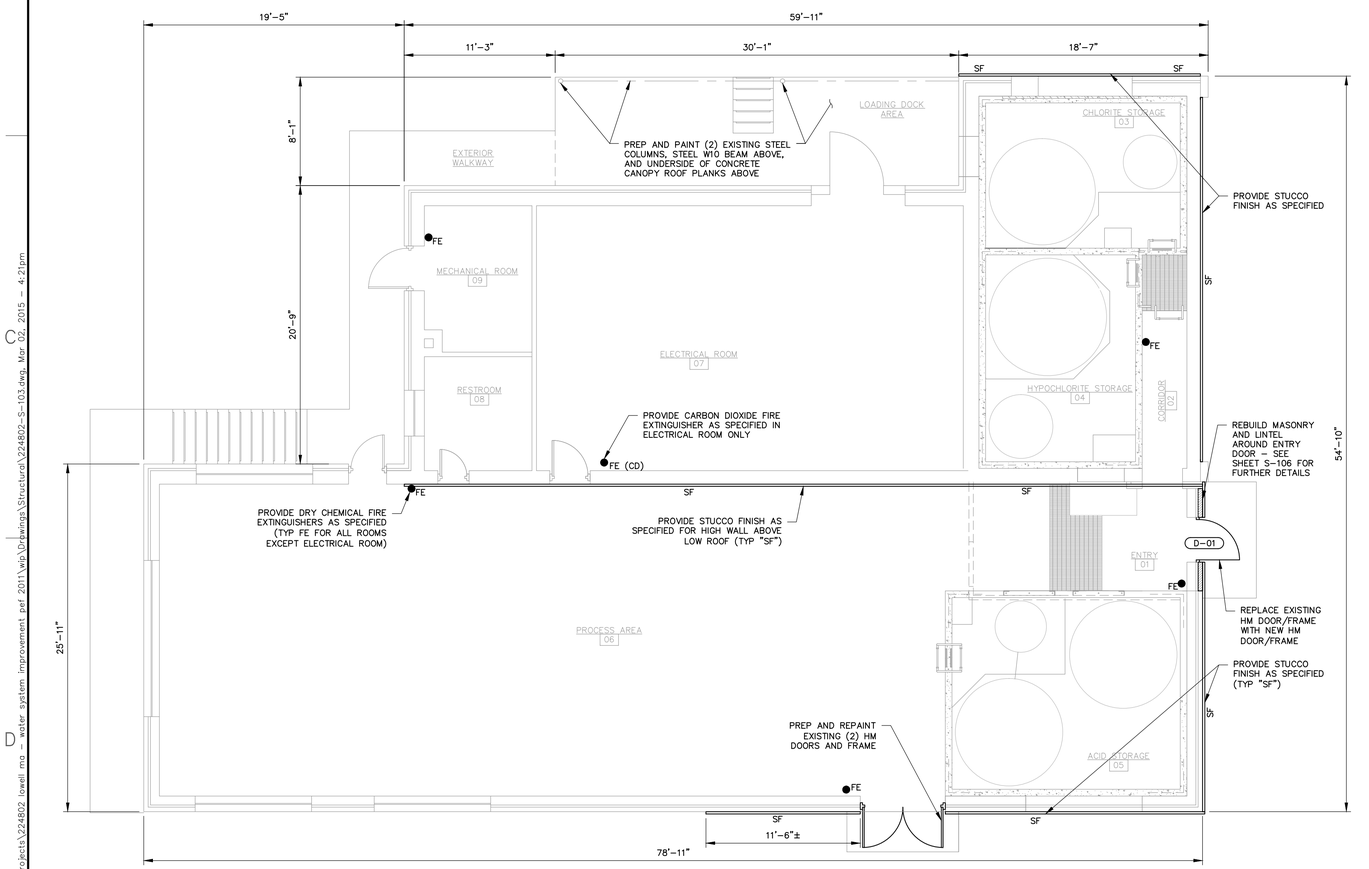

FLOOR PLAN
SCALE: 3/16" = 1'-0"

BAR SCALE
3/16" = 1'-0"
CHECK GRAPHIC SCALE BEFORE USING

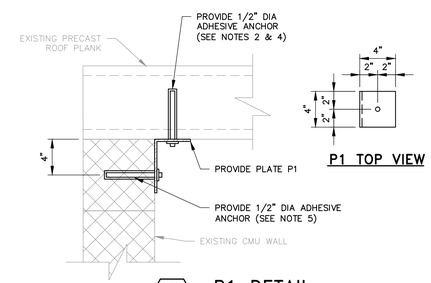

P1 TOP VIEW

B S-103 P1 DETAIL
SCALE: 1 1/2" = 1'-0"
(TYP PERPENDICULAR TO PLANK SPAN)

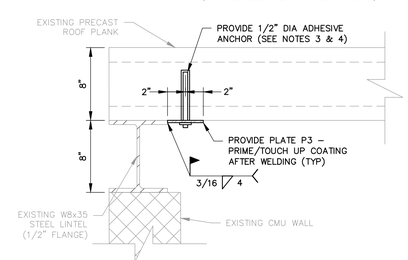

D S-103 P3 DETAIL
SCALE: 1 1/2" = 1'-0"
(TYP @ W8x35 LINTEL)

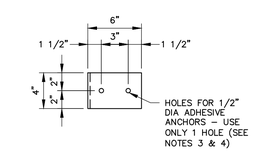

P2 TOP VIEW

C S-103 P2 DETAIL
SCALE: 1 1/2" = 1'-0"
(TYP PARALLEL TO PLANK SPAN)

ISSUE FOR BID

980 Washington Street, Suite 325N
Dedham, Massachusetts 02026
800.446.5518 | www.woodardcurran.com
COMMITMENT & INTEGRITY DRIVE RESULTS
WOODARD & CURRAN

THIS DOCUMENT IS THE PROPERTY OF WOODARD & CURRAN INC., AND ITS CLIENT. REPRODUCTION OR MODIFICATION WITHOUT WRITTEN PERMISSION IS PROHIBITED.

COMMONWEALTH OF MASSACHUSETTS
JAMES P. STUROS
STRUCTURAL
No. 45766
REGISTERED PROFESSIONAL ENGINEER
12-21-15

REV.	DESCRIPTION	DATE
B	ISSUE FOR BID	3/11/15
A	FOR MASSDEP REVIEW	07/18/14

DESIGNED BY: JPS
DRAWN BY: DMB
CHECKED BY: JPS
224802-S-103.DWG

RAW WATER PUMP STATION
PLANS, SECTIONS, & DETAILS

LOWELL REGIONAL WATER UTILITY
LOWELL, MASSACHUSETTS

WATER SYSTEM IMPROVEMENTS

JOB NO.: 224802.20
DATE: MARCH 2015
SCALE: AS NOTED
SHEET: 13 OF 51

S-103

\\wc\shared\Projects\224802 lowell ma - water system improvement pef 2011\wip\Drawings\Structural\224802-S-103.dwg, Mar 02, 2015 - 4:21pm

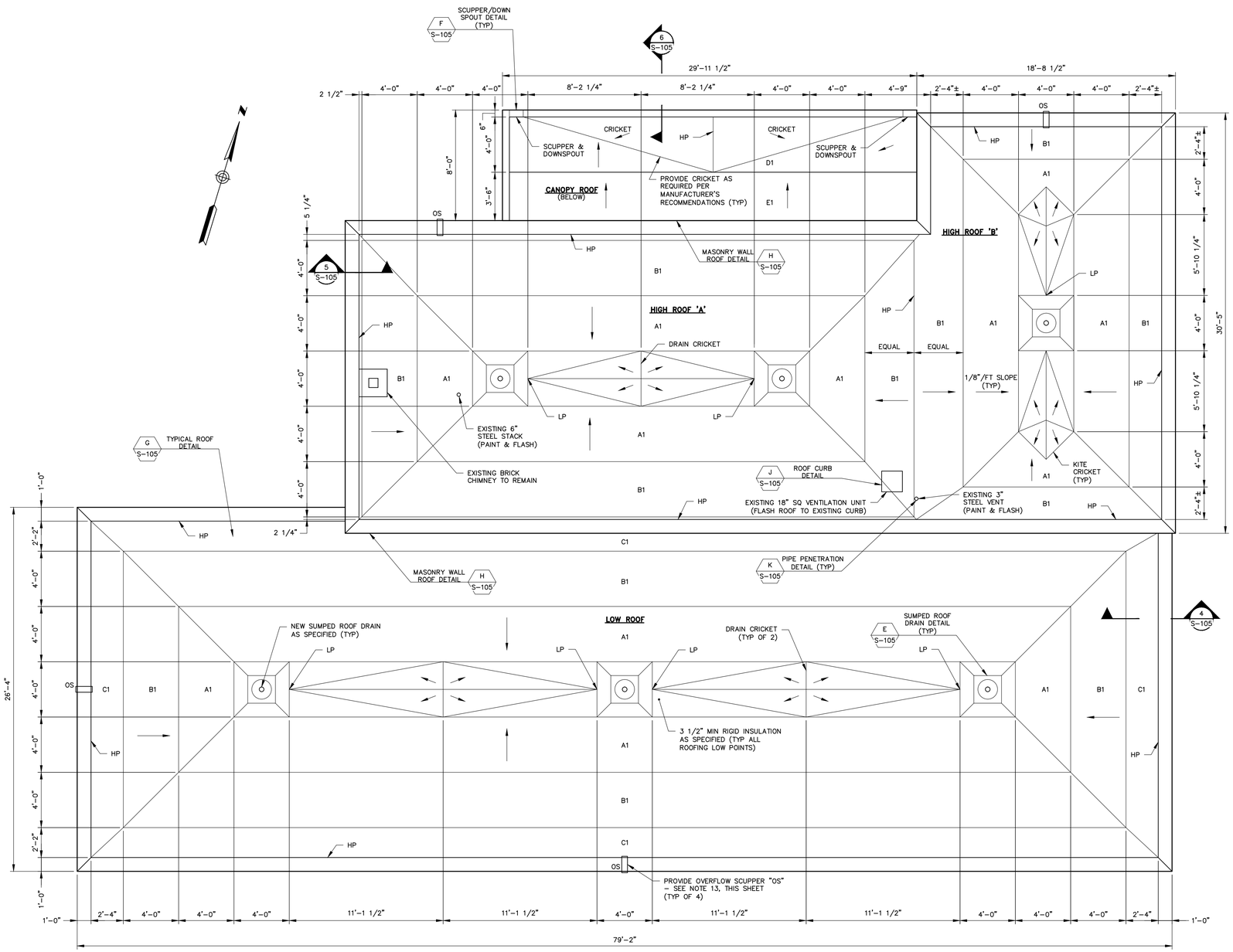

ROOFING PLAN

SCALE: 1/4" = 1'-0"

ROOFING NOTES

1. ALL ROOFING MEMBRANES, BALLAST STONE, LIMESTONE PARAPET CAPS, EXISTING INSULATION, FLASHING, CANTS, NAILERS AND OTHER MATERIALS SHALL BE REMOVED AND LEGALLY DISPOSE OF BY ROOFING SUBCONTRACTOR DOWN TO EXISTING ROOF DECK, AS REQUIRED TO INSTALL THE PROPOSED ROOFING SYSTEM. ALL WORK SHALL BE ACCOMPLISHED IN A MANNER SO AS NOT TO DAMAGE THE FRAMING, VERTICAL WALL SURFACES, OR OTHER SURFACES OR MATERIALS TO REMAIN IN PLACE.
2. ROOFING SUBCONTRACTOR SHALL INSPECT ALL SURFACES PRIOR TO INSTALLATION OF THE ROOFING SYSTEM. CONDITIONS DIFFERENT FROM THOSE INDICATED ON THE PLANS SHALL BE IMMEDIATELY BROUGHT TO THE ENGINEER'S ATTENTION. THESE CONDITIONS SHALL INCLUDE BUT NOT BE LIMITED TO ROOF DECKING IN NOTICEABLE POOR CONDITION (I.E. SAGS, CRACKS, GAPS, ETC.)
3. ROOF MEMBRANE MANUFACTURER SHALL BE CARLISLE 0.060" EPDM OR EQUAL. CONTRACTOR SHALL PROVIDE A MANUFACTURERS STANDARD 15-YEAR WARRANTY TO THE OWNER UPON COMPLETION AND ACCEPTANCE OF THE PROJECT BEFORE RETAINAGE WILL BE RELEASED.
4. ROOFING SUBCONTRACTOR SHALL MAKE ROOF WATERTIGHT EACH NIGHT DURING DEMOLITION AND CONSTRUCTION PHASES.
5. ROOF DRAIN LOCATIONS AND ROOF DIMENSIONS ARE APPROXIMATE AND SHALL BE FIELD VERIFIED PRIOR TO INSULATION FABRICATION. ROOF DRAINS DO NOT ALIGN EXACTLY AS SHOWN, AND WILL REQUIRE FIELD ADJUSTMENT.
6. ROOFING SUBCONTRACTOR SHALL ENSURE THAT ROOF DRAINS ARE SUMPED AND ADJUSTED TO ACHIEVE POSITIVE DRAINAGE AND THAT PONDING AROUND ROOF DRAINS DOES NOT OCCUR. REMOVE ANY CONSTRUCTION DEBRIS FROM ALL DRAINS AND FLUSH SYSTEM AFTER COMPLETION OF THE WORK.
7. PROVIDE NEW MIFAB R1200-M-B-C ROOF DRAINS, OR EQUAL, AS REQUIRED FOR A COMPLETE INSTALLATION WITH ALL PIPING, CLAMPS, ETC. TO CONNECT TO EXISTING ROOF DRAIN PIPING. ALL WORK SHALL BE PERFORMED IN CONFORMANCE WITH ALL APPLICABLE LOCAL, STATE, AND NATIONAL PLUMBING CODES.
8. ALL WOOD USED IN THE ROOF SHALL BE PRESSURE TREATED. NAILERS AT ROOF EDGES WILL BE INSTALLED AT MAXIMUM INSULATION HEIGHT.
9. INSULATION SHALL BE FULLY ADHERED TO THE CONCRETE DECK IN A PATTERN AND MANNER APPROVED BY THE ROOF MEMBRANE AND INSULATION MANUFACTURERS. INSULATION SHALL BE TAPERED AS SHOWN ON THE DRAWINGS, WITH MIN. 3" FLAT BASE LAYER WITH 1/2" PER FT. TAPERED AROUND DRAINS.
10. PIPE PENETRATIONS SHALL HAVE DEBRIS REMOVED FROM PIPE SURFACE TO PROVIDE A CLEAN PIPE SURFACE. INSTALL A PREFABRICATED PIPE FLASHING BOOT WITH HARDWARE TO PROVIDE A SECURE WATERTIGHT UNIT.
11. REMOVE EXISTING METAL FLASHING AND EXISTING NAILERS. INSTALL NEW 2x6 PT WOOD NAILERS TO MATCH INSULATION HEIGHT AND PREFINISHED ALUMINUM FLASHING CONTINUOUS AT PERIMETER.
12. PREFINISHED ALUMINUM EDGE FLASHING SHALL BE 0.050" ALUMINUM WITH BAKED ENAMEL FINISH (COLOR SELECTED BY OWNER). CONTINUOUS CLEATS SHALL BE 0.040" MILL-FINISH ALUMINUM. ALL JOINTS SHALL BE OVERLAPPED A MINIMUM OF 3" TO ALLOW FOR EXPANSION AND CONTRACTION WITH DOUBLE BEAD OF SEALANT APPLIED BETWEEN THE OVERLAPPED SECTIONS. ALL CORNER SECTIONS SHALL BE SHOP FABRICATED.
13. OVERFLOW SCUPPER: PROVIDE OVERFLOW SCUPPER (OS) WHERE INDICATED ON ROOF PLAN. SCUPPERS SHALL BE CONSTRUCTED OF SAME MATERIAL AS PREFINISHED ALUMINUM EDGE FLASHING AND SHALL BE CONTINUOUSLY FLASHED AND WATERTIGHT. SCUPPER SHALL EXTEND MIN 3" BEYOND FACE OF BUILDING WALL AND ELEVATION SHALL BE NO HIGHER THAN ROOFING/RIGID INSULATION HIGH POINT. SCUPPER CONSTRUCTION SHALL BE AS RECOMMENDED BY MANUFACTURER'S STANDARD DETAILS.
14. ROOFING SUBCONTRACTOR SHALL BE RESPONSIBLE TO PROVIDE ALL NEW ROOFING WORK, INCLUDING WOOD BLOCKING, AS SHOWN ON THE DRAWINGS. ROOFING SUBCONTRACTOR SHALL ALSO BE RESPONSIBLE FOR TEMPORARY ROOF COVERING DURING ROOFING DEMOLITION AND REPLACEMENT WORK.
15. SCREEN WALL COPING: ROOFING SUBCONTRACTOR SHALL BE RESPONSIBLE TO PROVIDE ALL LABOR AND MATERIALS ASSOCIATED WITH SCREEN WALL BLOCKING, CLEATS, PRE-FINISHED ALUMINUM COPING, AND CMU GROUTING AT ANCHOR BOLTS. SEE SHEET S-103 SCREEN WALL PLAN AND SECTIONS FOR FURTHER DETAILS.

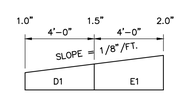

CANOPY ROOF

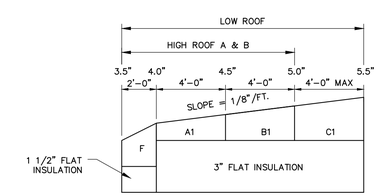

HIGH ROOF A & B, LOW ROOF

ROOF INSULATION PROFILES

SCALE: NTS

6' 4' 2' 0 4' 8'

BAR SCALE
1/4" = 1'-0"
CHECK GRAPHIC SCALE BEFORE USING

ISSUE FOR BID

980 Washington Street, Suite 325N
Dedham, Massachusetts 02026
800.446.5518 | www.woodardcurran.com
COMMITMENT & INTEGRITY DRIVE RESULTS
WOODARD & CURRAN

THIS DOCUMENT IS THE PROPERTY OF WOODARD & CURRAN INC., AND ITS CLIENT. REPRODUCTION OR MODIFICATION WITHOUT WRITTEN PERMISSION IS PROHIBITED.

COMMONWEALTH OF MASSACHUSETTS
JAMES P. STUROS
STRUCTURAL
No. 46,754
REGISTERED PROFESSIONAL ENGINEER
3-27-15

REV.	DESCRIPTION	DATE
-		
-		
-		
-		
A	ISSUE FOR BID	3/11/15
B	FOR MASSDEP REVIEW	07/19/14

DESIGNED BY: JPS
DRAWN BY: DMB
CHECKED BY: JPS
224802-S-104.DWG

RAW WATER PUMP STATION
ROOFING PLAN & NOTES

LOWELL REGIONAL WATER UTILITY
LOWELL, MASSACHUSETTS

WATER SYSTEM IMPROVEMENTS

JOB NO.:224802.20
DATE: MARCH 2015
SCALE: AS NOTED
SHEET: 14 OF 51

S-104

24x36 SHEET
1:1

\\wc\shared\Projects\224802 lowell ma - water system improvement pef 2011\wip\Drawings\Structural\224802-S-104.dwg, Mar 02, 2015 - 4:22pm

24x36 SHEET
1:1

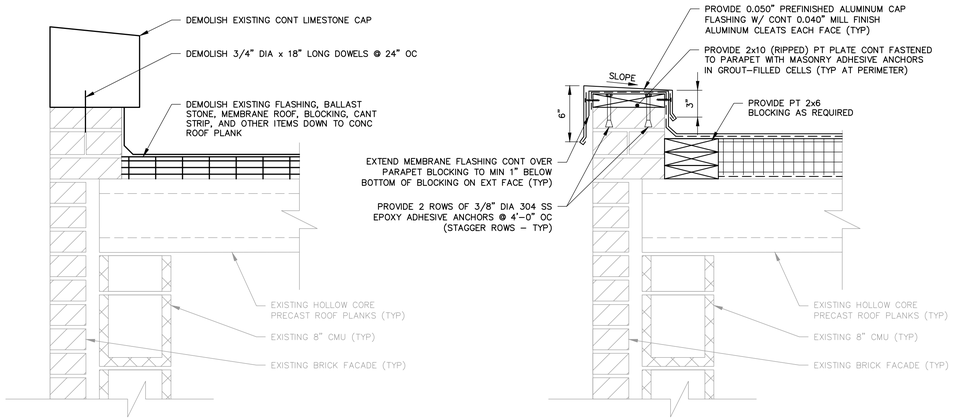

EXISTING

PROPOSED

TYPICAL ROOF EDGE SECTION (4 / S-104)

SCALE: 1 1/2" = 1'-0"

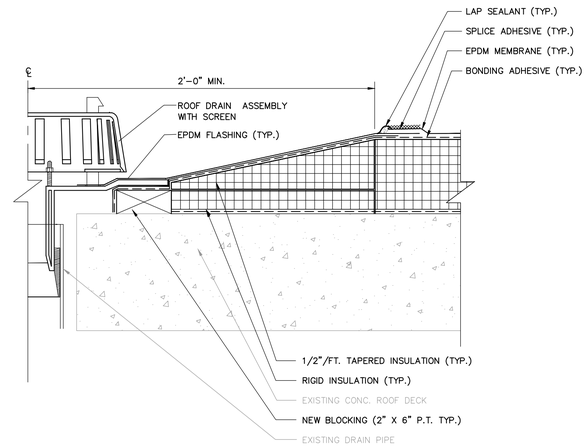

E / S-104 SUMPED ROOF DRAIN DETAIL

SCALE: N.T.S.

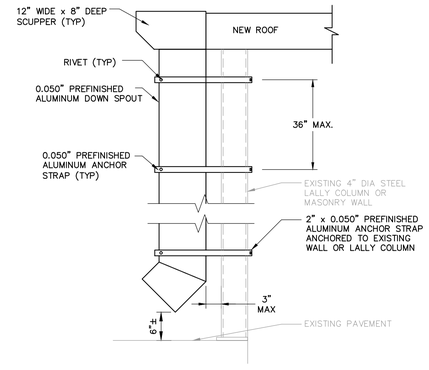

SIDE VIEW

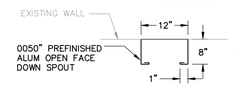

PLAN VIEW

NOTES:

1. CONTRACTOR SHALL INSTALL PER MANUFACTURER'S RECOMMENDATION IF CONFIGURATION IS DIFFERENT FROM THIS DETAIL.
2. ALL SCUPPER/GUTTER COMPONENTS SHALL BE 0.050" ALUMINUM WITH COLOR FINISH TO MATCH ROOF EDGE FLASHING.

F / S-104 SCUPPER/DOWN SPOUT DETAIL

SCALE: N.T.S.

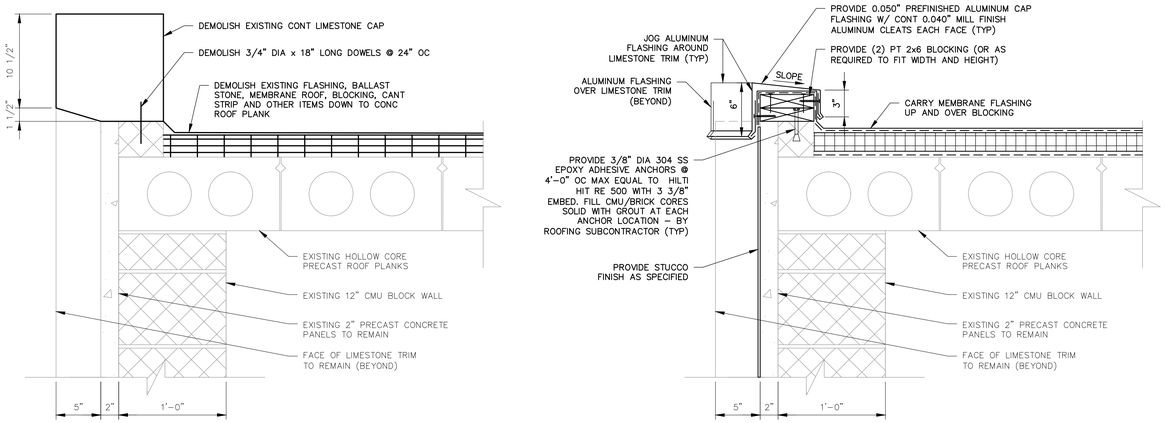

EXISTING

PROPOSED

EAST HIGH ROOF SECTION (5 / S-104)

SCALE: 1 1/2" = 1'-0"

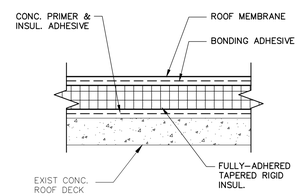

G / S-104 TYPICAL ROOF DETAIL

SCALE: N.T.S.

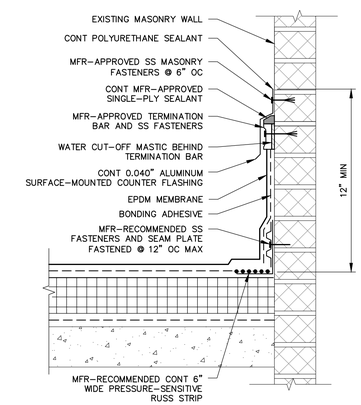

H / S-104 MASONRY WALL ROOF DETAIL

SCALE: N.T.S.

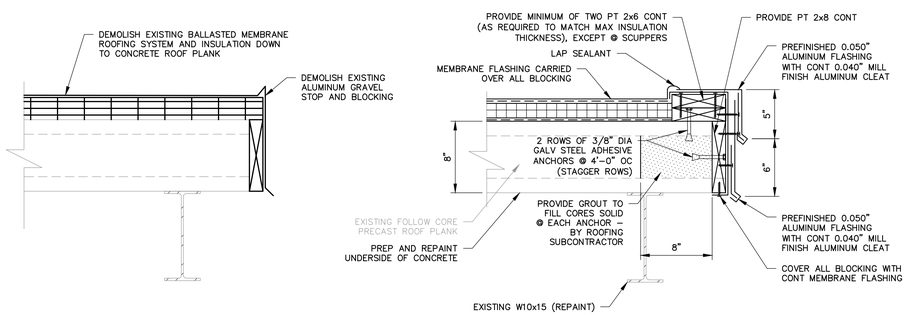

EXISTING

PROPOSED

CANOPY ROOF SECTION (6 / S-104)

SCALE: 1 1/2" = 1'-0"

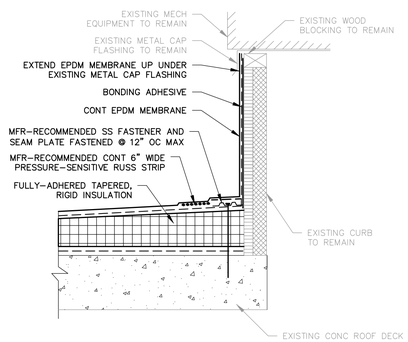

J / S-104 ROOF CURB DETAIL

SCALE: N.T.S.

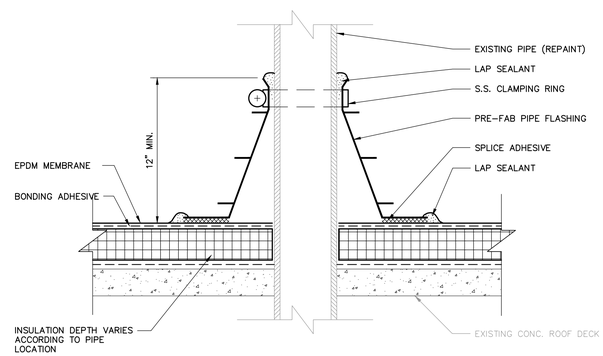

K / S-104 PIPE PENETRATION DETAIL

SCALE: N.T.S.

980 Washington Street, Suite 325N
Dedham, Massachusetts 02026
800.446.5518 | www.woodardcurran.com
COMMITMENT & INTEGRITY DRIVE RESULTS
WOODARD & CURRAN

THIS DOCUMENT IS THE PROPERTY OF WOODARD & CURRAN INC., AND ITS CLIENT. REPRODUCTION OR MODIFICATION WITHOUT WRITTEN PERMISSION IS PROHIBITED.

COMMONWEALTH OF MASSACHUSETTS
JAMES P. STUROS
STRUCTURAL
No. 43784
REGISTERED PROFESSIONAL ENGINEER
2-27-15

REV.	DESCRIPTION	DATE
B	ISSUE FOR BID	3/11/15
A	FOR MASSDEP REVIEW	07/18/14

DESIGNED BY: JPS
DRAWN BY: DMB
CHECKED BY: JPS
224802-S-105.DWG

RAW WATER PUMP STATION
ROOFING SECTIONS & DETAILS

LOWELL REGIONAL WATER UTILITY
LOWELL, MASSACHUSETTS

WATER SYSTEM IMPROVEMENTS

JOB NO.:224802.20
DATE: MARCH 2015
SCALE: AS NOTED
SHEET: 15 OF 51

ISSUE FOR BID

S-105

\\wc\shared\Projects\224802 lowell ma - water system improvement pef 2011\wip\Drawings\Structural\224802-S-105.dwg, Mar 02, 2015 - 4:22pm

24x36 SHEET
1:1

DOOR SCHEDULE

DOOR #	ROOM NAME	DOORS			FRAME TYPE	HDW SET	DETAILS			REMARKS
		TYPE	WIDTH	HEIGHT			HEAD	JAMB	SILL	
D-01	PROCESS AREA	D1	3'-0"	7'-0"	F1	1	SEE ENTRY DOOR DETAILS			SEE PROPOSED ELEVATION, THIS SHEET

DOOR HARDWARE SCHEDULE

HARDWARE SET #	EXTERIOR DOOR	HINGES (S.S.)	LOCKSET (S.S.)	LOCK FUNCTION	CLOSER	WEATHER STRIPPING	SWEEP	THRESHOLD	KICKPLATE
1	X	3	X	CLASSROOM	X	X	X	X	X

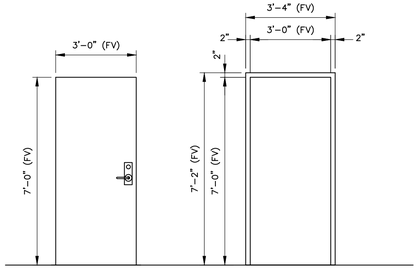

DOOR & FRAME TYPES

DOOR & HARDWARE NOTES:

1. ALL DOORS SHALL BE 1 3/4" THICK, FLUSH DOORS WITH STAINLESS STEEL HARDWARE.
2. ALL DOOR HARDWARE AND ACCESSORIES SHALL MEET ALL APPLICABLE CODE REQUIREMENTS FOR HANDICAP ACCESSIBILITY.
3. ALL EXTERIOR DOORS SHALL BE INSULATED.
4. EXTERIOR DOORS AND PENETRATIONS SHALL HAVE FLASHING AND WEATHER STRIPPING AS SPECIFIED, AND AS RECOMMENDED BY THE DOOR SUPPLIER.
5. THE SPECIFIED DOOR AND HARDWARE SETS SHALL BE FIELD VERIFIED FOR EACH OPENING PRIOR TO SUBMITTAL PREPARATION AND MATERIAL SHIPMENT. CONTRACTOR SHALL BE RESPONSIBLE TO ENSURE THAT ALL DOOR AND HARDWARE COMPONENTS ARE COMPATIBLE WITH EXISTING CONDITIONS.
6. FIELD VERIFY ALL DOOR AND FRAME SIZES WITH EXISTING OPENING DIMENSIONS PRIOR TO FABRICATION. DOOR AND FRAME SIZES SHOWN MAY REQUIRE ADJUSTMENT.
7. PROVIDE ALL HARDWARE DENOTED BY 'X'.
8. ALL DOOR CLOSERS SHALL HAVE INTEGRAL "HOLD-OPEN" FEATURE.
9. ELECTRICAL LOCKSETS ARE NOT REQUIRED.
10. ALL LOCKS SHALL BE KEYED AS SPECIFICALLY DIRECTED BY OWNER.

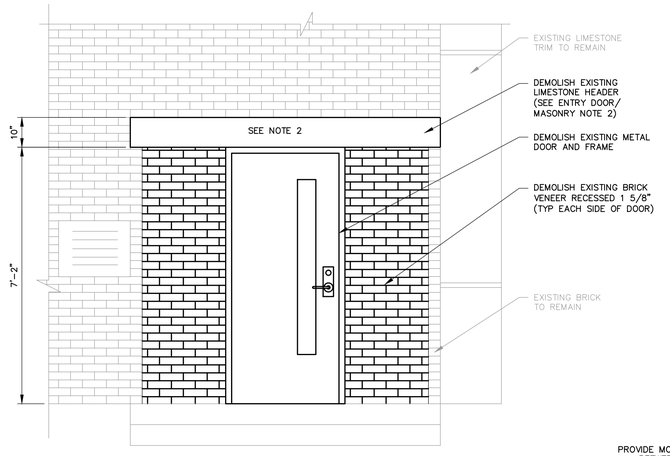

EXISTING ELEVATION

SCALE: 1/2" = 1'-0"

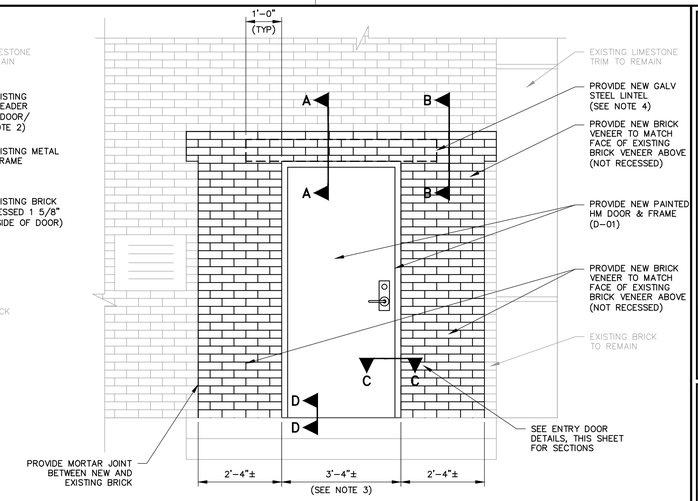

PROPOSED ELEVATION

SCALE: 1/2" = 1'-0"
(PRIOR TO STUCCO APPLICATION)

ENTRY DOOR/MASONRY NOTES:

1. PRIOR TO STUCCO APPLICATION, THE ENTRY AREA SHALL BE RECONSTRUCTED BY MASONRY SUBCONTRACTOR TO DEMOLISH THE EXISTING DAMAGED/DISLODGED LIMESTONE HEADER, DEMOLISH THE RECESSED BRICK VENEER, AND TO REBUILD THIS AREA TO RESULT IN A NEW BRICK VENEER (WITH NEW STEEL ANGLE LINTEL) THAT IS FLUSH WITH THE EXISTING NON-RECESSED BRICK VENEER. ONCE REPAIRS ARE COMPLETE, STUCCO FINISH SHALL BE APPLIED AS SHOWN ON SHEET S-101.
2. SHORING NOTE TO MASONRY SUBCONTRACTOR: DURING DEMOLITION OF LIMESTONE HEADER, MASONRY SUBCONTRACTOR SHALL PROVIDE TEMPORARY SUPPORT TO ALL MASONRY ABOVE ENTRY AREA. TEMPORARY SUPPORT MEASURES SHALL REMAIN IN PLACE UNTIL NEW STEEL LINTEL AND NEW VENEER ARE INSTALLED AND CURED.
3. MASONRY OPENING FOR NEW DOOR: MASONRY SUBCONTRACTOR SHALL COORDINATE WITH STUCCO CONTRACTOR TO LEAVE THE PROPER MASONRY OPENING FOR NEW DOOR, SO AS TO ALLOW FOR THICKNESS OF STUCCO TO RETURN AROUND OPENING CORNERS TO DOOR FRAME. NO BRICK SHALL BE EXPOSED-TO-VIEW WITHIN DOOR OPENING.
4. NEW GALVANIZED STEEL LINTEL SHALL BE FURNISHED BY METALS SUBCONTRACTOR UNDER SPECIFICATION DIVISION 5. LINTEL SHALL BE INSTALLED AND ALL OTHER MASONRY WORK SHALL BE PROVIDED BY MASONRY SUBCONTRACTOR UNDER SPECIFICATION DIVISION 4.

M / S-101 **ENTRANCE DETAIL**

SCALE: VARIES

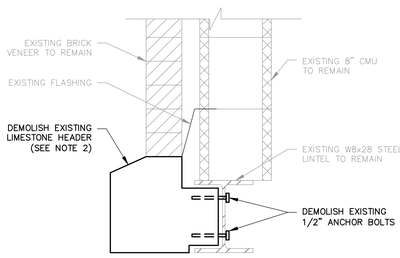

EXISTING SECTION A-A

SCALE: 1 1/2" = 1'-0"

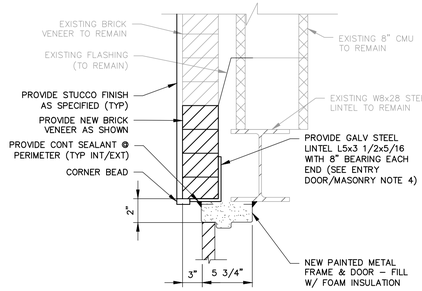

PROPOSED SECTION A-A

SCALE: 1 1/2" = 1'-0"

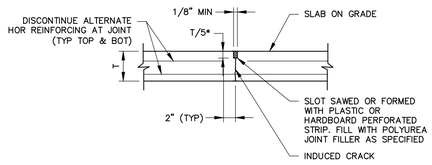

* BUT DO NOT CUT THROUGH TOP LAYER OF REINFORCEMENT

L / S-106 / S-301 **SLAB CONTROL JOINT DETAIL**

SCALE: N.T.S.

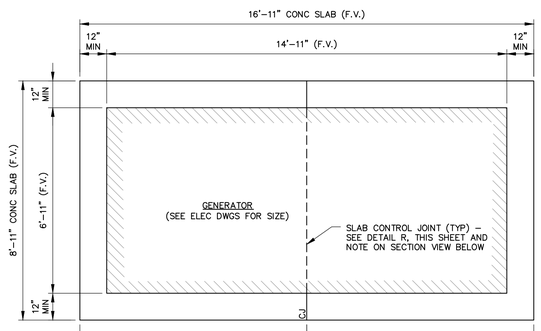

PLAN

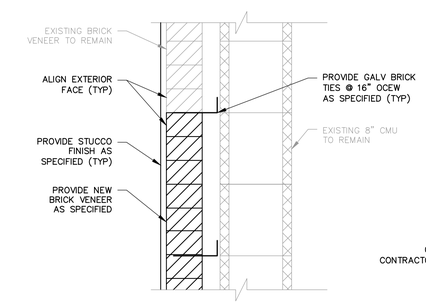

PROPOSED SECTION B-B

SCALE: 1 1/2" = 1'-0"

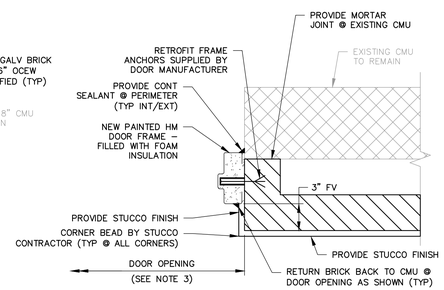

PROPOSED SECTION C-C

SCALE: 1 1/2" = 1'-0"

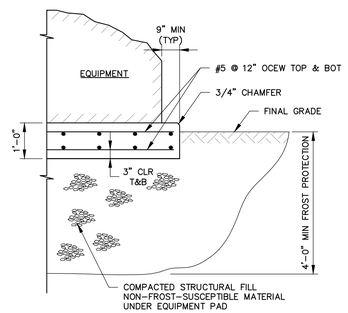

Q / C-302 **EXTERIOR EQUIPMENT PAD DETAIL**

SCALE: N.T.S.

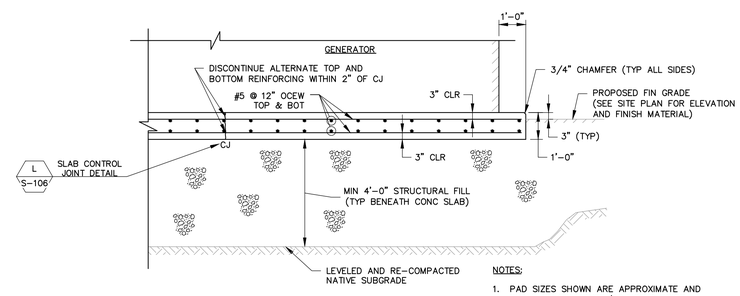

SECTION

NOTES:

1. PAD SIZES SHOWN ARE APPROXIMATE AND SHALL BE CONFIRMED/ADJUSTED PRIOR TO CONSTRUCTION BASED ON APPROVED EQUIPMENT SHOP DRAWINGS OR FIELD VERIFICATION OF EQUIPMENT SIZE.

P / E-301 / C-302 **GENERATOR CONCRETE PAD DETAILS**

SCALE: 3/8" = 1'-0"

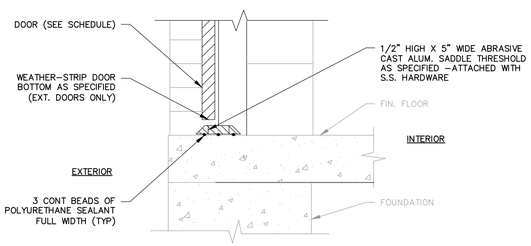

PROPOSED SECTION D-D

SCALE: 1 1/2" = 1'-0"

N / S-101 **ENTRY DOOR DETAILS**

SCALE: VARIES

ISSUE FOR BID

980 Washington Street, Suite 325N
Dedham, Massachusetts 02026
800.446.5518 | www.woodardcurran.com
COMMITMENT & INTEGRITY DRIVE RESULTS
WOODARD & CURRAN

THIS DOCUMENT IS THE PROPERTY OF WOODARD & CURRAN INC., AND ITS CLIENT. REPRODUCTION OR MODIFICATION WITHOUT WRITTEN PERMISSION IS PROHIBITED.

COMMONWEALTH OF MASSACHUSETTS
JAMES P. STUROS
STRUCTURAL
No. 45766
REGISTERED PROFESSIONAL ENGINEER
12-21-15

REV.	DESCRIPTION	DATE
A	FOR MASSDEP REVIEW	3/11/15
B	ISSUE FOR BID	07/18/14

DESIGNED BY: JPS
DRAWN BY: DMB
CHECKED BY: JPS
224802-S-106.DWG

RAW WATER PUMP STATION
SCHEDULES & DETAILS

LOWELL REGIONAL WATER UTILITY
LOWELL, MASSACHUSETTS

WATER SYSTEM IMPROVEMENTS

JOB NO.:224802.20
DATE: MARCH 2015
SCALE: AS NOTED
SHEET: 16 OF 51

S-106

\\wc\shared\Projects\224802 lowell ma - water system improvement pef 2011\wip\Drawings\Structural\224802-S-106.dwg, Mar 02, 2015 - 4:22pm

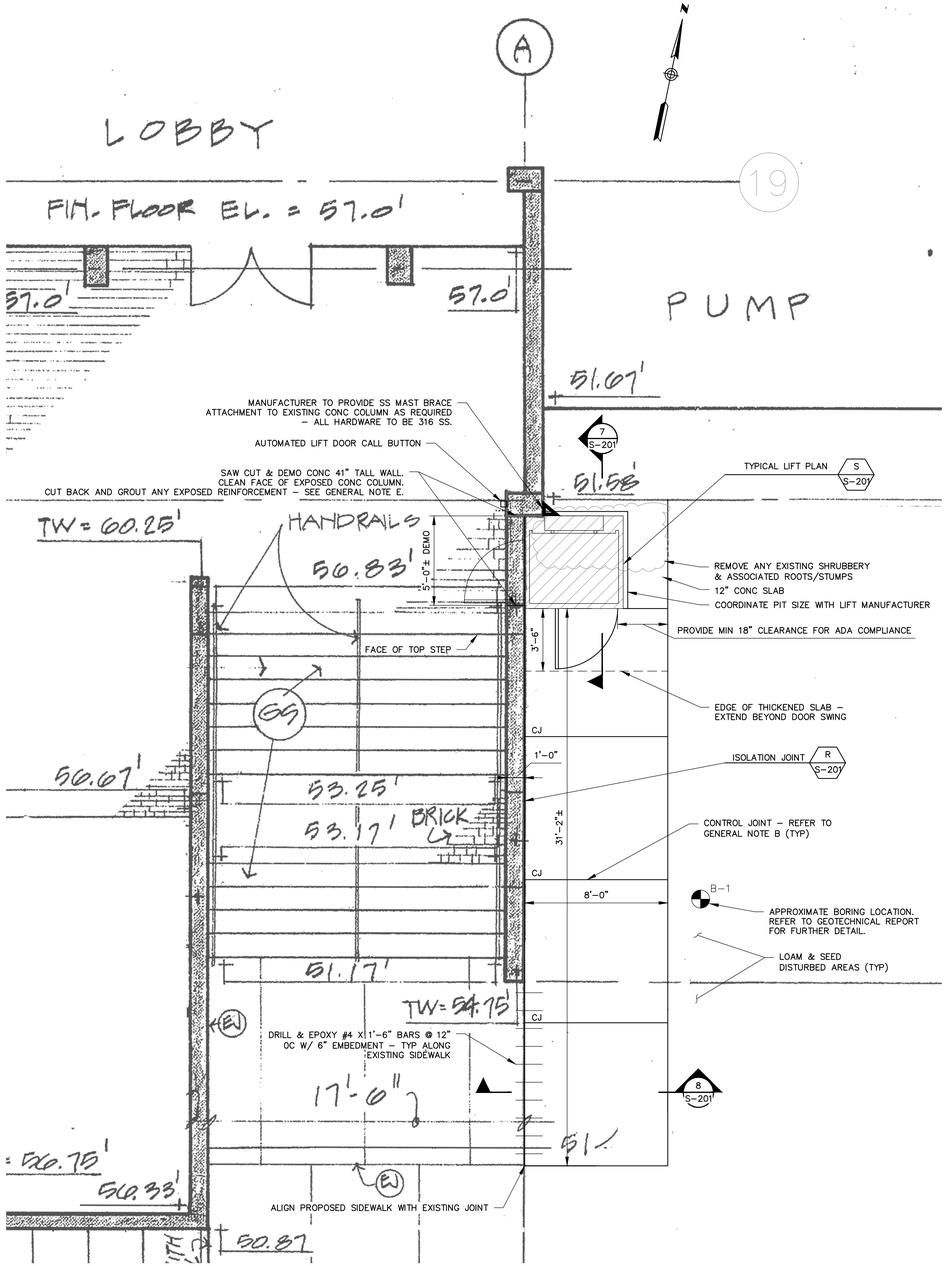

PLAN VIEW
SCALE: 1/4" = 1'-0"

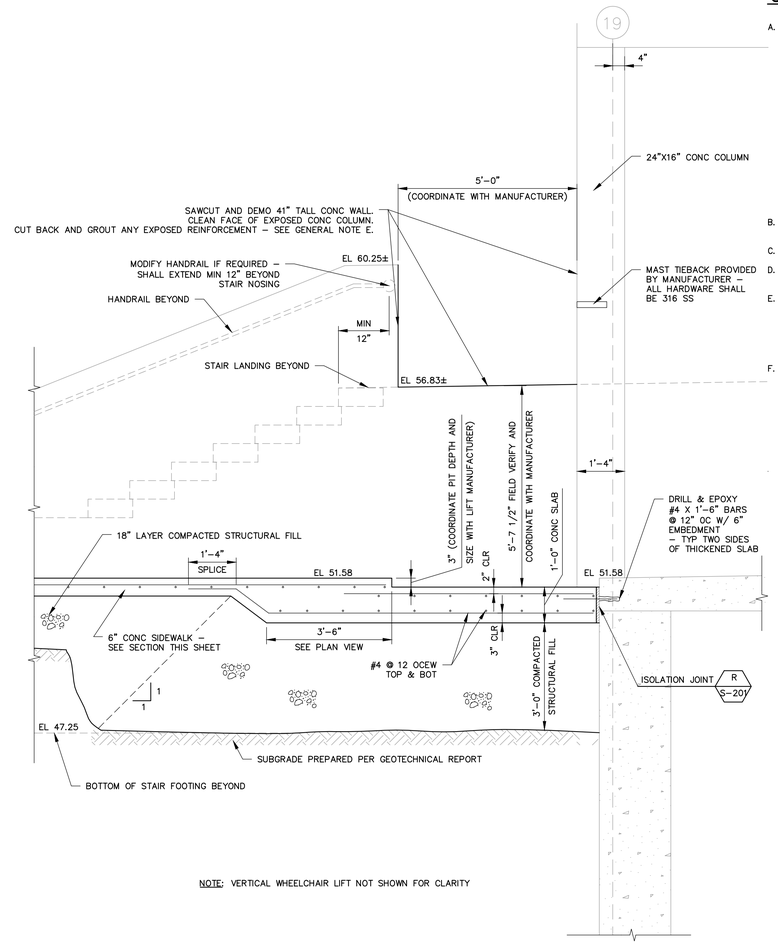

NOTE: VERTICAL WHEELCHAIR LIFT NOT SHOWN FOR CLARITY

VERTICAL WHEELCHAIR LIFT SECTION 7 S-201
SCALE: 1/2" = 1'-0"

GENERAL NOTES

A. EXCAVATION AND SUBGRADE PREPARATION:

1. REFER TO GEOTECHNICAL REPORT TITLED "EXPLORATION AND GEOTECHNICAL ENGINEERING SERVICES PROPOSED ADA RAMP" BY S.W. COLE DATED NOVEMBER 7, 2014 IN SPECIFICATION SECTION 01 15 00 FOR SUBGRADE PREPARATION.
2. PROOF ROLL SUBGRADE A MINIMUM OF 3–5 PASSES WITH A VIBRATORY PLATE COMPACTOR WITH A STATIC WEIGHT OF 600 POUNDS OR GREATER.
3. EXCAVATION TO FINISH SUBGRADE SHALL BE PERFORMED USING A SMOOTH–EDGED BUCKET TO REDUCE THE POTENTIAL FOR DISTURBANCE OF THE SUBGRADE SOILS.
4. COMPACT STRUCTURAL FILL PLACED IN MAXIMUM 12" LIFTS AND TO A MINIMUM 95% OF ITS MAXIMUM DRY DENSITY DETERMINED BY ASTM D1557. STRUCTURAL FILL GRADATION SHALL COMPLY WITH SPECIFICATION SECTION 31 00 00.
5. COMPACT CRUSHED STONE IN LOOSE LIFTS NOT EXCEEDING 12" WITH 2–3 PASSES OF A VIBRATORY PLATE COMPACTOR WITH A STATIC WEIGHT OF AT LEAST 600 POUNDS. CRUSHED STONE GRADATION SHALL COMPLY WITH SPECIFICATION SECTION 31 00 00.

B. CONCRETE SIDEWALK: PROVIDE TOOLED EDGES AND JOINTS SIMILAR IN APPEARANCE TO EXISTING CONCRETE SIDEWALK.

C. SEALANT: PROVIDE POLYURETHANE SEALANT COMPLYING WITH ASTM C 920, TYPE M, GRADE P, USE T.

D. VERTICAL WHEELCHAIR LIFT: SHALL CONFORM TO SPECIFICATION SECTION 14 42 00. CONTRACTOR TO COORDINATE ALL ELEVATIONS AND PLAN DIMENSIONS WITH MANUFACTURER.

E. WALL OPENINGS: SAW–CUT OPENING USING TOOLS THAT RESULT IN CLEAN, SQUARE CORNERS – NO OVER–CUTS ARE PERMITTED BEYOND FINISHED OPENING DIMENSIONS. ANY SPALLING SHALL BE PATCHED. TOP EXPOSED EDGES ACROSS WALL THICKNESS SHALL HAVE CHAMFERS EITHER BY SAW–CUTTING OR GRINDING. ANY CUT/EXPOSED REBAR SHALL BE REPAIRED AS FOLLOWS: CORE A 2" DIAMETER X 2" DEEP HOLE CENTERED ON REBAR; CHIP OUT ALL CONCRETE WITHIN CORE TO 2" DEPTH; BURN OR CUT BACK REBAR TO 2" DEPTH; PLUG 2" DIAMETER VOID WITH GROUT.

F. GRADING AND SITE LAYOUT INFORMATION FROM RECORD DRAWING TITLED W.T.P. EXPANSION – MAIN SITE; ADD ALTERNATE NO. 2 – SITE LAYOUT PLAN, BY WHITMAN & HOWARD, INC., DATED JULY 1976.

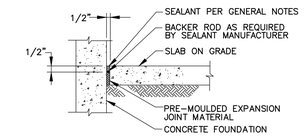

R S-201 ISOLATION JOINT
N.T.S.

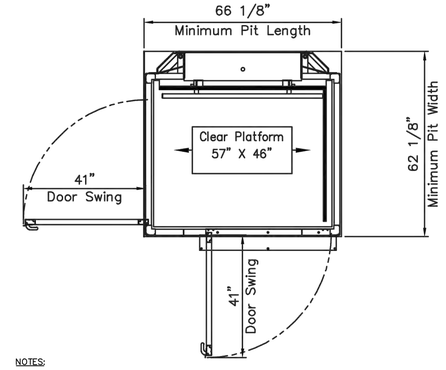

NOTES:

1. VERTICAL WHEELCHAIR LIFT AND ENCLOSURE PROVIDED BY LIFT MANUFACTURER PER SPECIFICATION SECTION 14 42 00.
2. SEE ELECTRICAL DRAWINGS AND SPECIFICATION SECTION 14 42 00 FOR POWER REQUIREMENTS.

S S-201 TYPICAL LIFT PLAN
SCALE: 1/2" = 1'-0"

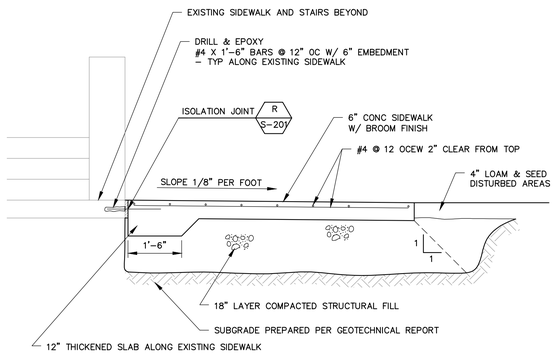

CONCRETE SIDEWALK 8 S-201
SCALE: 1/2" = 1'-0"

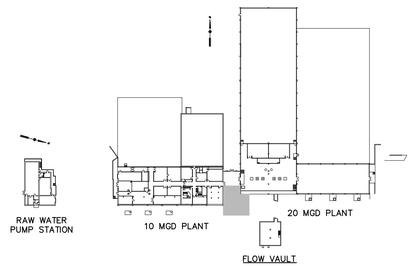

KEY PLAN
N.T.S.

BAR SCALE
1/4" = 1'-0"
CHECK GRAPHIC SCALE BEFORE USING

BAR SCALE
1/2" = 1'-0"
CHECK GRAPHIC SCALE BEFORE USING

ISSUE FOR BID

980 Washington Street, Suite 325N
Dedham, Massachusetts 02026
800.446.5518 | www.woodardcurran.com
COMMITMENT & INTEGRITY DRIVE RESULTS
WOODARD & CURRAN

THIS DOCUMENT IS THE PROPERTY OF WOODARD & CURRAN INC., AND ITS CLIENT. REPRODUCTION OR MODIFICATION WITHOUT WRITTEN PERMISSION IS PROHIBITED.

COMMONWEALTH OF MASSACHUSETTS
JAMES P. STUROS
STRUCTURAL
No. 44,767
REGISTERED PROFESSIONAL ENGINEER
12-27-15

REV.	DESCRIPTION	DATE
A	ISSUE FOR BID	3/11/15
B	FOR MASSDEP REVIEW	07/18/14

DESIGNED BY: SJT
DRAWN BY: SJT
CHECKED BY: JPS
224802-S-201.DWG

VERTICAL WHEELCHAIR LIFT PLANS AND SECTIONS (SRF INELIGIBLE)

LOWELL REGIONAL WATER UTILITY
LOWELL, MASSACHUSETTS

WATER SYSTEM IMPROVEMENTS

JOB NO.: 224802.20
DATE: MARCH 2015
SCALE: AS NOTED
SHEET: 17 OF 51

S-201

\\wc\shared\Projects\224802 lowell ma - water system improvement pef 2011\wip\Drawings\Structural\224802-S-201.dwg, Mar 02, 2015 - 4:23pm

24x36 SHEET
1:1

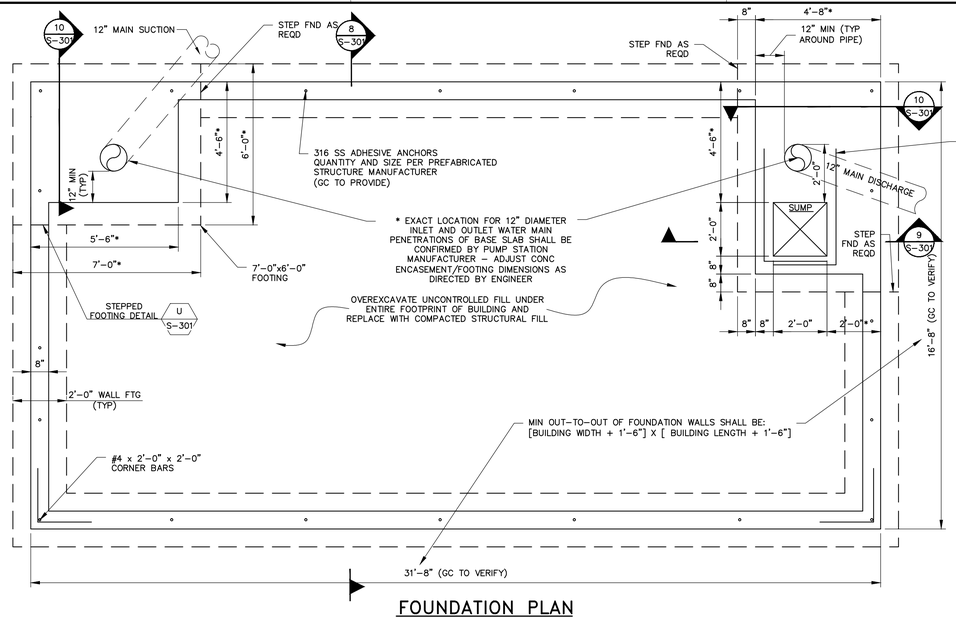

FOUNDATION PLAN
SCALE: 3/8" = 1'-0"

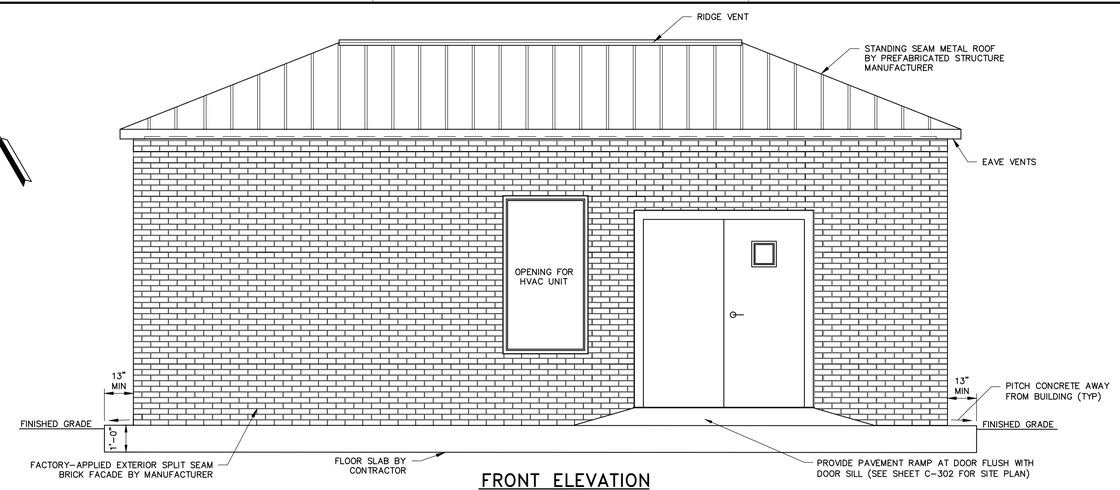

FRONT ELEVATION
SCALE: 3/8" = 1'-0"

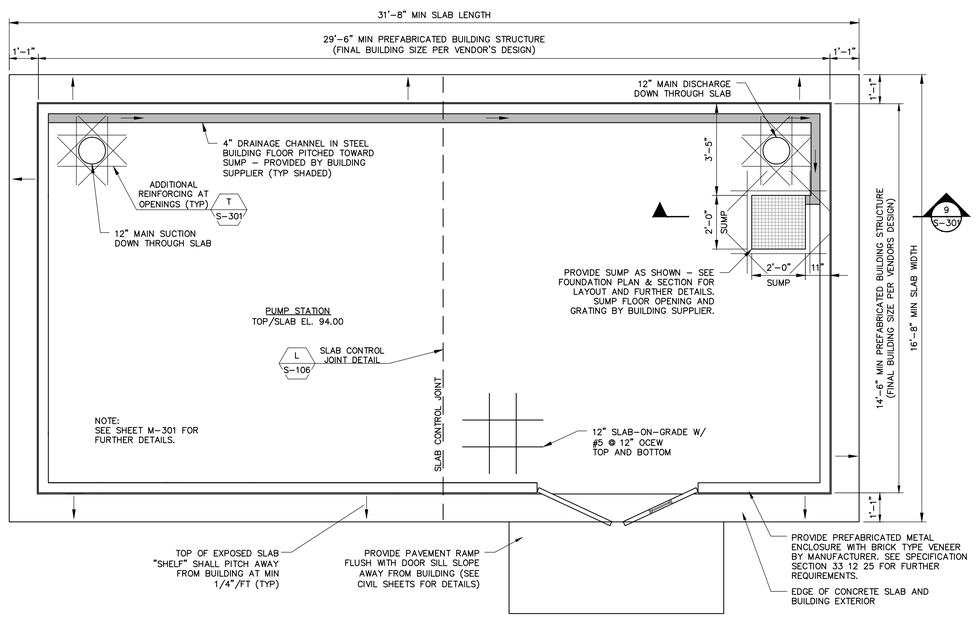

FLOOR PLAN
SCALE: 3/8" = 1'-0"

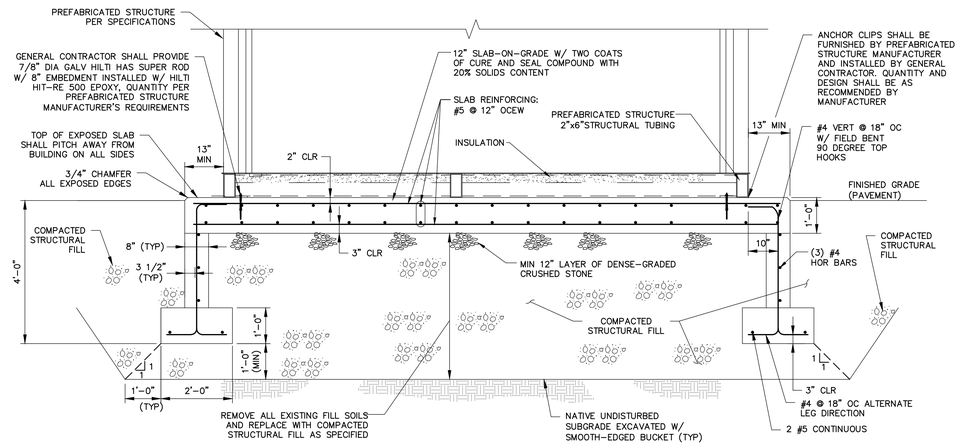

SECTION 8/S-301
SCALE: 1/2" = 1'-0"

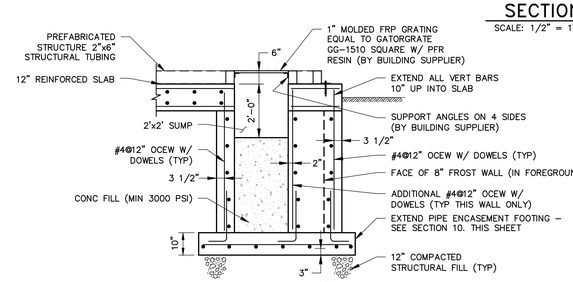

SECTION 9/S-301
SCALE: 3/8" = 1'-0"

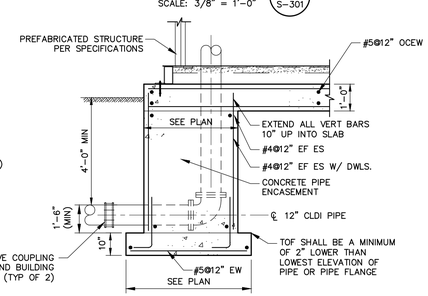

SECTION 10/S-301
SCALE: 3/8" = 1'-0"

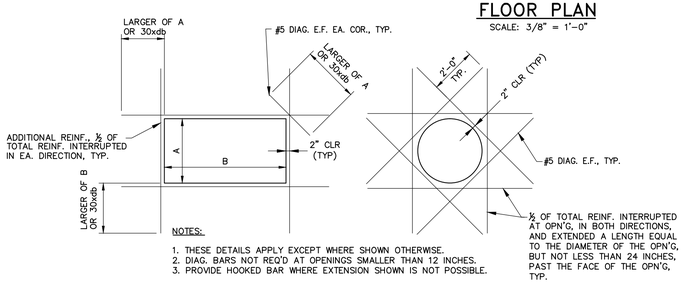

NOTES:
1. THESE DETAILS APPLY EXCEPT WHERE SHOWN OTHERWISE.
2. DIAG. BARS NOT REQ'D AT OPENINGS SMALLER THAN 12 INCHES.
3. PROVIDE HOOKED BAR WHERE EXTENSION SHOWN IS NOT POSSIBLE.

ADDITIONAL REINFORCING AT OPENINGS (T/S-301)
SCALE: N.T.S.

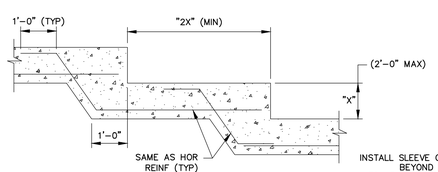

STEPPED FOOTING DETAIL (U/S-301)
SCALE: N.T.S.

GENERAL NOTES:

A. FOUNDATIONS:

1. REFER TO GEOTECHNICAL REPORT PREPARED BY S.W. COLE ENGINEERING, INC, DATED NOVEMBER 14, 2013, FOR GEOTECHNICAL RECOMMENDATIONS IN SPECIFICATION SECTION 01 15 00.
2. ALL WALL AND BUILDING FOOTINGS SHALL BEAR ON A 12" MINIMUM LAYER OF COMPACTED STRUCTURAL FILL AT A MINIMUM DEPTH OF 4' BELOW ADJACENT FINISH EXTERIOR GRADE.
3. PROVIDE CONTROL OF SURFACE AND SUBSURFACE WATER AS REQUIRED TO INSURE THAT ALL FOUNDATION WORK IS DONE IN THE DRY.
4. NO FOUNDATION SHALL BE PLACED ON FROZEN SUBGRADE. PROTECT IN-PLACE FOUNDATIONS AND SLAB-ON-GRADE FROM FROST PENETRATION UNTIL THE PROJECT IS COMPLETE.
5. EXISTING UNCONTROLLED FILL SOILS SHALL BE OVER-EXCAVATED BELOW THE ENTIRE FOOTPRINT OF THE BUILDING AND REPLACED WITH COMPACTED STRUCTURAL FILL. CONTRACTOR SHALL ASSUME FILL SOILS EXTEND BELOW THE BOTTOM OF THE WALL FOOTINGS A DEPTH OF 2 FEET. FOOTING ELEVATIONS SHOWN ON THE DRAWINGS REPRESENT ESTIMATED DEPTHS AND ARE NOT TO BE CONSTRUED AS LIMITING THE AMOUNT OF EXCAVATION REQUIRED TO REACH SUITABLE BEARING MATERIAL.
6. SAND/SILT SUBGRADE WILL UNDERGO SUBSTANTIAL STRENGTH LOSS WHEN SUBJECT TO CONSTRUCTION TRAFFIC AND PERIODS OF PERCIPITATION. SOILS THAT BECOME YIELDING OR DIFFICULT TO WORK SHALL BE REMOVED AND REPLACED WITH COMPACTED STRUCTURAL FILL.
7. FOUNDATIONS AND SLAB-ON-GRADE HAVE BEEN DESIGNED FOR A 55,000 LBS UNFACTORED PREFABRICATED BUILDING STRUCTURE. NOTIFY ENGINEER, IN WRITING, IF WEIGHT OF PREFABRICATED BUILDING IS MORE THAN 55,000 LBS. CONTRACTOR SHALL BE RESPONSIBLE FOR THE FOUNDATION REDESIGN AND ANY ASSOCIATED CONSTRUCTION/DESIGN COSTS IF THE SELECTED BUILDING EXCEEDS THE SPECIFIED DESIGN WEIGHT OF 55,000 LBS.

B. CONCRETE:

1. CONCRETE WORK, STEEL REINFORCING BARS, AND CONCRETE MIX DESIGN SHALL BE IN ACCORDANCE WITH DIVISION 3 OF THE SPECIFICATIONS.
2. CONCRETE SHALL HAVE A MINIMUM 28-DAY COMPRESSIVE STRENGTH OF 4,000 PSI.
3. DETAILING, FABRICATION AND ERECTION OF REINFORCING STEEL SHALL BE DONE IN ACCORDANCE WITH LATEST EDITION OF ACI 315 "DETAILS AND DETAILING OF CONCRETE REINFORCEMENT".

BAR SCALE
3/8" = 1'-0"
CHECK GRAPHIC SCALE BEFORE USING

ISSUE FOR BID

980 Washington Street, Suite 325N
Dedham, Massachusetts 02026
800.446.5518 | www.woodardcurran.com
COMMITMENT & INTEGRITY DRIVE RESULTS
WOODARD & CURRAN

THIS DOCUMENT IS THE PROPERTY OF WOODARD & CURRAN INC., AND ITS CLIENT. REPRODUCTION OR MODIFICATION WITHOUT WRITTEN PERMISSION IS PROHIBITED.

COMMONWEALTH OF MASSACHUSETTS
JAMES P. STUROS
STRUCTURAL
No. 45,767
REGISTERED PROFESSIONAL ENGINEER
2-27-15

REV.	DESCRIPTION	DATE
B	ISSUE FOR BID	3/11/15
A	FOR MASSDEP REVIEW	07/18/14

DESIGNED BY: JPS
DRAWN BY: DMB
CHECKED BY: JPS
224802-S-301.DWG

STACKPOLE STREET PUMP STATION
PLAN, ELEVATION, SECTIONS, & DETAILS

LOWELL REGIONAL WATER UTILITY
LOWELL, MASSACHUSETTS

WATER SYSTEM IMPROVEMENTS

JOB NO.: 224802.20
DATE: MARCH 2015
SCALE: AS NOTED
SHEET: 18 OF 51

S-301

\\wc\shared\Projects\224802 lowell ma – water system improvement pef 2011\wip\Drawings\Structural\224802-S-301.dwg, Mar 02, 2015 – 4:23pm

24x36 SHEET
1:1.00003

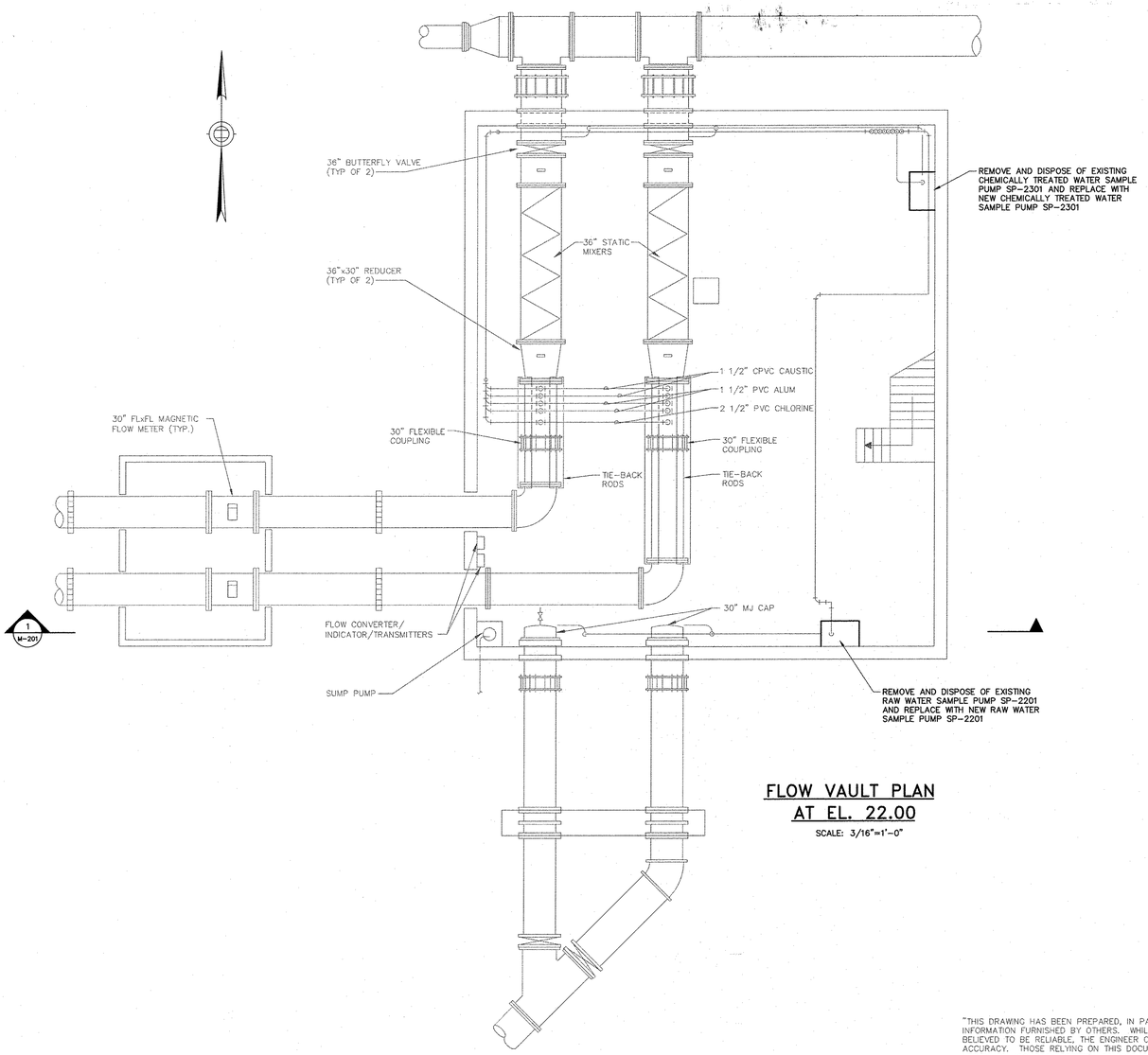

FLOW VAULT PLAN AT EL. 22.00

SCALE: 3/16"=1'-0"

NOTES:

1. WORK REQUIRING SHUTDOWN OF RAW AND FINISHED WATER MAINS SHALL BE PERFORMED BETWEEN THE HOURS OF 8:00 PM AND 4:00 AM.
2. OBTAIN WRITTEN APPROVAL FROM ENGINEER FOR ALL SHUTDOWNS.
3. CONTRACTOR SHALL PROVIDE ALL FITTINGS AND PIPING REQUIRED TO CONNECT NEW SAMPLE PUMPS WITH EXISTING SUCTION AND DISCHARGE LINES AS SHOWN.
4. SEE SHEET M-501 FOR SAMPLE PUMP AND TURBIDIMETER DETAILS

"THIS DRAWING HAS BEEN PREPARED, IN PART, BASED UPON INFORMATION FURNISHED BY OTHERS. WHILE THE INFORMATION IS BELIEVED TO BE RELIABLE, THE ENGINEER CANNOT ASSURE ITS ACCURACY. THOSE RELYING ON THIS DOCUMENT ARE ADVISED TO VERIFY ITS ACCURACY BEFORE APPLYING IT FOR ANY PURPOSE."

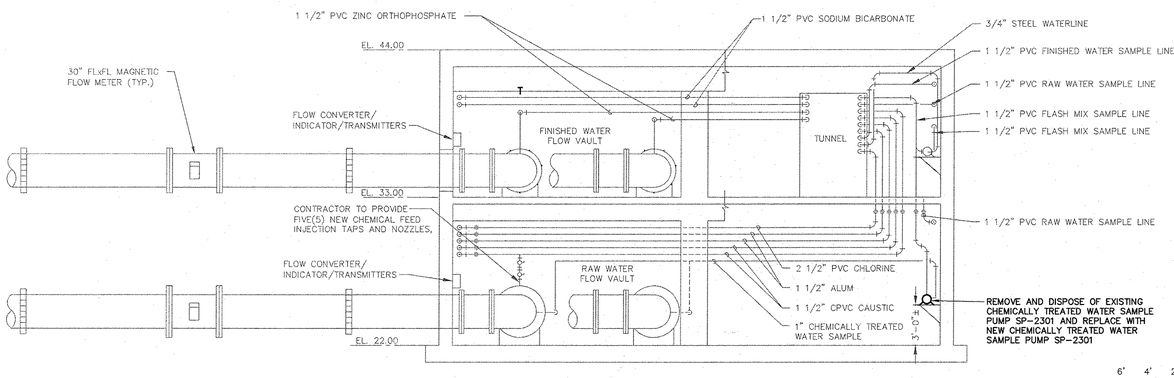

SECTION 1/M-201

SCALE: 3/16"=1'-0"

6' 4' 2' 0 4' 8'

BAR SCALE
3/16" = 1'-0"
CHECK GRAPHIC SCALE BEFORE USING

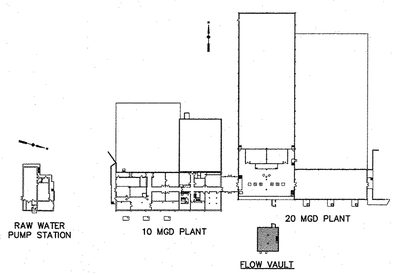

KEY PLAN

N.T.S.

ISSUE FOR BID

980 Washington Street, Suite 325N
Dedham, Massachusetts 02026
800.446.5516 | www.woodardcurran.com

COMMITMENT & INTEGRITY DRIVE RESULTS

THIS DOCUMENT IS THE PROPERTY OF WOODARD & CURRAN INC. AND THE CLIENT. REPRODUCTION OR TRANSFER TO THIRD PARTIES IN PROHIBITED WITHOUT WRITTEN PERMISSION.

REV	DESCRIPTION	DATE
A	FOR MASSDEP REVIEW	07/16/14
B	ISSUE FOR BID	3/11/15

DESIGNED BY: BCC | CHECKED BY: BCC
DRAWN BY: JAR | 224802-M-201.DWG

RAW & FINISH WATER FLOW VAULT MODIFICATIONS

LOWELL REGIONAL WATER UTILITY
LOWELL, MASSACHUSETTS

WATER SYSTEM IMPROVEMENTS

JOB NO.:224802.20
DATE: MARCH 2015
SCALE: AS NOTED
SHEET: 19 OF 51

M-201

\\wc\shared\Projects\224802 Lowell MA - Water System Improvement PEF 2011\wip\Drawings\Mechanical\224802-M-201.dwg, Mar 02, 2015 - 6:50am

24x36 SHEET
1:1.00003

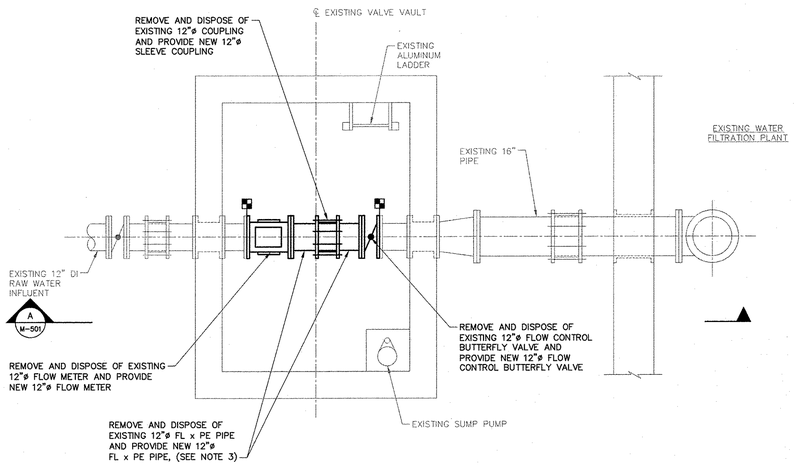

PLAN
EXISTING FLOW CONTROL VAULT (10MGD)
(TYPICAL OF 3)

SCALE: 3/8" = 1'-0"

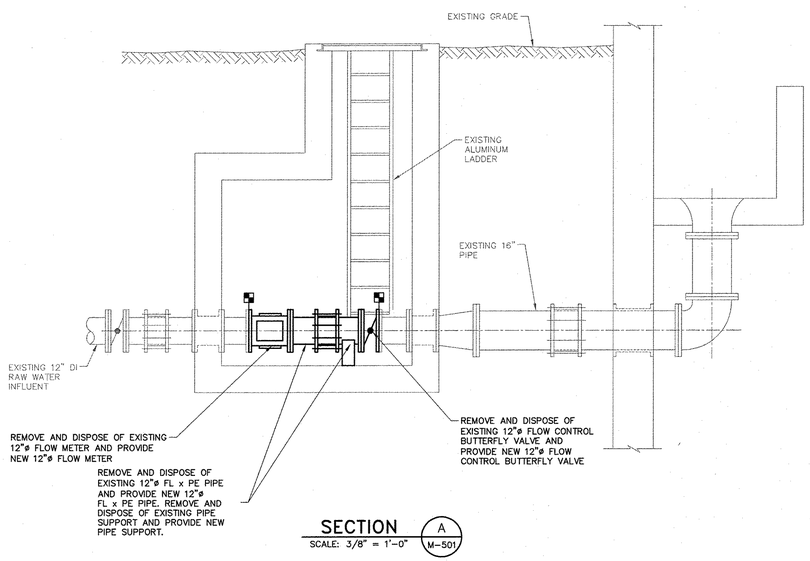

SECTION A M-501

SCALE: 3/8" = 1'-0"

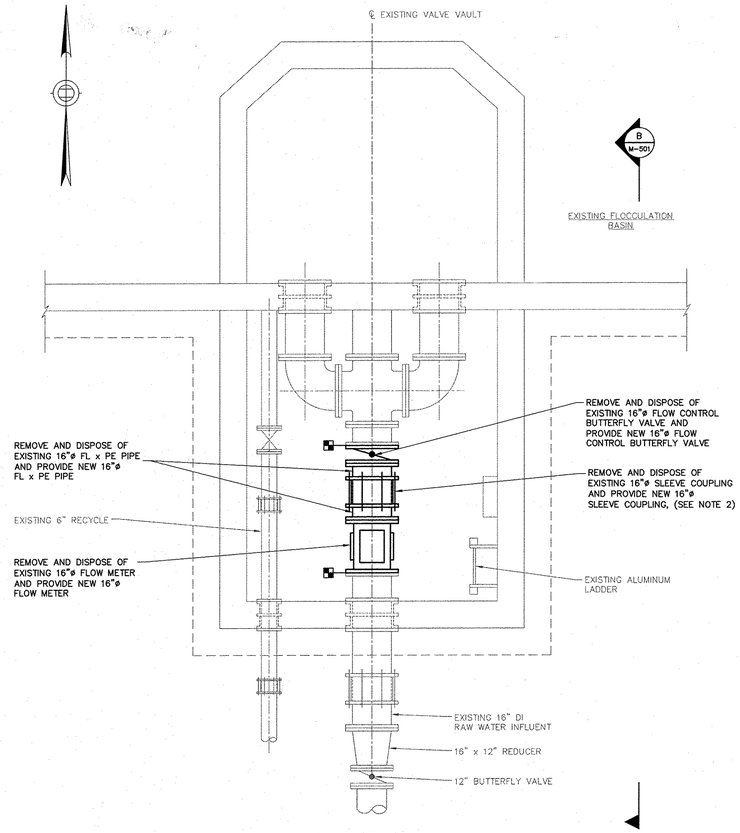

PLAN
EXISTING FLOW CONTROL VAULT (20MGD)
(TYPICAL OF 3)

SCALE: 3/8" = 1'-0"

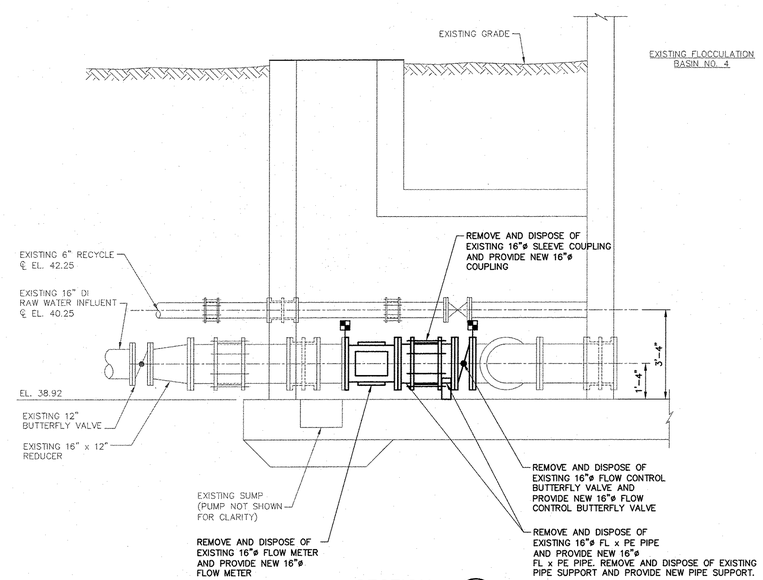

SECTION B M-501

SCALE: 3/8" = 1'-0"

NOTES:

1. WORK REQUIRING SHUTDOWN OF THE RAW WATER INFLUENT MAINS SHALL BE PERFORMED BETWEEN THE HOURS OF 8:00 PM AND 4:00 AM.
2. OBTAIN WRITTEN APPROVAL FROM ENGINEER FOR ALL SHUTDOWNS.
3. CONTRACTOR SHALL VERIFY EXACT FLANGE TO FLANGE DIMENSION OF ALL FITTINGS AND NEW EQUIPMENT PRIOR TO ORDERING TO ENSURE PROPER FIT UPON INSTALLATION.
4. CONTRACTOR SHALL VERIFY ALL FLANGE THICKNESSES AND BOLT HOLE PATTERNS PRIOR TO ORDERING NEW EQUIPMENT.
5. CITY WILL OPERATE ALL VALVES NECESSARY TO ASSIST CONTRACTOR WITH THE SHUTDOWN OF EXISTING WATER MAINS.
6. ONLY ONE RAW WATER LINE MAY BE TAKEN OUT OF SERVICE AT ANY TIME UNLESS SPECIFIC WRITTEN PERMISSION IS RECEIVED FROM THE LOWELL REGIONAL WATER UTILITY.
7. CONTRACTOR SHALL BE AWARE THAT SOME FLOW IS EXPECTED TO OCCUR DURING PIPE SHUTDOWNS. WATER SHALL BE DIRECTED TO SUMP. CONTRACTOR SHALL PROVIDE ADDITIONAL PUMPS AS REQUIRED TO HANDLE FLOW. PUMP DISCHARGE SHALL BE DIRECTED TO YARD OR PARKING LOT AS DIRECTED BY THE ENGINEER OR OWNER.
8. ONLY ONE FLOW CONTROL VAULT MAY BE TAKEN OUT OF SERVICE AT ANY TIME. COORDINATE THESE EVENTS WITH OWNER AND ENGINEER AT LEAST ONE WEEK PRIOR TO WORK.
9. SLEEVE COUPLINGS IN RAW WATER FLOW CONTROL VAULTS ARE NOT RESTRAINED.

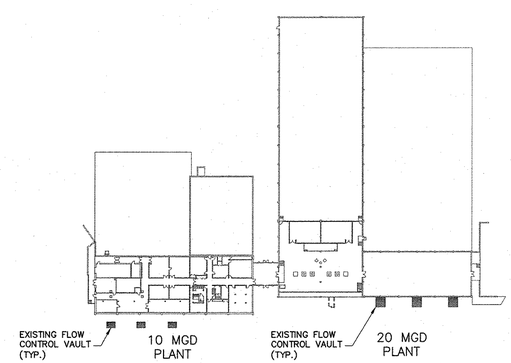

KEY PLAN
NTS

4' 3' 2' 1' 0 3' 6'

BAR SCALE
3/8" = 1'-0"
CHECK GRAPHIC SCALE BEFORE USING

ISSUE FOR BID

980 Washington Street, Suite 325N
Dedham, Massachusetts 02026
800.446.5518 | www.woodardcurran.com
WOODARD & CURRAN
COMMITMENT & INTEGRITY DRIVE RESULTS

THIS DOCUMENT IS THE PROPERTY OF WOODARD & CURRAN INC. AND TO CLIENT. REPRODUCTION OR MODIFICATION WITHOUT WRITTEN PERMISSION IS PROHIBITED.

REV	DESCRIPTION	DATE
A	FOR MASSDEP REVIEW	3/11/15
B	ISSUE FOR BID	07/18/14

DESIGNED BY: BCC | CHECKED BY: BCC
DRAWN BY: JAR | 224802-M-202.DWG

RAW WATER FLOW CONTROL VAULTS MODIFICATIONS

LOWELL REGIONAL WATER UTILITY
LOWELL, MASSACHUSETTS

WATER SYSTEM IMPROVEMENTS

JOB NO.:224802.20
DATE: MARCH 2015
SCALE: AS NOTED
SHEET: 20 OF 51

M-202

\\wc\shared\Projects\224802 Lowell MA - Water System Improvement PEF 2011\wip\Drawings\Mechanical\224802-M-202.dwg, Mar 02, 2015 - 6:50am

24x36 SHEET
1:1.00003

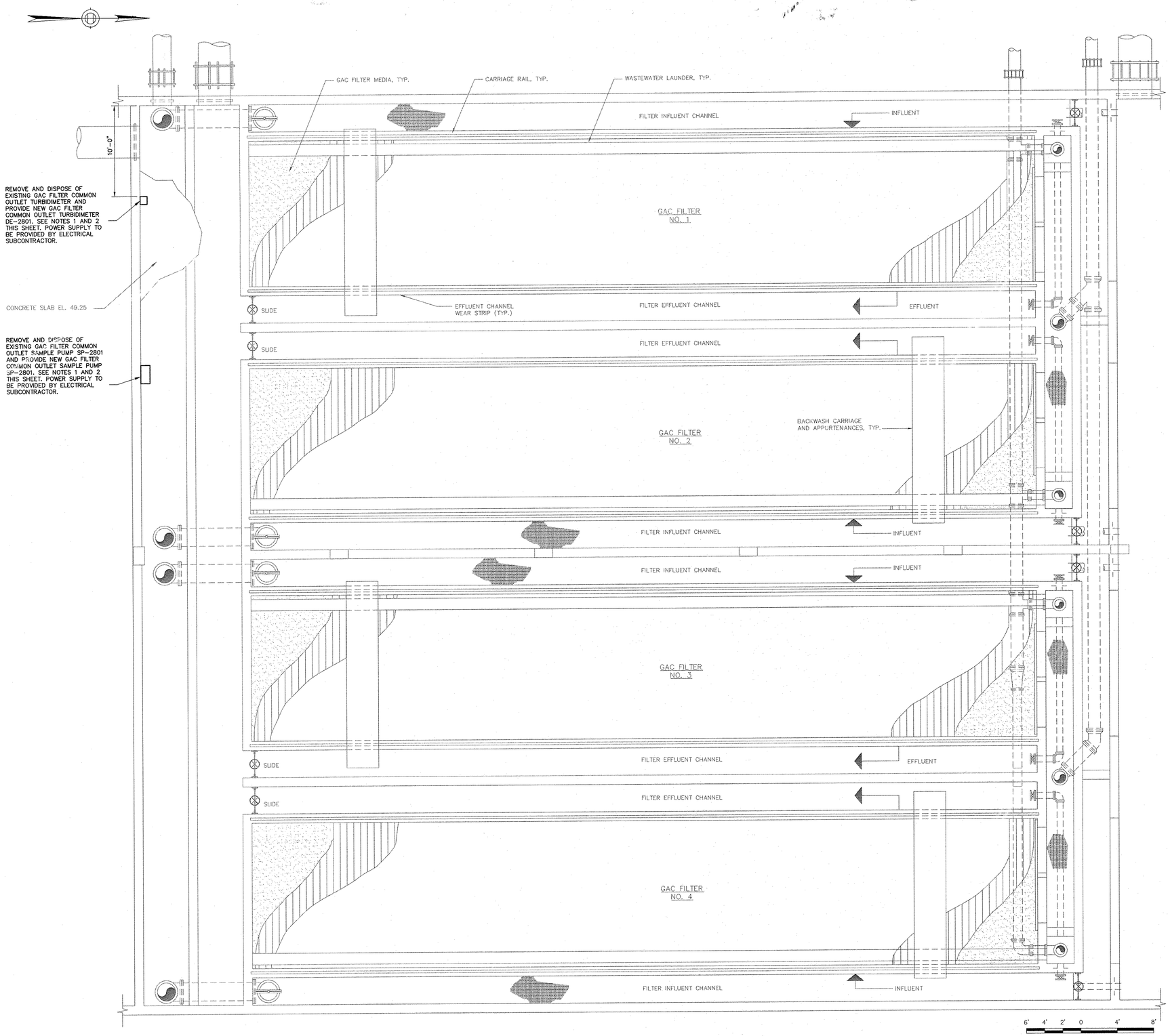

NOTES:

1. CONNECT SAMPLE PUMP SUCTION TO EXISTING SUCTION PIPING. CONNECT SAMPLE PUMP DISCHARGE TO EXISTING SAMPLE PIPE TO LAVORATORY.
2. MOUNT TURBIDIMETER BODY ON WALL ABOVE PUMP. PIPE DRAIN TO CHANNEL BELOW UNIT. SEAL HOLE IN CONCRETE FLOOR AROUND DRAIN PIPE. ELECTRICAL SUBCONTRACTOR TO MOUNT POWER SUPPLY ON WALL ABOVE PUMP AND MAKE ALL POWER AND SIGNAL CONNECTIONS. THE INSTRUMENTATION SUBCONTRACTOR SHALL CONNECT SIGNAL FROM TURBIDIMETER TO CONTROL UNIT MOUNTED ON PANEL NEAR SAMPLE PUMP SP-2502.
3. CONTRACTOR SHALL PROVIDE ALL NEW REQUIRED FITTINGS AND PIPING TO CONNECT THE NEW SAMPLE PUMP TO EXISTING SUCTION AND DISCHARGE PIPING AS SHOWN.
4. SEE SHEET M-501 FOR SAMPLE PUMP AND TURBIDIMETER DETAILS.

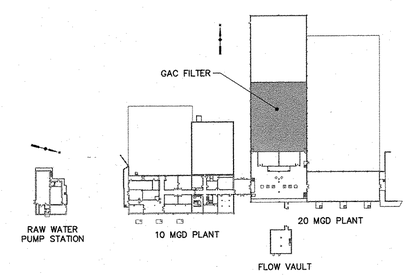

KEY PLAN
N.T.S.

ISSUE FOR BID

980 Washington Street, Suite 325N
Dedham, Massachusetts 02026
800.446.3516 | www.woodardcurran.com
WOODARD & CURRAN
COMMITMENT & INTEGRITY DRIVE RESULTS

THIS DOCUMENT IS THE PROPERTY OF WOODARD & CURRAN INC., AND ITS CLIENT. REPRODUCTION OR MODIFICATION WITHOUT WRITTEN PERMISSION IS PROHIBITED.

REV	DESCRIPTION	DATE
B	ISSUE FOR BID	3/11/15
A	FOR MASSDEP REVIEW	07/18/14

DESIGNED BY: BCC
DRAWN BY: JAR
CHECKED BY: BCC
224802-M-203.DWG

GAC FILTER ROOM MODIFICATIONS

LOWELL REGIONAL WATER UTILITY
LOWELL, MASSACHUSETTS

WATER SYSTEM IMPROVEMENTS

JOB NO.: 224802.20
DATE: MARCH 2015
SCALE: AS NOTED
SHEET: 21 OF 51

M-203

\\wc\shared\Projects\224802 Lowell MA - Water System Improvement PEF 2011\wip\Drawings\Mechanical\224802-M-203.dwg, Mar 02, 2015 - 6:50am

24x36 SHEET
1:1.00003

NOTES:

1. EXISTING TURBIDIMETERS SHALL REMAIN IN SERVICE AND NOT TO BE REMOVED UNTIL THE NEW TURBIDIMETERS ARE INSTALLED AND OPERATIONAL.
2. CONTRACTOR SHALL PROVIDE ALL NEW REQUIRED FITTINGS AND PIPING TO CONNECT THE NEW SAMPLE PUMP TO THE EXISTING SUCTION AND DISCHARGE PIPING.
3. SAMPLE PUMP DISCHARGE PIPING SHALL BE EXTENDED TO THE NEW TURBIDIMETER LOCATIONS.
4. SEE SHEET M-501 FOR SAMPLE PUMP AND TURBIDIMETER DETAILS.

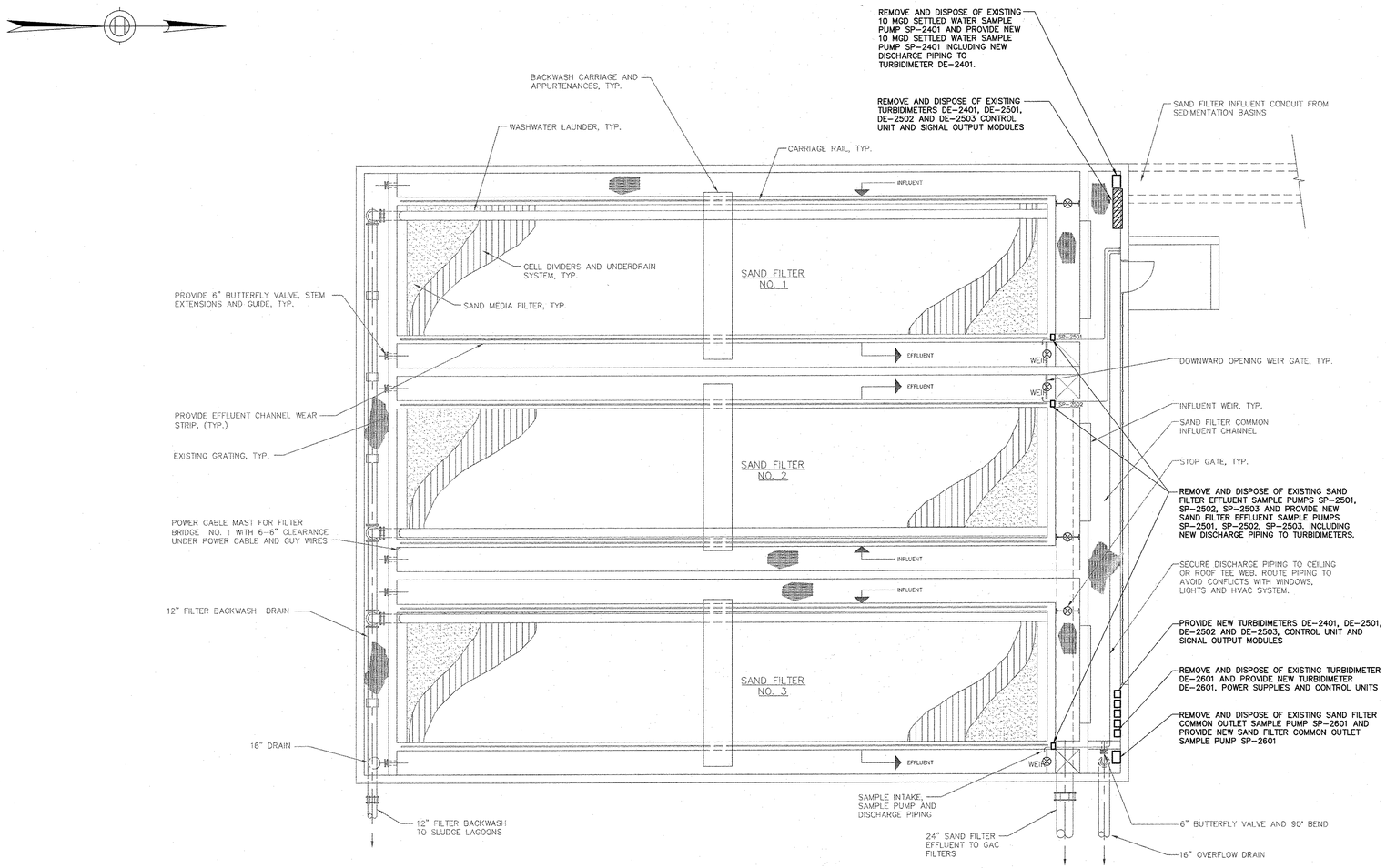

SAND MEDIA FILTER PLAN (10 MGD)

SCALE: 1/8" = 1'-0"

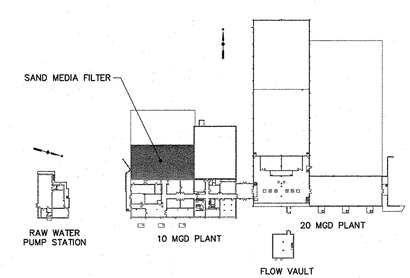

KEY PLAN

N.T.S.

12' 8' 4' 0 8' 16'

BAR SCALE
1/8" = 1'-0"
CHECK GRAPHIC SCALE BEFORE USING

ISSUE FOR BID

980 Washington Street, Suite 325N
Dedham, Massachusetts 02026
800.446.5518 | www.woodardcurran.com
WOODARD & CURRAN

COMMITMENT & INTEGRITY DRIVE RESULTS

THIS DOCUMENT IS THE PROPERTY OF WOODARD & CURRAN INC. AND ITS CLIENT. REPRODUCTION OR MODIFICATION WITHOUT WRITTEN PERMISSION IS PROHIBITED.

REV	DESCRIPTION	DATE
B	ISSUE FOR BID	3/11/15
A	FOR MASSDEP REVIEW	07/18/14

DESIGNED BY: BCC CHECKED BY: BCC
DRAWN BY: JAR 224802-M-204.DWG

SAND MEDIA FILTER ROOM MODIFICATIONS

LOWELL REGIONAL WATER UTILITY
LOWELL, MASSACHUSETTS

WATER SYSTEM IMPROVEMENTS

JOB NO.:224802.20
DATE:MARCH 2015
SCALE: AS NOTED
SHEET: 22 OF 51

M-204

\\wc\shares\Projects\224802 Lowell MA - Water System Improvement PEF 2011\wip\Drawings\Mechanical\224802-M-204.dwg, Mar 02, 2015 - 6:50am

24x36 SHEET
1:1.00003

NOTES:

1. EXISTING TURBIDITMETERS SHALL REMAIN IN SERVICE AND NOT BE REMOVED UNTIL THE NEW TURBIDITMETERS ARE INSTALLED AND OPERATIONAL.
2. CONTRACTOR SHALL PROVIDE ALL NEW REQUIRED FITTINGS AND PIPING TO CONNECT THE NEW SAMPLE PUMP TO EXISTING SUCTION AND DISCHARGE PIPING.
3. SAMPLE PUMP DISCHARGE PIPING SHALL BE EXTENDED TO THE NEW TURBIDITMETER LOCATIONS.
4. SEE SHEET M-501 FOR SAMPLE PUMP AND TURBIDIMETER DETAILS.

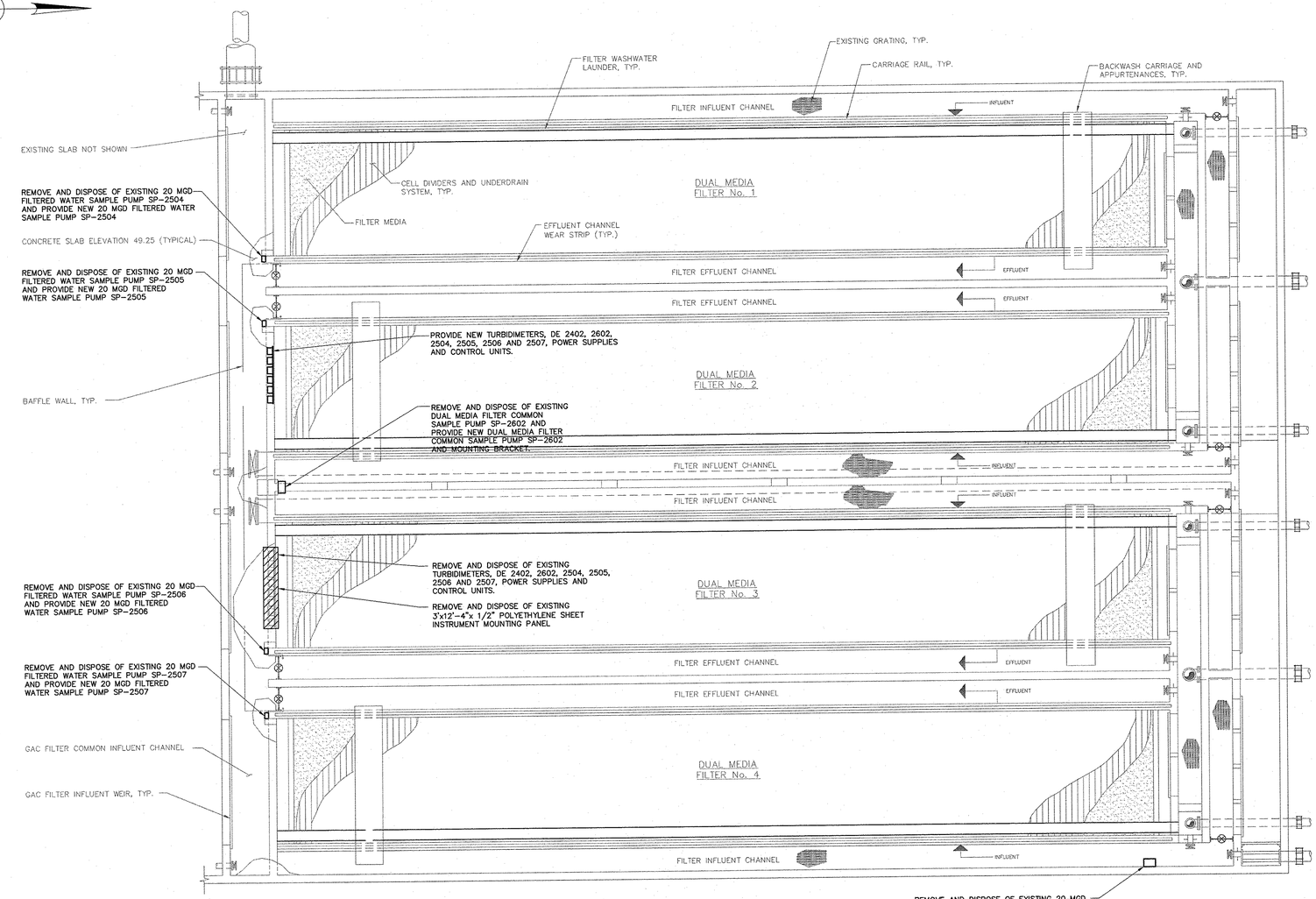

DUAL MEDIA FILTER (20 MGD)

SCALE: 1/8" = 1'-0"

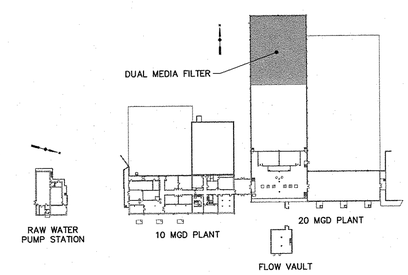

KEY PLAN

N.T.S.

12' 8' 4' 0 8' 16'

BAR SCALE
1/8" = 1'-0"
CHECK GRAPHIC SCALE BEFORE USING

ISSUE FOR BID

980 Washington Street, Suite 325N
Dedham, Massachusetts 02026
800.446.5518 | www.woodardcurran.com
WOODARD & CURRAN
COMMITMENT & INTEGRITY DRIVE RESULTS

THIS DOCUMENT IS THE PROPERTY OF WOODARD & CURRAN INC. AND ITS CLIENT. REPRODUCTION OR MODIFICATION WITHOUT WRITTEN PERMISSION IS PROHIBITED.

REV	DESCRIPTION	DATE
-	-	-
-	-	-
-	-	-
B	ISSUE FOR BID	3/11/15
A	FOR MASSDEP REVIEW	07/18/14

DESIGNED BY: BCC | CHECKED BY: BCC
DRAWN BY: JAR | 224802-M-205.DWG

DUAL MEDIA FILTER ROOM MODIFICATIONS

LOWELL REGIONAL WATER UTILITY
LOWELL, MASSACHUSETTS

WATER SYSTEM IMPROVEMENTS

JOB NO.: 224802.20
DATE: MARCH 2015
SCALE: AS NOTED
SHEET: 23 OF 51

M-205

\\wc\shared\Projects\224802 Lowell MA - Water System Improvement PEF 2011\wip\Drawings\Mechanical\224802-M-205.dwg, Mar 02, 2015 - 6:50am

24x36 SHEET
1:1.00003

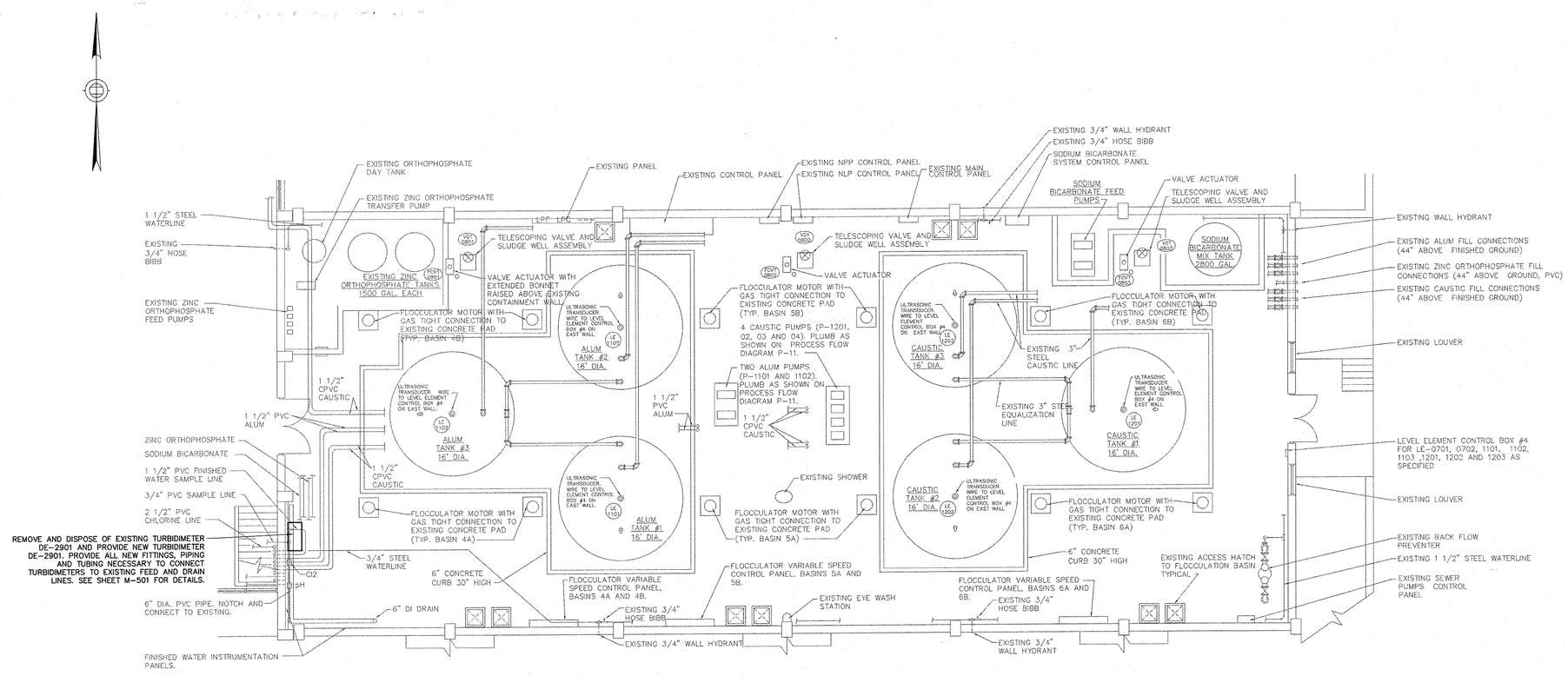

CHEMICAL FEED ROOM MECHANICAL MODIFICATIONS

SCALE: 1/8" = 1'-0"

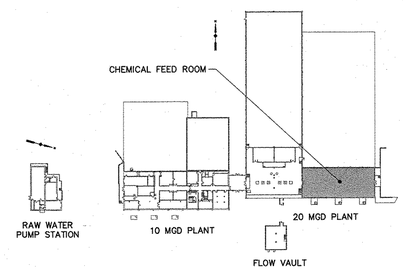

KEY PLAN

N.T.S.

12' 8' 4' 0 8' 16'

BAR SCALE
1/8" = 1'-0"
CHECK GRAPHIC SCALE BEFORE USING

ISSUE FOR BID

980 Washington Street, Suite 325N
Dedham, Massachusetts 02026
800.446.5518 | www.woodardcurran.com
WOODARD & CURRAN
COMMITMENT & INTEGRITY DRIVE RESULTS

THIS DOCUMENT IS THE PROPERTY OF WOODARD & CURRAN INC., AND ITS CLIENT. REPRODUCTION OR MODIFICATION WITHOUT WRITTEN PERMISSION IS PROHIBITED.

COMMONWEALTH OF MASSACHUSETTS
FORREST C. BOWEN
CERTIFICATE NO. 45812
3/11/15

REV	DESCRIPTION	DATE
B	ISSUE FOR BID	3/11/15
A	FOR MASSDEP REVIEW	07/18/14

DESIGNED BY: BCC CHECKED BY: BCC
DRAWN BY: JAR 224802-M-206.DWG

CHEMICAL FEED ROOM MODIFICATIONS

LOWELL REGIONAL WATER UTILITY
LOWELL, MASSACHUSETTS

WATER SYSTEM IMPROVEMENTS

JOB NO.:224802.20
DATE: MARCH 2015
SCALE: AS NOTED
SHEET: 24 OF 51

M-206

\\wc\shares\Projects\224802 Lowell MA - Water System Improvement PEF 2011\wip\Drawings\Mechanical\224802-M-206.dwg, Mar 02, 2015 - 6:50am

24x36 SHEET
1:1

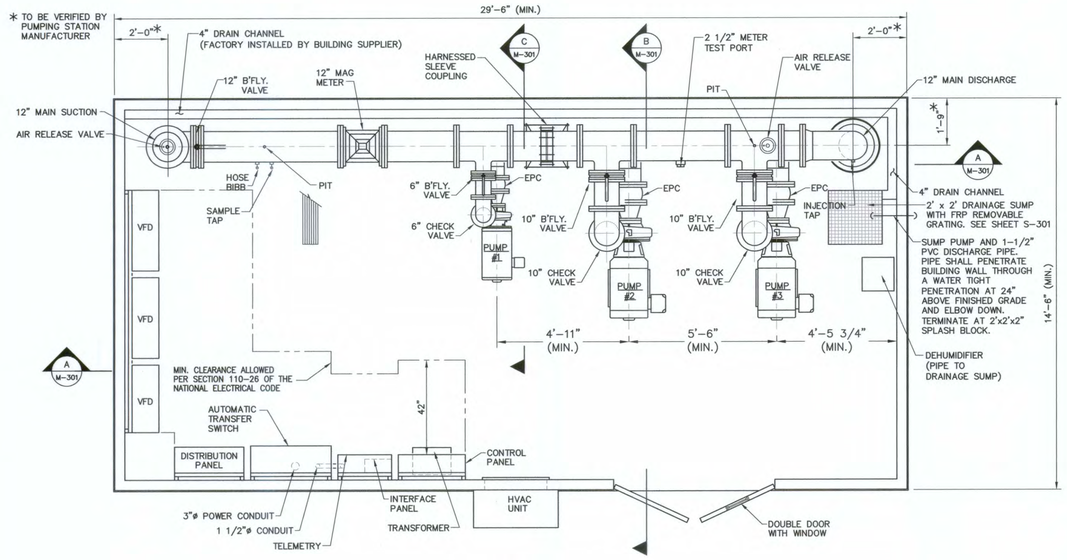

PLAN
SCALE: 3/8" = 1'-0"

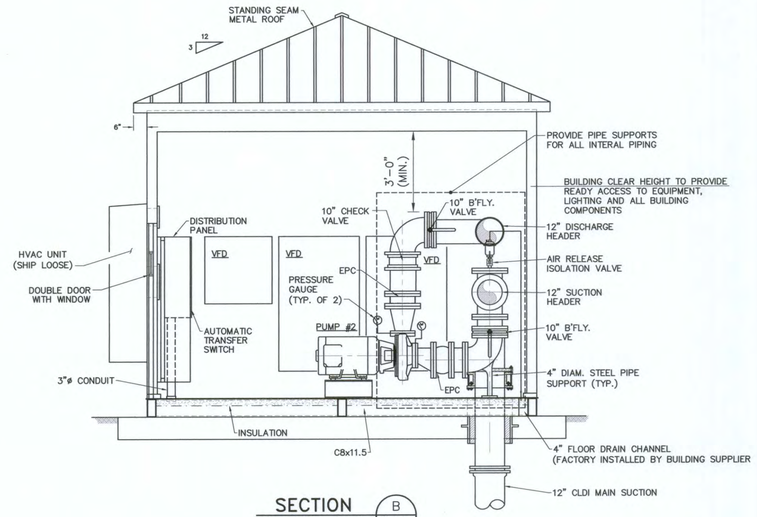

SECTION (B / M-301)
SCALE: 3/8" = 1'-0"

GENERAL NOTES:

1. SLAB PENETRATION FOR 12-INCH MAINS TO BE VERIFIED BY PUMPING STATION MANUFACTURER.
2. PROVIDE PIPE SUPPORTS FOR ALL INTERNAL PIPING.
3. BUILDING CLEAR HEIGHT TO PROVIDE ACCESS TO EQUIPMENT, LIGHTING, AND ALL BUILDING COMPONENTS.
4. INTERIOR WATER PIPING SHALL BE INSULATED TO PREVENT CONDENSATION.

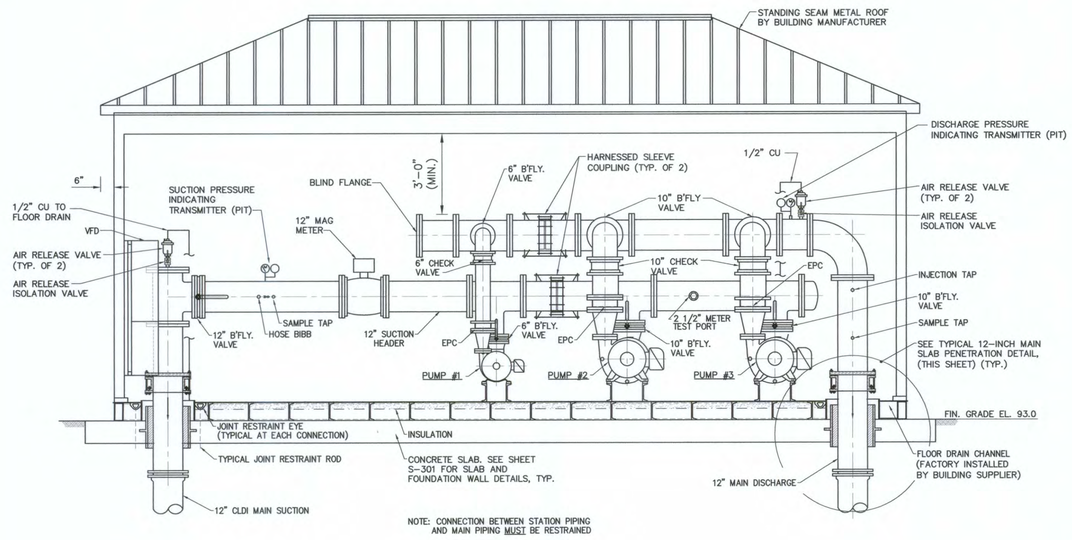

NOTE: CONNECTION BETWEEN STATION PIPING AND MAIN PIPING MUST BE RESTRAINED

SECTION (A / M-301)
SCALE: 3/8" = 1'-0"

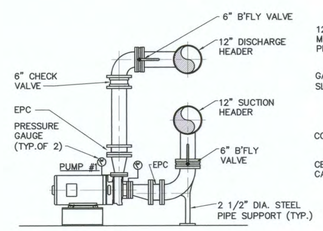

SECTION (C / M-301)
SCALE: 3/8" = 1'-0"

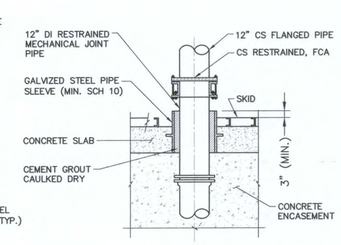

TYPICAL 12-INCH MAIN SLAB PENETRATION DETAIL
N.T.S.

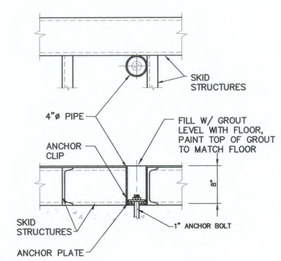

INTERIOR SKID ANCHOR DETAIL
N.T.S.

ISSUE FOR BID

980 Washington Street, Suite 325N
Dedham, Massachusetts 02026
800.446.5518 | www.woodardcurran.com
WOODARD & CURRAN
COMMITMENT & INTEGRITY DRIVE RESULTS

THIS DOCUMENT IS THE PROPERTY OF WOODARD & CURRAN INC. AND ITS CLIENT. REPRODUCTION OR MODIFICATION WITHOUT WRITTEN PERMISSION IS PROHIBITED.

REV	DATE	DESCRIPTION
-		
-		
-		
B	3/11/15	ISSUE FOR BID
A	07/16/14	FOR MASSDEP REVIEW

DESIGNED BY: BOC | CHECKED BY: BOC
DRAWN BY: JAR | 224802-M-301.DWG

STACKPOLE STREET PUMP STATION PLAN AND SECTIONS

LOWELL REGIONAL WATER UTILITY
LOWELL, MASSACHUSETTS

WATER SYSTEM IMPROVEMENTS

JOB NO.: 224802.20
DATE: MARCH 2015
SCALE: AS NOTED
SHEET: 25 OF 51

M-301

\\wc\shared\Projects\224802 Lowell MA - Water System Improvement PEF 2011\wip\Drawings\Mechanical\224802-M-301.dwg, Mar 03, 2015 - 11:26am

24x36 SHEET
1:1

SAMPLE PUMP AND TURBIDIMETER SCHEDULE

SAMPLE PUMP TAG NO.	PUMP TYPE	SAMPLE PUMP LOCATION SHEET NO.	SAMPLE PUMP LOCATION ROOM	SAMPLE LOCATION	PUMP DISCHARGE TO:		TURBIDIMETER TAG NO.	TURBIDIMETER LOCATION SHEET NO.	TURBIDIMETER LOCATION ROOM
NO SAMPLE PUMP				RAW WATER	-	TURBIDIMETER	DE-0101	C-101	RAW WATER PUMP STATION
SP-2201	1	M-201	RAW WATER FLOW CONTROL VAULT	RAW WATER	LAB	-	-	-	-
SP-2301	1	M-201	RAW WATER FLOW CONTROL VAULT	CHEMICALLY TREATED WATER	LAB	-	-	-	-
SP-2401	1	M-204	SAND MEDIA FILTER ROOM	10 MGD SETTLED WATER	LAB	TURBIDIMETER	DE-2401	SEE SAMPLE PUMP LOCATION	
SP-2402	1	M-205	DUAL MEDIA FILTER ROOM	20 MGD SETTLED WATER	LAB	TURBIDIMETER	DE-2402	SEE SAMPLE PUMP LOCATION	
SP-2501	2	M-204	SAND MEDIA FILTER ROOM	SAND FILTER NO. 1 EFFLUENT	-	TURBIDIMETER	DE-2501	SEE SAMPLE PUMP LOCATION	
SP-2502	2	M-204	SAND MEDIA FILTER ROOM	SAND FILTER NO. 2 EFFLUENT	-	TURBIDIMETER	DE-2502	SEE SAMPLE PUMP LOCATION	
SP-2503	2	M-204	SAND MEDIA FILTER ROOM	SAND FILTER NO. 3 EFFLUENT	-	TURBIDIMETER	DE-2503	SEE SAMPLE PUMP LOCATION	
SP-2504	2	M-205	DUAL MEDIA FILTER ROOM	DUAL MEDIA FILTER NO. 1 EFFLUENT	-	TURBIDIMETER	DE-2504	SEE SAMPLE PUMP LOCATION	
SP-2505	2	M-205	DUAL MEDIA FILTER ROOM	DUAL MEDIA FILTER NO. 2 EFFLUENT	-	TURBIDIMETER	DE-2505	SEE SAMPLE PUMP LOCATION	
SP-2506	2	M-205	DUAL MEDIA FILTER ROOM	DUAL MEDIA FILTER NO. 3 EFFLUENT	-	TURBIDIMETER	DE-2506	SEE SAMPLE PUMP LOCATION	
SP-2507	2	M-205	DUAL MEDIA FILTER ROOM	DUAL MEDIA FILTER NO. 4 EFFLUENT	-	TURBIDIMETER	DE-2507	SEE SAMPLE PUMP LOCATION	
SP-2601	1	M-204	SAND MEDIA FILTER ROOM	SAND FILTER COMMON OUTLET	LAB	TURBIDIMETER	DE-2601	SEE SAMPLE PUMP LOCATION	
SP-2602	1	M-205	DUAL MEDIA FILTER ROOM	DUAL MEDIA FILTER COMMON OUTLET	LAB	TURBIDIMETER	DE-2602	SEE SAMPLE PUMP LOCATION	
SP-2801	1	M-203	GAC FILTER ROOM	GAC FILTER COMMON OUTLET	LAB	TURBIDIMETER	DE-2801	SEE SAMPLE PUMP LOCATION	
NO SAMPLE PUMP				FINISH WATER	LAB	TURBIDIMETER	DE-2901	M-206	CHEMICAL ROOM

* SEE SPECIFICATION SECTION 40 91 00 FOR TURBIDIMETERS SPEC AND SCHEDULE AS WELL AS CONTROLLER SCHEDULE.
* SEE SPECIFICATION SECTION 43 21 00 FOR SAMPLE PUMP SPECS.

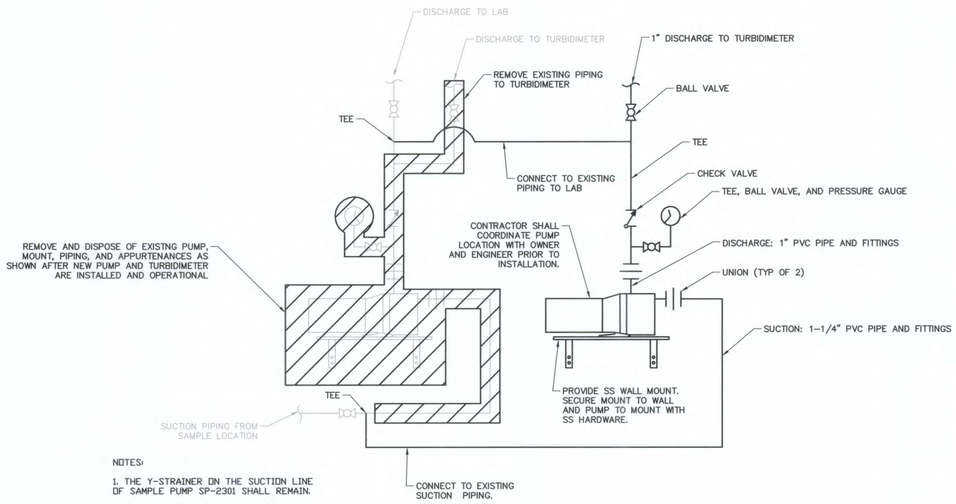

NOTES:

1. THE Y-STRAINER ON THE SUCTION LINE OF SAMPLE PUMP SP-2301 SHALL REMAIN.
2. SAMPLE PUMPS SHALL REMAIN IN SERVICE AT ALL TIMES. SHUTDOWN OF PUMPS REQUIRE WRITTEN APPROVAL OF ENGINEER. COORDINATE SHUTDOWN OF PUMPS AT LEAST 2 WEEKS PRIOR TO WORK.

SAMPLE PUMP – TYPE 1
TYPICAL DEMOLITION AND INSTALLATION DETAIL

NTS

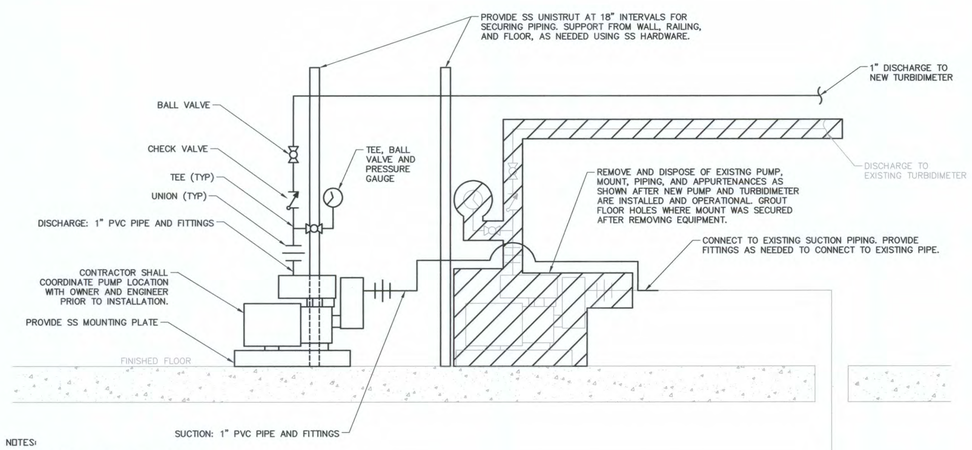

NOTES:

1. SAMPLE PUMPS SHALL REMAIN IN SERVICE AT ALL TIMES. SHUTDOWN OF PUMPS REQUIRE WRITTEN APPROVAL OF ENGINEER. COORDINATE SHUTDOWN OF PUMPS AT LEAST 2 WEEKS PRIOR TO WORK.

SAMPLE PUMP – TYPE 2
TYPICAL DEMOLITION AND INSTALLATION DETAIL

NTS

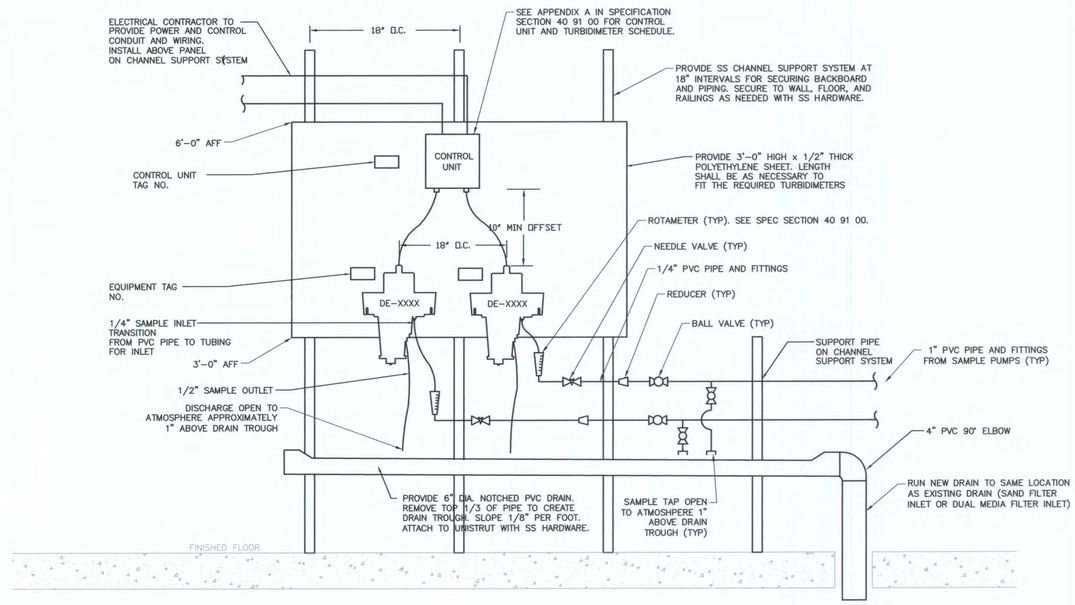

NOTES:

1. THE NUMBER OF TURBIDIMETERS AND CONTROL UNITS AND THE INSTALLATION LOCATION WILL VARY. REFER TO MECHANICAL PLANS AND SPEC SECTION 40 91 00 FOR DETAILS.
2. TURBIDIMETERS SHALL BE INSTALLED PER MANUFACTURER'S INSTRUCTIONS.
3. EXISTING TURBIDIMETERS SHALL REMAIN IN SERVICE AT ALL TIMES UNTIL NOTIFIED BY ENGINEER. SHUTDOWNS REQUIRE WRITTEN APPROVAL OF ENGINEER. COORDINATE SHUTDOWNS AT LEAST 2 WEEKS PRIOR TO WORK.

TURBIDIMETER
TYPICAL INSTALLATION DETAIL

NTS

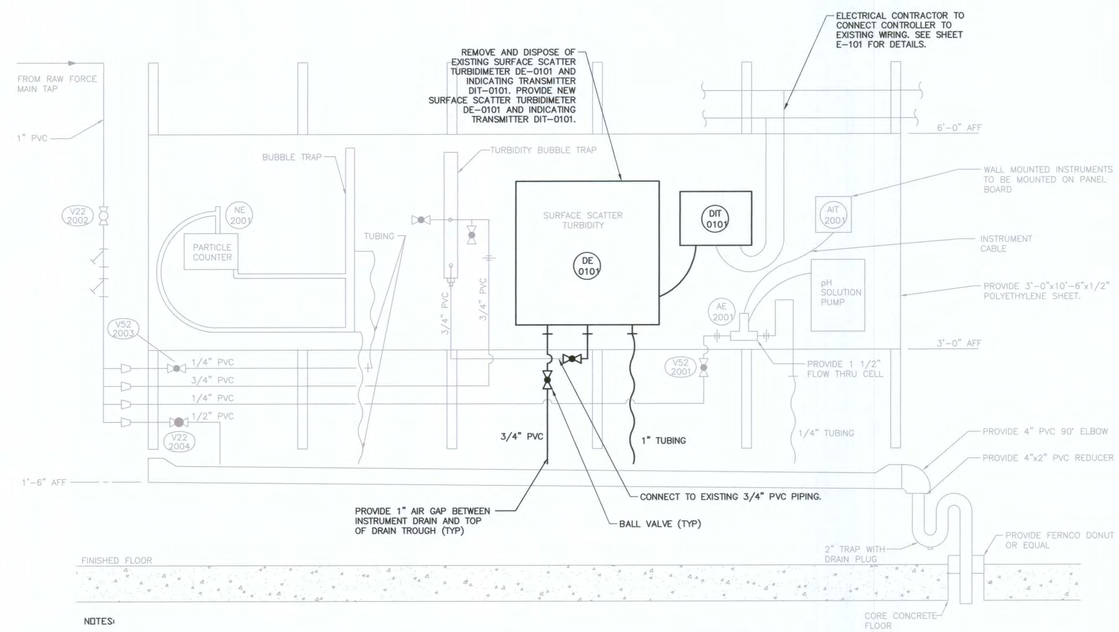

NOTES:

1. TURBIDIMETERS SHALL BE INSTALLED PER MANUFACTURER'S INSTRUCTIONS.
2. CONTRACTOR TO NOTIFY ENGINEER OF REPLACEMENT OF TURBIDIMETER DE-0101 AT LEAST 2 WEEKS IN ADVANCE.

RAW WATER PUMP STATION TURBIDIMETER (DE-0101) INSTALLATION DETAIL

ISSUE FOR BID

980 Washington Street, Suite 325N
Dedham, Massachusetts 02026
800.446.5518 | www.woodardcurran.com
WOODARD & CURRAN
COMMITMENT & INTEGRITY DRIVE RESULTS

THIS DOCUMENT IS THE PROPERTY OF WOODARD & CURRAN INC. AND ITS CLIENT. REPRODUCTION OR MODIFICATION WITHOUT WRITTEN PERMISSION IS PROHIBITED.

REV.	DESCRIPTION	DATE
-		
-		
-		
B	ISSUE FOR BID	3/11/15
A	FOR MASSDEP REVIEW	07/18/14

DESIGNED BY: BCC
DRAWN BY: JAR
CHECKED BY: BCC
224802-M-501.DWG

INSTRUMENTATION MOUNTING PANEL ELEVATIONS

LOWELL REGIONAL WATER UTILITY
LOWELL, MASSACHUSETTS

WATER SYSTEM IMPROVEMENTS

JOB NO.:224802.20
DATE: MARCH 2015
SCALE: AS NOTED
SHEET: 26 OF 51

M-501

\\wc\shared\Projects\224802 Lowell MA - Water System Improvement PEF 2011\wip\Drawings\Mechanical\224802-M-501.dwg, Mar 03, 2015 - 11:44am

PIPING SYMBOLS

- UNION
- FLANGE
- PIPE ANCHOR
- PIPE GUIDE OR SLEEVES
- PIPE ELBOW TURNED DOWN
- PIPE ELBOW TURNED UP
- PIPING TEE–DOWN
- PIPING TEE–UP
- PIPE RISER
- FCO FLOOR CLEAN OUT
- CO CLEAN OUT
- WCO WALL CLEAN OUT
- PIPE PITCHES DOWN
- GATE VALVE
- BALL VALVE
- BUTTERFLY VALVE (MANUAL)
- 2–WAY CONTROL VALVE
- 3–WAY CONTROL VALVE
- MULTI–PURPOSE VALVE
- BALANCING VALVE
- CHECK VALVE
- PLUG VALVE
- GLOBE VALVE
- NEEDLE VALVE
- BACK FLOW PREVENTER
- SOLENOID VALVE
- PRESSURE REDUCING OR REGULATING VALVE
- PRESSURE RELIEF VALVE
- STRAINER W/BLOWDOWN
- STRAINER
- MANUAL AIR VENT
- AUTOMATIC AIR VENT
- PS PRESSURE SWITCH
- FS FLOW SWITCH
- PRESSURE GAUGE AND COCK
- THERMOMETER AND WELL
- TEMPERATURE & PRESSURE TAP (PETE'S PLUG)
- HOSE END DRAIN VALVE WITH CAP
- FLEXIBLE PIPE CONNECTOR
- EXPANSION JOINT
- CONCENTRIC REDUCER/INCREASER
- ECCENTRIC REDUCER/INCREASER
- DIRECTION OF FLOW
- PUMP
- FINNED TUBE BASEBOARD
- DP DIFFERENTIAL PRESSURE TRANSMITTER
- LWC LOW WATER CUT OFF
- TV TEMPERATURE VALVE
- M 3–WAY MOTORIZED VALVE
- TS TEMPERATURE SENSOR
- DRAIN COCK
- VB VACUUM BREAKER
- BFP BACKFLOW PREVENTER
- FZ FREEZE–STAT
- HEATING OR COOLING COIL
- PLEATED FILTER
- PRESSURE DIFFERENTIAL GAUGE
- FAN
- F FUEL OIL FILTER
- LS LEVEL SENSOR
- PEX TO RIGID PIPE CONNECTION
- T THERMOSTAT (T'STAT) OR TEMP. SENSOR
- SD SMOKE DETECTOR
- S SWITCH
- TRAP

AIR DISTRIBUTION SYMBOLS

- 12x16 RECTANGULAR DUCT. (FIRST NUMBER IS SIDE SHOWN) DIMENSIONS IN INCHES
- 12"ø 12 INCH ROUND DUCT
- MOTORIZED DAMPER
- RELIEF DAMPER
- FLEXIBLE DUCT
- DUCT FLEXIBLE CONNECTOR
- RETURN DUCT TURNED UP OR DOWN (DASHED)
- SUPPLY DUCT TURNED UP OR DOWN (DASHED)
- EXHAUST DUCT TURNED UP OR DOWN (DASHED)
- ACOUSTICAL LINING (DUCT DIM. FOR NET FREE AREA)
- ROUND DUCT ELBOW DOWN
- ROUND DUCT ELBOW UP
- SQUARE TO ROUND TRANSITION
- CAP (DUCT AND/OR PIPE)
- INDICATES DUCT, PIPING, EQUIPMENT TO BE REMOVED.
- EA EXHAUST AIR
- OA OUTSIDE AIR
- RA RETURN AIR
- SA SUPPLY AIR
- VD VOLUME DAMPER
- FD FIRE DAMPER
- SD SMOKE DAMPER
- SMD COMBINATION SMOKE/FIRE DAMPER
- RECTANGULAR ELBOW W/TURNING VANES
- DIRECTION OF AIR FLOW (SUPPLY)
- DIRECTION OF AIR FLOW (RETURN/EXHAUST)
- H1 / HV-401 DETAIL NO. / SHEET NO. WHERE DETAIL IS LOCATED
- CUH / 2 EQUIPMENT TAG / EQUIPMENT NO.
- CONNECT TO EXISTING
- UNDERCUT DOOR
- UNDERCUT DOOR
- LOUVERED DOOR

ABBREVIATIONS

AAV	AUTOMATIC AIR VENT
ACU	AIR CONDITIONING UNIT
AD	ACCESS DOOR
AFF	ABOVE FINISHED FLOOR
AHU	AIR HANDLING UNIT
AP	ACCESS PANEL
AS	AIR SEPARATOR
ATC	AUTOMATIC TEMPERATURE CONTROL
ATC	ACOUSTIC TILE CEILING
AV	AIR VENT
B	BOILER
BB	BASEBOARD
BDD	BACKDRAFT DAMPER
BG	BLAST GATE
BFP	BACKFLOW PREVENTER
BLDG	BUILDING
BOD	BOTTOM OF DUCT
BOP	BOTTOM OF PIPE
BTU	BRITISH THERMAL UNIT
C	CONDENSATE
CAS	COMBUSTION AIR SYSTEM
CC	COOLING COIL
CD	CONDENSATE DRAIN
CFF	CAPPED FOR FUTURE
CFM	CUBIC FEET PER MINUTE
CGD	COMBUSTION GAS DETECTION
CLG	CEILING
CO	CLEANOUT
CONT	CONTINUATION
COORD	COORDINATE
CTE	CONNECT TO EXISTING
CU	CONDENSING UNIT
CUH	CABINET UNIT HEATER
CV	CONTROL VALVE
CW	COLD WATER
DC	DUCT COIL
DDC	DIRECT DIGITAL CONTROL
DIA	DIAMETER
DN	DOWN
DWG	DRAWING
DWH	DOMESTIC WATER HEATER
EA	EXHAUST AIR
EF	EXHAUST FAN
ER	EXHAUST REGISTER
ERV	ENERGY RECOVERY UNIT
ET	EXPANSION TANK
ETR	EXISTING TO REMAIN
EXIST.	EXISTING
FBO	FURNISHED BY OWNER
FC	FLEXIBLE CONNECTION
FCV	FLOW CHECK VALVE
FCU	FAN COIL UNIT
FCO	FLOOR CLEANOUT
FD	FIRE DAMPER
FG	FIBERGLASS
FOB	FLAT ON BOTTOM
FOT	FLAT ON TOP
FT	FINNED TUBE RADIATION
FS	FLOW SWITCH
GC	GENERAL CONTRACTOR
GPM	GALLONS PER MINUTE
HB	HOSE BIBB
HC	HEATING COIL
HP	HEAT PUMP
HRU	HEAT RECOVERY UNIT
HTR	HEATER
H & V	HEATING AND VENTILATION
HVAC	HEATING, VENTILATING AND AIR CONDITIONING
HW	HOT WATER
HX	HEAT EXCHANGER
IH	INTAKE HOOD
IN. W.G.	INCHES WATER GAUGE
IV	INTAKE VENT
L	LOUVER
LD	LINED DUCT
LSD	LINEAR SLOT DIFFUSER
MD	MOTOR OPERATED DAMPER (MOD)
MAU	MAKE UP AIR UNIT
MAX	MAXIMUM
MBH	1000 BTU/HR.
ME	MECHANICAL ENGINEER
MFGR	MANUFACTURER
MIN	MINIMUM
MPV	MULTI–PURPOSE VALVE
MTD	MOUNTED
MUA	MAKE UP AIR
NPW	NON–POTABLE WATER
NTS	NOT TO SCALE
OA	OUTSIDE AIR
OED	OPEN ENDED DRAIN
OBD	OPPOSED BLADE DAMPER
OSV	OIL SAFETY VALVE
P	PUMP
PL	PLUMBING
PRV	PRESSURE REDUCING VALVE
R	RELIEF VENT
RA	RETURN AIR
RF	RETURN FAN
RG	RETURN GRILLE
RH	RELIEF HOOD
RHC	REHEAT COIL
RM	ROOM
RPZ	REDUCED PRESSURE ZONE BFP
RR	RETURN REGISTER
RV	RELIEF VALVE
S	SANITARY
SA	SUPPLY AIR
SCV	SELF CONTAINED VALVE
SD	SMOKE DETECTOR
SF	SUPPLY FAN
SG	SUPPLY GRILLE
SR	SUPPLY REGISTER
SS	STAINLESS STEEL
TG	TRANSFER GRILLE
TDV	TRIPLE DUTY VALVE
TMV	TEMPERATURE MIXING VALVE
TOD	TOP OF DUCT
TOP	TOP OF PIPE
TTS	TIGHT TO STEEL
TV	TURNING VANE(S)
TYP	TYPICAL
UH	UNIT HEATER
UIC	UP IN CHASE
UIW	UP IN WALL
UV	UNIT VENTILATOR
V	VENT
VAV	VARIABLE AIR VOLUME
VB	VACUUM BREAKER
VTR	VENT THRU ROOF
VD	VOLUME DAMPER
VCFF	VALVED AND CAPPED FOR FUTURE
VFD	VARIABLE FREQUENCY DRIVE
VS	VARIABLE SPEED
W	WASTE
W/	WITH
WCO	WALL CLEANOUT
WH	WALL HYDRANT
WMS	WIRE MESH SCREEN

GENERAL DRAWING NOTES:

1. ALL WORK SHALL BE PERFORMED IN A CLEAN AND WORKMANLIKE MANNER. CARE SHALL BE EXERCISED TO MINIMIZE ANY INCONVENIENCE OR DISTURBANCE TO OTHER AREAS OF THE BUILDING WHICH ARE TO REMAIN IN OPERATION. ISOLATE WORK AREAS BY MEANS OF TEMPORARY PARTITIONS AND/OR TARPS TO KEEP DUST WITHIN THE CONSTRUCTION AREA.

2. NO DUCTWORK, EQUIPMENT, ETC. SHALL BE REMOVED, DISCONNECTED OR SHUT DOWN WITHOUT PRIOR REVIEW WITH THE OWNER AND/OR ENGINEER TO CONFIRM THAT AREAS TO REMAIN IN OPERATION WILL NOT BE AFFECTED. IF ANY AREAS NOT WITHIN THE SCOPE OF WORK ARE AFFECTED BY A SHUTDOWN, REMOVAL OR DISCONNECTION, 1 WEEK ADVANCE NOTICE MUST BE GIVEN TO THE OWNER INDICATING WHICH AREAS WILL BE AFFECTED, WHEN THE PROPOSED SHUTDOWN WILL OCCUR, AND FOR HOW LONG A PERIOD OF TIME.

3. ALL ITEMS REMOVED SHALL BECOME THE PROPERTY OF THE OWNER AND SHALL BE DISPOSED OF AS PER THE OWNERS INSTRUCTIONS, UNLESS INDICATED OTHERWISE. ALL ITEMS WHICH ARE NOT TO BE STORED ON SITE SHALL BE REMOVED FROM THE BUILDING IMMEDIATELY.

4. THE CONTRACTOR SHALL FIELD VERIFY ALL DIMENSIONS AND EXISTING CONDITIONS PRIOR TO PROCEEDING WITH ANY WORK. WHERE DISCREPANCIES OCCUR BETWEEN THESE DOCUMENTS AND EXISTING CONDITIONS, THE DISCREPANCY SHALL BE REPORTED TO THE OWNER AND/OR ENGINEER FOR EXPEDITING AND RESOLUTION.

5. ALL SHUT DOWNS OF EXISTING SYSTEMS SHALL BE SCHEDULED AND APPROVED BY THE OWNER PRIOR TO COMMENCING WITH WORK.

6. CLEAN THE JOB SITE DAILY AND REMOVE FROM THE PREMISES ANY DIRT AND DEBRIS CAUSED BY THE PERFORMANCE OF THE WORK INCLUDED IN THIS CONTRACT.

7. THE CONTRACTOR SHALL BE RESPONSIBLE FOR THE SAFEKEEPING OF HIS OWN PROPERTY ON THE JOB SITE. OWNER ASSUMES NO RESPONSIBILITY FOR PROTECTION OF PROPERTIES AGAINST FIRE, THEFT AND ENVIRONMENTAL CONDITIONS.

8. EXISTING MATERIALS THAT ARE REMOVED SHALL NOT BE REUSED IN NEW SYSTEMS, EXCEPT WHERE INDICATED AS SUCH ON THE DRAWINGS. ALL MATERIALS AND EQUIPMENT LISTED AS NEW, MUST BE NEW.

9. PROVIDE ALL NECESSARY TEMPORARY OR PERMANENT CAPS OR PLUGS FOR PIPING AND DUCTWORK. DO NOT LEAVE PIPING AND/OR DUCTWORK OPEN ENDED.

10. WHERE USED THE TERM "PROVIDE" SHALL MEAN "FURNISH AND INSTALL".

11. THE CONTRACTOR SHALL COORDINATE HIS WORK WITH ALL OTHER TRADES PRIOR TO FABRICATION, PURCHASE AND/OR INSTALLATION OF ALL WORK. ALL OFFSETS IN PIPING AND DUCTS TO AVOID OBSTRUCTIONS SHALL BE PROVIDED AT NO COST TO THE OWNER.

12. PROVIDE ACCESS PANELS FOR ALL CONCEALED DAMPERS, VALVES AND EQUIPMENT.

13. IF A SECTION OF DUCT OR PIPE IS NOT LABELED FOR SIZE, THAN THE LARGER SIZE INDICATED ON THE DRAWINGS SHALL PREVAIL. SIZE OF DUCT RUN–OUTS TO DIFFUSERS SHALL EQUAL THE DIFFUSER NECK SIZE.

14. DUCT AND PIPE SHALL NOT RUN ALONG FULL HEIGHT PARTITIONS.

15. THE CONTRACTOR SHALL PROVIDE ALL TEMPERATURE CONTROLS INCLUDING WIRING, TUBING AND THERMOSTATS AND ALL MISCELLANEOUS APPURTENANCES TO MEET THE INTENT OF THESE DOCUMENTS. PROTECT EXISTING THERMOSTATS AND INSTALL NEW AT 4.5 FEET AFF.

16. THE CONTRACTOR IS RESPONSIBLE FOR ALL WORK, MATERIALS AND LABOR TO SATISFY A COMPLETE WORKING SYSTEM WHETHER SPECIFIED OR IMPLIED.

17. ALL WORK IS TO BE PERFORMED IN STRICT COMPLIANCE WITH LOCAL CODES AND ALL OTHER REGULATIONS GOVERNING WORK OF THIS NATURE.

18. THE CONTRACTOR SHALL, BEFORE SUBMITTING ANY PROPOSAL, EXAMINE THE PROPOSED SITE AND SHALL DETERMINE FOR HIMSELF THE CONDITIONS THAT MAY AFFECT THE WORK. ABSOLUTELY NO CLAIMS FOR ADDITIONAL COMPENSATION WILL BE CONSIDERED FOR CONDITIONS REASONABLY VISIBLE UPON EXAMINATION OF SITE.

19. ALL EQUIPMENT AND MATERIALS SHALL BE AS SPECIFIED OR "APPROVED EQUAL" BY THE ENGINEER.

20. THE CONTRACTOR SHALL SECURE ALL PERMITS OR APPLICATIONS AND PAY ANY AND ALL FEES.

21. THE MECHANICAL PLANS ARE INTENDED TO BE DIAGRAMMATIC AND ARE BASED ON ONE MANUFACTURER'S EQUIPMENT. THEY ARE NOT INTENDED TO SHOW THE EXACT ROUTING OF SYSTEMS OR LOCATION OF COMPONENTS. THE EXACT LOCATIONS, DIMENSIONS AND ALL OTHER DETAILS OF EQUIPMENT ARE THE RESPONSIBILITY OF THIS CONTRACTOR. THIS CONTRACTOR SHALL VERIFY THE ACTUAL DIMENSIONS OF THE EQUIPMENT PROPOSED TO ENSURE THAT THE EQUIPMENT WILL FIT IN THE AVAILABLE SPACE. PROVIDE ALL DUCT AND PIPE TRANSITIONS REQUIRED FOR CONNECTION TO EQUIPMENT.

PIPING DESIGNATIONS

C	CONDENSATE
CD	CONDENSATE DRAIN
CHWR	CHILLED WATER RETURN
CHWS	CHILLED WATER SUPPLY
CWR	CONDENSER WATER RETURN
CWS	CONDENSER WATER SUPPLY
CW	COLD WATER
DCW	DOMESTIC COLD WATER
DHW	DOMESTIC HOT WATER
F.O.R.	FUEL OIL RETURN
F.O.S.	FUEL OIL SUPPLY
HPS	HIGH PRESSURE STEAM
HWR	HOT WATER RETURN
HWS	HOT WATER SUPPLY
LPS	LOW PRESSURE STEAM
MPS	MEDIUM PRESSURE STEAM
RG	REFRIGERANT GAS
RL	REFRIGERANT LIQUID
S	SANITARY
V	VENT

ISSUE FOR BID

WOODARD & CURRAN
980 Washington Street, Suite 325N
Dedham, Massachusetts 02026
800.446.5518 | www.woodardcurran.com
COMMITMENT & INTEGRITY DRIVE RESULTS

THIS DOCUMENT IS THE PROPERTY OF WOODARD & CURRAN INC. AND ITS CLIENT. REPRODUCTION OR MODIFICATION WITHOUT WRITTEN PERMISSION IS PROHIBITED.

REV	DESCRIPTION	DATE
B	ISSUE FOR BID	3/11/15
A	FOR MASSDEP REVIEW	07/18/14

DESIGNED BY: JF CHECKED BY: MJ
DRAWN BY: JF 224802.21 – H-001.DWG

HVAC LEGEND & GENERAL NOTES

LOWELL REGIONAL WATER UTILITY
LOWELL, MASSACHUSETTS

WATER SYSTEM IMPROVEMENTS

JOB NO.:224802.20
DATE: MARCH 2015
SCALE: AS NOTED
SHEET: 27 OF 51

H-001

24x36 SHEET 1:1

\\wc\shared\Projects\224802 Lowell MA – Water System Improvement PEF 2011\wip\Drawings\HVAC (WTP)\224802.21 – H-001.dwg, Mar 04, 2015 – 6:58am

24x36 SHEET
1:1

HVAC DEMOLITION NOTES:

1. THE INTENT OF THE DEMOLITION PLANS IS TO IDENTIFY EXISTING CONDITIONS. HOWEVER, ALL HVAC DEVICES MAY NOT NECESSARILY BE INDICATED ON THE DRAWINGS. FIELD VERIFY AND ADJUST WORK TO SUIT ALL CONDITIONS FOUND.

2. ALL ITEMS SHOWN HATCHED ARE ITEMS TO BE REMOVED AND DISPOSED.

3. ALL ITEMS INDICATED FOR REMOVAL SHALL BE REMOVED WITH ALL ASSOCIATED HARDWARE AND ACCESSORIES COMPLETE BACK TO THE SOURCE. ALL FLOOR AND WALL PENETRATIONS THAT ARE NOT TO BE RE-USED SHALL BE IN-FILLED AND BROUGHT TO A FINISHED APPEARANCE.

4. EXISTING SUPPLY DIFFUSERS AND RETURN GRILLES ARE TO REMAIN. CONTRACTOR SHALL CLEAN ALL DEVICES PRIOR TO NEW SYSTEM INSTALLATION.

HVAC KEYED NOTES:

1. EXISTING HOT WATER UNIT HEATERS, PIPING, AND ALL ANCILLARY DEVICES ARE TO REMAIN.
2. REMOVE AND DISPOSE EXISTING ROOFTOP UNIT. DISCONNECT UNIT FROM EXISTING ROOF CURB. PREPARE ROOF CURB FOR NEW ROOF CURB ADAPTOR INSTALLATION. DISCONNECT SUPPLY AND RETURN DUCTWORK, TEMPERATURE CONTROLS AND ELECTRICAL CONNECTIONS. DISCONNECT NATURAL GAS PIPING FROM UNIT. CLEAN AND PREPARE FOR NEW UNIT INSTALLATION.
3. EXISTING DUCTWORK TO BE REMOVED AND DISPOSED OF. REMOVAL SHALL INCLUDE INSULATION, HANGERS, CONTROL AIR VALVES W/ ALL ANCILLARY DEVICES.
4. EXISTING LOW PRESSURE DUCTWORK AND ASSOCIATED SUPPLY DIFFUSERS ARE TO REMAIN – TYPICAL.
5. EXISTING THERMOSTAT W/ WIRING SHALL BE REMOVED AND DISPOSED OF.

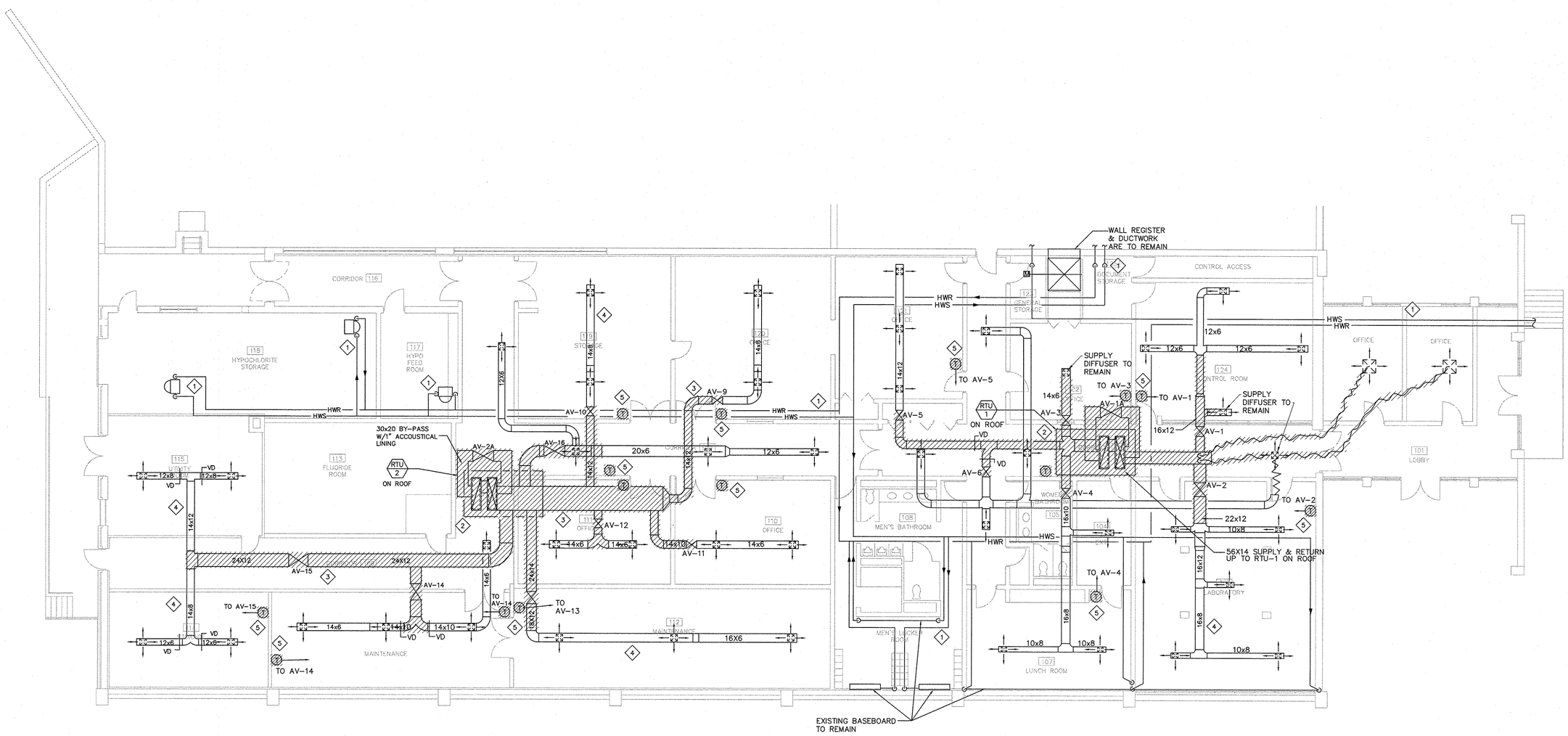

HVAC DEMOLITION PLAN

SCALE: 1/8" = 1'-0"

ISSUE FOR BID

980 Washington Street, Suite 325N
Dedham, Massachusetts 02026
800.446.5518 | www.woodardcurran.com
WOODARD & CURRAN
COMMITMENT & INTEGRITY DRIVE RESULTS

THIS DOCUMENT IS THE PROPERTY OF WOODARD & CURRAN INC. AND ITS CLIENT. REPRODUCTION OR MODIFICATION WITHOUT WRITTEN PERMISSION IS PROHIBITED.

REV	DESCRIPTION	DATE
A	FOR MASSDEP REVIEW	07/18/14
B	ISSUE FOR BID	3/11/15

DESIGNED BY: JF
DRAWN BY: JF
CHECKED BY: MJ
224802.21 - H-201.DWG

WATER TREATMENT PLANT
HVAC DEMOLITION PLAN

LOWELL REGIONAL WATER UTILITY
LOWELL, MASSACHUSETTS

WATER SYSTEM IMPROVEMENTS

JOB NO.:224802.20
DATE: MARCH 2015
SCALE: AS NOTED
SHEET: 28 OF 51

H-201

\\wc\shared\Projects\224802 Lowell MA - Water System Improvement PEF 2011\wip\Drawings\HVAC (WIP)\224802.21 - H-201.dwg, Mar 04, 2015 - 6:59am

24x36 SHEET
1:1

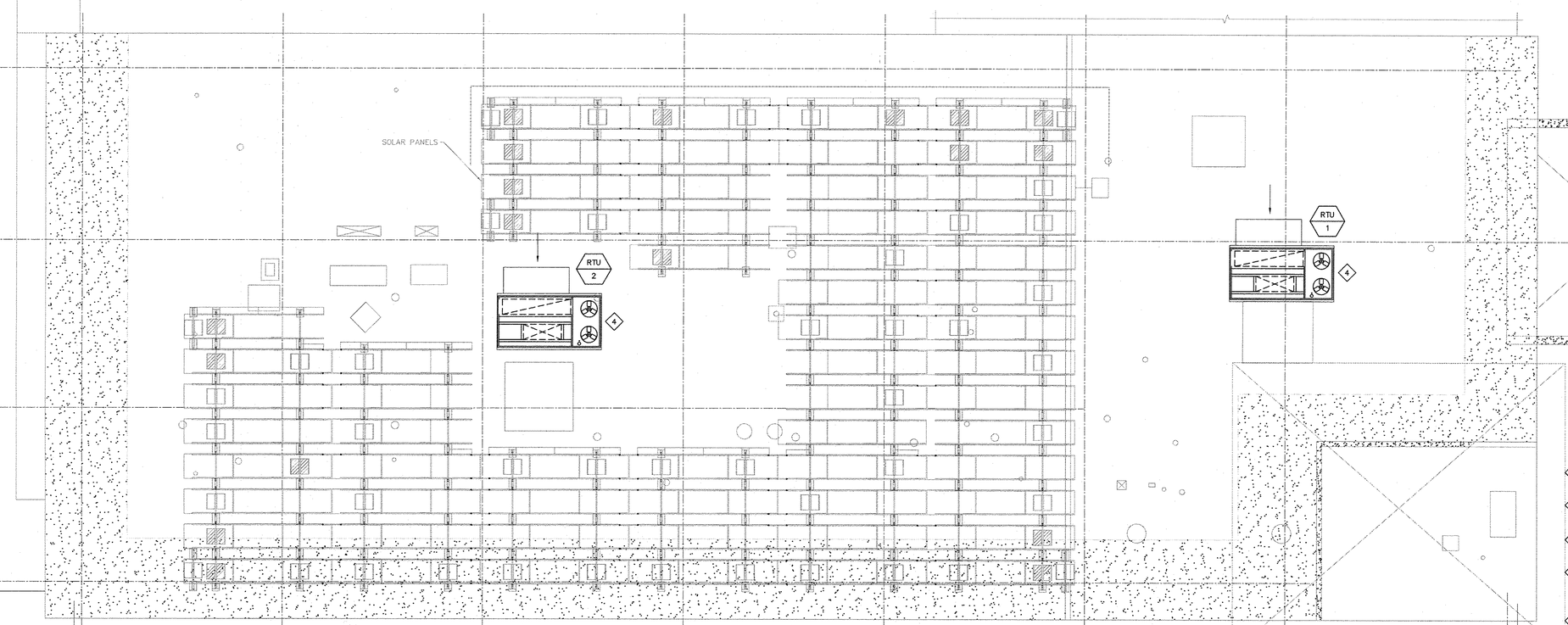

HVAC ROOF PLAN

SCALE: 1/8" = 1'-0"

HVAC KEYED NOTES:

1. 40x14 SUPPLY DUCT UP. TRANSITION AND CONNECT TO UNIT SUPPLY OUTLET FLANGE UTILIZING FLEXIBLE CONNECTIONS.
2. RETURN DUCT FULL SIZE OF UNIT INLET FLANGE. DUCT SHALL TERMINATE OPEN ENDED W/WMS. DUCT SHALL BE PROVIDED WITH 1" ACOUSTICAL DUCT LINING.
3. 40x12 SUPPLY DUCT UP. TRANSITION AND CONNECT TO UNIT SUPPLY OUTLET FLANGE UTILIZING FLEXIBLE CONNECTIONS.
4. ROOFTOP UNITS RTU-1 & RTU-2 SHALL BE INSTALLED ON AN ADAPTOR CURB WHICH SHALL BE INSTALLED ON THE EXISTING UNIT ROOF CURB. CONTRACTOR SHALL INSTALL THE NEW UNITS WITH ALL AIRTIGHT CONNECTIONS.
5. EXTEND AND CONNECT GAS PIPING TO NEW UNIT.
6. RETURN AIR PATH TO RTU-1. CONTRACTOR SHALL CONFIRM THAT THE WALLS DO NOT EXTEND ABOVE HUNG CEILING TO UNDERSIDE OF DECK. 12 SQ. FT. FREE AREA IS THE MINIMUM OPENING REQUIRED IN WALL ABOVE HUNG CEILING.
7. 3/4" HWS&R RUNOUT TO VAV BOX. TYPICAL

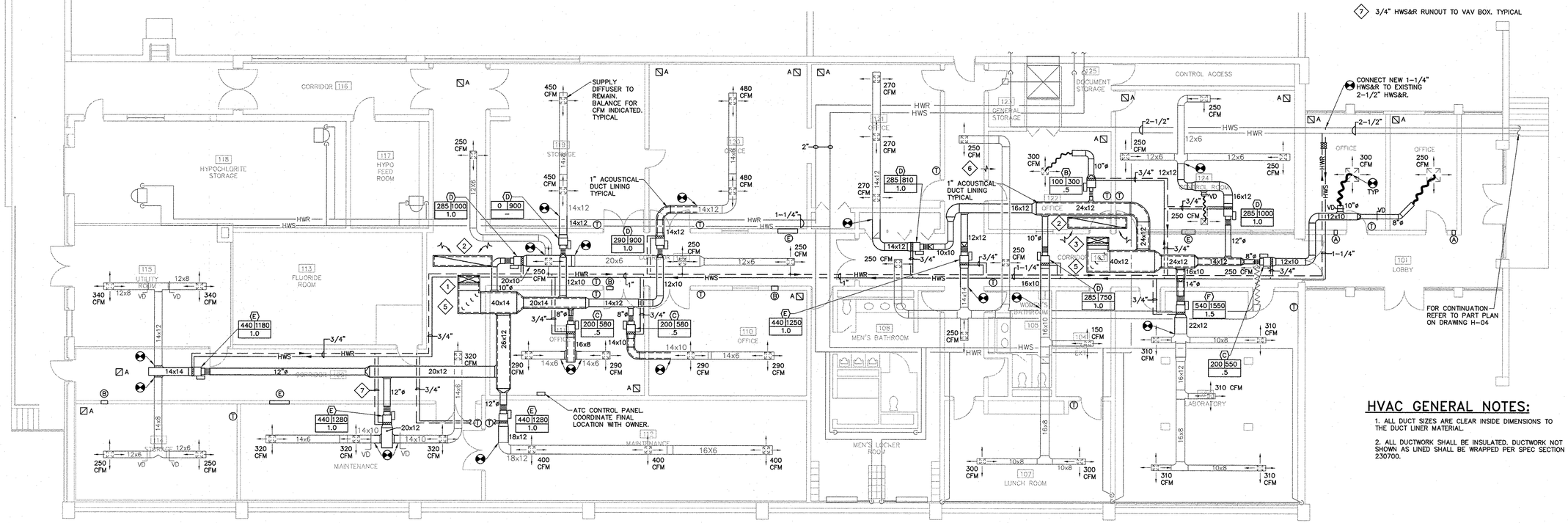

HVAC FLOOR PLAN

SCALE: 1/8" = 1'-0"

HVAC GENERAL NOTES:

1. ALL DUCT SIZES ARE CLEAR INSIDE DIMENSIONS TO THE DUCT LINER MATERIAL.
2. ALL DUCTWORK SHALL BE INSULATED. DUCTWORK NOT SHOWN AS LINED SHALL BE WRAPPED PER SPEC SECTION 230700.

ISSUE FOR BID

980 Washington Street, Suite 325N
Dedham, Massachusetts 02026
800.446.5518 | www.woodardcurran.com
WOODARD & CURRAN

COMMITMENT & INTEGRITY DRIVE RESULTS

THIS DOCUMENT IS THE PROPERTY OF WOODARD & CURRAN INC. AND ITS CLIENT. REPRODUCTION OR MODIFICATION WITHOUT WRITTEN PERMISSION IS PROHIBITED.

COMMONWEALTH OF MASSACHUSETTS
MARK A. MACHADO
MECHANICAL
NO. 45868
REGISTERED PROFESSIONAL ENGINEER

REV.	DESCRIPTION	DATE
A	FOR MASSDEP REVIEW	07/19/14
B	ISSUE FOR BID	3/11/15

DESIGNED BY: JF
DRAWN BY: JF
CHECKED BY: MJ
224802.21 - H-202.DWG

WATER TREATMENT PLANT
HVAC ROOF & FLOOR PLANS

LOWELL REGIONAL WATER UTILITY
LOWELL, MASSACHUSETTS

WATER SYSTEM IMPROVEMENTS

JOB NO.: 224802.20
DATE: MARCH 2015
SCALE: AS NOTED
SHEET: 29 OF 51

H-202

\\wc\shared\Projects\224802 Lowell MA - Water System Improvement PEF 2011\wip\Drawings\HVAC (WIP)\224802.21 - H-202.dwg, Mar 04, 2015 - 6:59pm

24x36 SHEET
1:1

ROOFTOP SELF CONTAINED AIR CONDITIONING UNIT SCHEDULE

UNIT NO.	LOCATION	SUPPLY FAN (W/VFD) CFM	CAPACITY CONTROL RANGE	CAPACITY CONTROL TYPE	EXT. STATIC PRESS. (IN. W.G.)	FAN RPM	MOTOR HP	MOTOR RPM	EXHAUST FAN (W/VFD) CFM	CAPACITY CONTROL RANGE	CAPACITY CONTROL TYPE	EXT. STATIC PRESS. (IN. W.G.)	FAN RPM	MOTOR HP	MOTOR RPM	EVAPORATOR COIL MINIMUM O.A. CFM	TOTAL COOLING MBH	SENSIBLE COOLING MBH	COIL ENT. AIR DB (°F)	COIL ENT. AIR WB (°F)	COIL LVG. AIR DB (°F)	COIL LVG. AIR WB (°F)	COMPRESSOR TYPE	COMPRESSOR NO.	REFRIG. TYPE	CONDENSER FAN NO.	CONDENSER FAN HP	GAS-FIRED HEATING SECTION CAPACITY (MBH) INPUT	CAPACITY (MBH) OUTPUT	AIR DATA EAT (°F)	AIR DATA LAT (°F)	AIR DATA TEMP. RISE (°F)	FILTER TYPE	FILTER EFF. %	UNIT WEIGHT (LBS.)	ELECTRICAL V	PH	Hz	MCA	MOCP	MANUFACTURER & MODEL NO.
RTU-1	ROOF	6000	100-30	VAV	1.5	803	5	3450	4800	100-30	VFD	.5	875	5	1750	1200	201.9	142	78.2	67	56.2	56	SCROLL	2	R410A	2	1.0	350	284	59	102	43	2" PLEATED THROWAWAY MERV 8	30	2350	460	3	60	49	57	TRANE YHD210
RTU-2	ROOF	7600	100-30	VAV	1.5	833	7.5	3470	6000	100-30	VFD	.5	916	5	1750	1600	278.8	193.5	78.4	67	58.6	56.6	SCROLL	2	R410A	2	1.0	350	284	58.3	91	32.7	2" PLEATED THROWAWAY MERV 8	30	2440	460	3	60	63	77	TRANE YHD300

ROOFTOP UNIT SHALL BE PROVIDED WITH THE FOLLOWING: PREMIUM EFFICIENCY, ECONOMIZER COMPARATIVE ENTHALPY 0-100% WITH BAROMETRIC RELIEF, MODULATING POWER EXHAUST, PREMIUM EFFICIENCY MOTORS, SUPPLY FAN W/ VFD CONTROL, RETURN AIR SMOKE DETECTOR, 15A GFI CONVENIENCE OUTLET, BACnet COMMUNICATIONS INTERFACE, CURB ADAPTOR.

AIR DISTRIBUTION DEVICE SCHEDULE

SYMBOL	KEY	SERVICE	TYPE	MANUFACTURER	MODEL NO.	TYPE FINISH	MAX NC	DAMPER YES/NO	REMARKS
A	SYMBOL-NECK SIZE-(CFM)	RETURN	CEILING GRILLE	TITUS	PAR	#26 WHITE	30	NO	12"x12" FACE SIZE W/ 10"x10" NECK (NON-DUCTED)
B	SYMBOL-NECK SIZE-CFM	SUPPLY	CEILING DIFFUSER	TITUS	OMNI	#26 WHITE	30	NO	12"x12" MODULE SIZE

OPENING SCHEDULE

THE SCHEDULED OPENING SIZES ARE OPENINGS IN WALLS ABOVE HUNG CEILINGS FOR AIR TRANSFER

(A) - 6"x6"
(B) - 12"x12"
(C) - 18"x12"
(D) - 24"x12"
(E) - 36"x12"

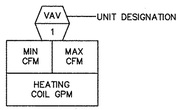

VAV BOX SYMBOL KEY

VARIABLE AIR VOLUME SUPPLY AIR TERMINAL BOX SCHEDULE

SYMBOL	INLET SIZE (IN.)	UNIT OPERATING RANGE (CFM) MIN. SETTING RANGE	MAX. SETTING RANGE	UNIT MAX. PRESSURE DROP @ MAX. CFM (IN. W.G.)	MAX. NC @ UNIT MAX. CFM AND 1" W.G. UNIT PRESSURE DROP	HOT WATER HEATING COIL HEATING (MIN) AIR RANGE (CFM) MIN. MBH RANGE	GPM	ROWS / FPI	REMARKS
A	5	65 - 125	120 - 250	0.25	35	65 - 85		1	1,2
						1.6 - 2.1	0.5	10	
B	6	100 - 200	251 - 400	0.45	35	100 - 130		1	1,2
						2.5 - 3.3	0.5	10	
C	8	200 - 325	401 - 650	0.55	35	200 - 240		1	1,2
						5.0 - 6.0	0.5	10	
D	10	285 - 500	651 - 1000	0.6	35	285 - 355		1	1,2
						7.0 - 8.9	1.0	10	
E	12	440 - 700	1001 - 1400	0.6	35	440 - 525		1	1,2
						11.0 - 13.1	1.0	10	
F	14	540 - 900	1401 - 2200	0.6	35	540 - 660		1	1,2
						13.5 - 16.5	1.5	10	

1. SELECTION BASED ON TITUS MODEL ESV, NAILOR SERIES 3000, ENVIRO-TEC MODEL SDR, METALAIRE SERIES 400TH.
2. FOR CONTROL TYPES REFER TO SPECIFICATIONS.

PUMP SCHEDULE

PUMP NO.	LOCATION	SERVICE	TYPE	GPM	TOTAL HEAD (FT.)	IMPELLER DIAMETER (IN.)	MAX WORKING PRESS. (PSIG)	TYPE SEAL	MOTOR HP	RPM	V	PH	Hz	FLA	MANUFACTURER & MODEL NUMBER	REMARKS
P-7	BOILER ROOM #128	HOT WATER	IN-LINE	54.8	40	6.375	150	MECHANICAL	1.5	1750	460	3	60	2.2	BELL & GOSSETT SERIES 60 SIZE 1-1/2x1-1/2X7	
P-8	BOILER ROOM #128	HOT WATER	IN-LINE	54.8	40	6.375	150	MECHANICAL	1.5	1750	460	3	60	2.2	BELL & GOSSETT SERIES 60 SIZE 1-1/2x1-1/2X7	STAND-BY PUMP

NOTE: NEW PUMPS HAVE BEEN NUMBERED P-7 & P-8 TO REPLICATE EXISTING.

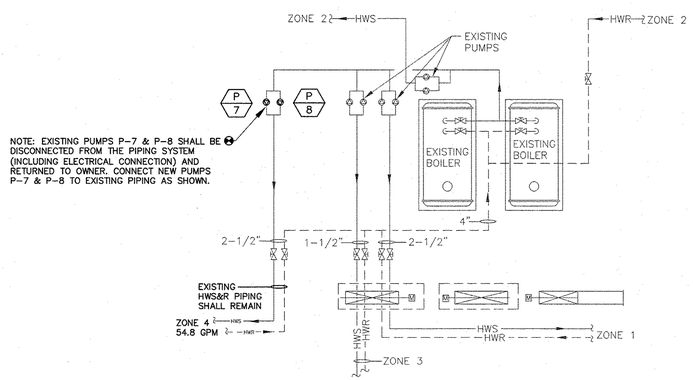

PART PLAN - EXISTING BOILER ROOM #128
NTS

ISSUE FOR BID

980 Washington Street, Suite 325N
Dedham, Massachusetts 02026
800.446.5518 | www.woodardcurran.com
WOODARD & CURRAN
COMMITMENT & INTEGRITY DRIVE RESULTS

THIS DOCUMENT IS THE PROPERTY OF WOODARD & CURRAN INC. AND ITS CLIENT. REPRODUCTION OR MODIFICATION WITHOUT WRITTEN PERMISSION IS PROHIBITED.

REV	DESCRIPTION	DATE
B	ISSUE FOR BID	3/11/15
A	FOR MASSDEP REVIEW	07/18/14

DESIGNED BY: JF
DRAWN BY: JF
CHECKED BY: MJ
224802.21 - H-203.DWG

HVAC SCHEDULES & BOILER ROOM PART PLAN

LOWELL REGIONAL WATER UTILITY
LOWELL, MASSACHUSETTS

WATER SYSTEM IMPROVEMENTS

JOB NO.: 224802.20
DATE: MARCH 2015
SCALE: AS NOTED
SHEET: 30 OF 51

H-203

\\wc\shared\Projects\224802 Lowell MA - Water System Improvement PEF 2011\wip\Drawings\HVAC (WTP)\224802.21 - H-203.dwg, Mar 04, 2015 - 7:00pm

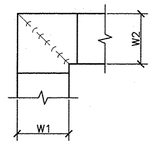

NOTE:

1. ALL VANE ELBOWS SHALL BE CONSTRUCTED AND INSTALLED AS DETAILED BY SMACNA.
2. WHEN W1 DOES NOT EQUAL W2, VANE SHALL BE SINGLE THICKNESS VANE TYPE REGARDLESS OF W DIMENSION.
3. ALL SINGLE THICKNESS VANES SHALL HAVE A 2" [50mm] RADIUS, 1 1/2" [40mm] MAXIMUM SPACE BETWEEN VANES AND A 3/4" [20mm] TRAILING EDGE.
4. WHEN W EQUALS W2 AND W1 IS GREATER THAN 20" [500mm] VANES SHALL BE DOUBLE VANE TYPE.

DUCTWORK SQUARE VANE ELBOWS DETAIL

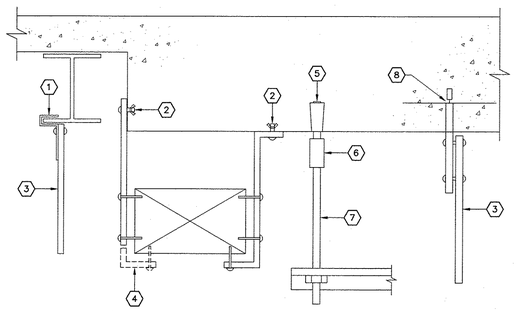

1. H.I.T. OR CADDY BEAM CLIP FOR APPROPRIATE BEAM THICKNESS.
2. PHILLIPS JS14C (BSA APPROVAL NO. 39058 SM) OR EQUAL, OR FORCED ENTRY FASTENERS.
3. BAND IRON HANGER PER CODE OR SMACNA.
4. TURN UNDER WHEN DUCT IS OVER 47" WIDE.
5. PHILLIPS JJ8C OR EQUAL.
6. THREADED ROD COUPLING.
7. THREADED ROD (SIZE AS REQUIRED 3/8" MIN.)
8. SCISSOR CLAMP ON REINFORCED ROD.
9. G.A.T. CHANNEL CLAMP SLAB FASTENER.
10. STEEL ROD (3/8" MIN.)
11. FORCED ENTRY FASTENERS APPROVED ONLY IF ACCEPTABLE TO LOCAL CODE.

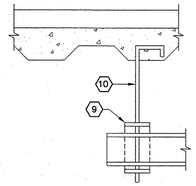

METHOD OF HANGING DUCTWORK DETAIL

N.T.S.

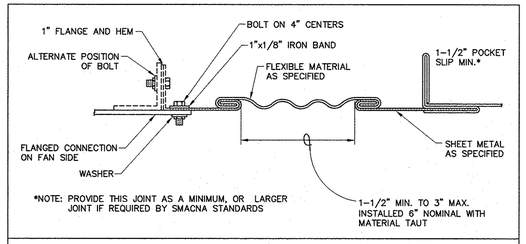

*NOTE: PROVIDE THIS JOINT AS A MINIMUM, OR LARGER JOINT IF REQUIRED BY SMACNA STANDARDS

RECTANGULAR FLEX CONNECTION DETAIL

N.T.S.

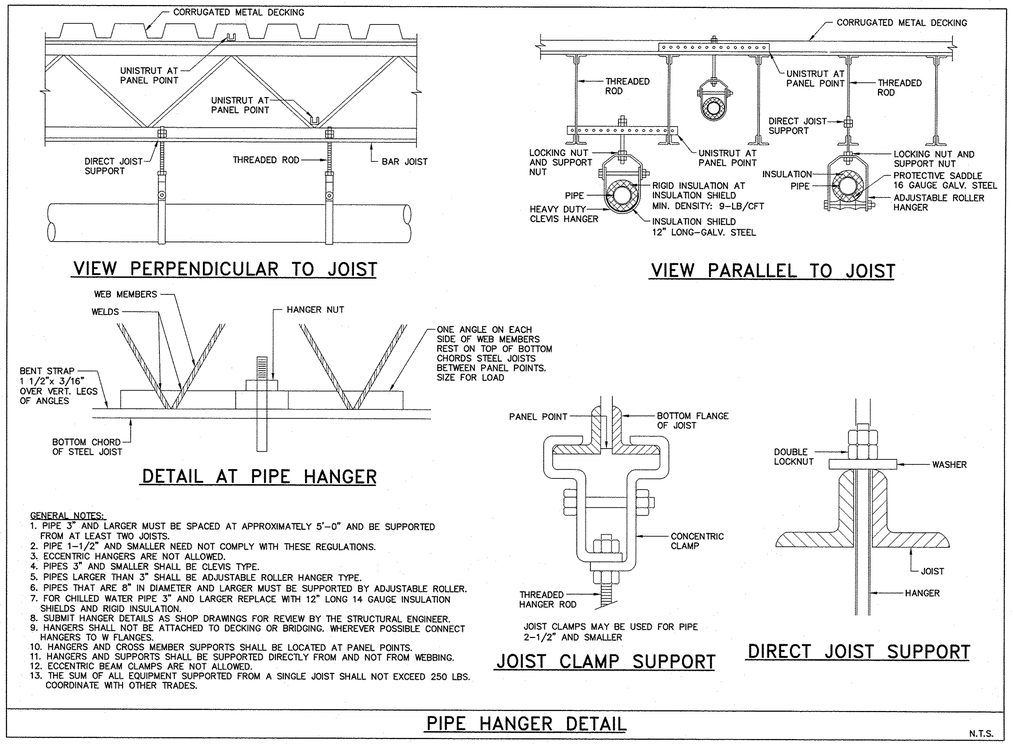

GENERAL NOTES:

1. PIPE 3" AND LARGER MUST BE SPACED AT APPROXIMATELY 5'-0" AND BE SUPPORTED FROM AT LEAST TWO JOISTS.
2. PIPE 1-1/2" AND SMALLER NEED NOT COMPLY WITH THESE REGULATIONS.
3. ECCENTRIC HANGERS ARE NOT ALLOWED.
4. PIPES 3" AND SMALLER SHALL BE CLEVIS TYPE.
5. PIPES LARGER THAN 3" SHALL BE ADJUSTABLE ROLLER HANGER TYPE.
6. PIPES THAT ARE 8" IN DIAMETER AND LARGER MUST BE SUPPORTED BY ADJUSTABLE ROLLER.
7. FOR CHILLED WATER PIPE 3" AND LARGER REPLACE WITH 12" LONG 14 GAUGE INSULATION SHIELDS AND RIGID INSULATION.
8. SUBMIT HANGER DETAILS AS SHOP DRAWINGS FOR REVIEW BY THE STRUCTURAL ENGINEER.
9. HANGERS SHALL NOT BE ATTACHED TO DECKING OR BRIDGING. WHEREVER POSSIBLE CONNECT HANGERS TO W FLANGES.
10. HANGERS AND CROSS MEMBER SUPPORTS SHALL BE LOCATED AT PANEL POINTS.
11. HANGERS AND SUPPORTS SHALL BE SUPPORTED DIRECTLY FROM AND NOT FROM WEBBING.
12. ECCENTRIC BEAM CLAMPS ARE NOT ALLOWED.
13. THE SUM OF ALL EQUIPMENT SUPPORTED FROM A SINGLE JOIST SHALL NOT EXCEED 250 LBS. COORDINATE WITH OTHER TRADES.

PIPE HANGER DETAIL

N.T.S.

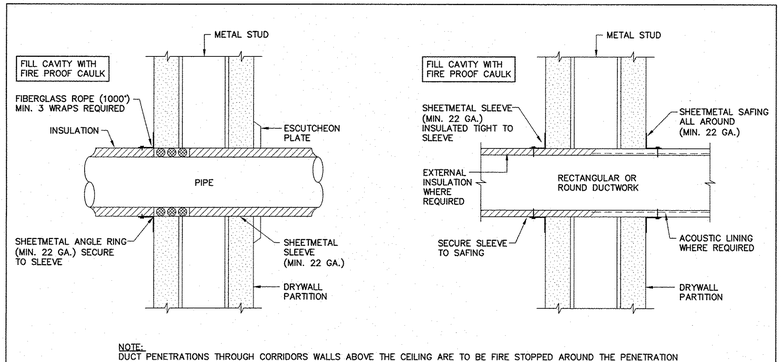

NOTE:
DUCT PENETRATIONS THROUGH CORRIDORS WALLS ABOVE THE CEILING ARE TO BE FIRE STOPPED AROUND THE PENETRATION

DUCT AND PIPE PENETRATION THRU NON-FIRE RATED WALL DETAIL

N.T.S.

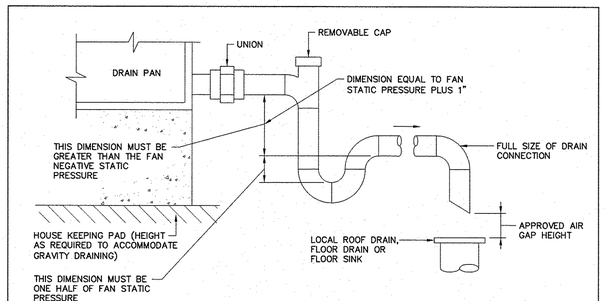

CONDENSATE DRAIN DETAIL

N.T.S.

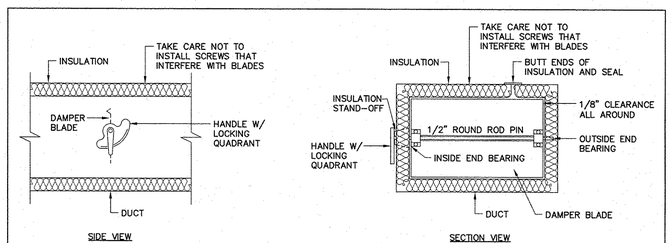

NOTES:

1. DAMPER SHALL BE SAME MATERIAL AS DUCT.
2. DAMPER GAUGES SHALL BE 2 GAUGES HEAVIER THAN DUCTWORK.
3. DELETE INSULATION STAND-OFF ON DUCTWORK WITHOUT EXTERIOR INSULATION.
4. DETAIL SHOWS RECTANGULAR DUCTWORK. DAMPER INSTALLATION SHALL BE SIMILAR FOR ROUND DUCT.

VOLUME DAMPER AND INSULATION DETAIL

N.T.S.

ISSUE FOR BID

980 Washington Street, Suite 325N
Dedham, Massachusetts 02026
800.446.5518 | www.woodardcurran.com

COMMITMENT & INTEGRITY DRIVE RESULTS

WOODARD & CURRAN

THIS DOCUMENT IS THE PROPERTY OF WOODARD & CURRAN INC., AND ITS CLIENT. REPRODUCTION OR MODIFICATION WITHOUT WRITTEN PERMISSION IS PROHIBITED.

REV	DESCRIPTION	DATE
B	ISSUE FOR BID	3/11/15
A	FOR MASSDEP REVIEW	07/18/14

DESIGNED BY: JF
DRAWN BY: JF
CHECKED BY: MJ
224802.21 - H-501.DWG

HVAC DETAILS 1

LOWELL REGIONAL WATER UTILITY
LOWELL, MASSACHUSETTS

WATER SYSTEM IMPROVEMENTS

JOB NO.: 224802.20
DATE: MARCH 2015
SCALE: AS NOTED
SHEET: 31 OF 51

H-501

24x36 SHEET
1:1

\\wc\shared\Projects\224802 Lowell MA - Water System Improvement PEF 2011\wip\Drawings\HVAC (WTP)\224802.21 - H-501.dwg, Mar 04, 2015 - 7:01am

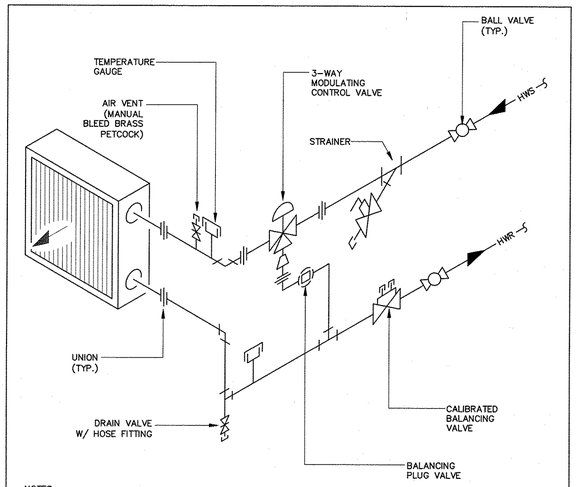

NOTES:

1. HOOK UP COIL COUNTERFLOW.
2. FOR ACCESS TO VALVES, STRAINERS, ETC. COMPLY WITH "ACCESS DOORS" IN SPECS. PROVIDE ACCESS DOOR IN SHEET METAL FOR CLEANING OF COIL SURFACES.
3. SIMILAR PIPING ARRANGEMENT FOR VARIABLE AIR VOLUME TERMINAL UNIT COILS.

VAV BOX HOT WATER HEATING COIL PIPING DETAIL

N.T.S.

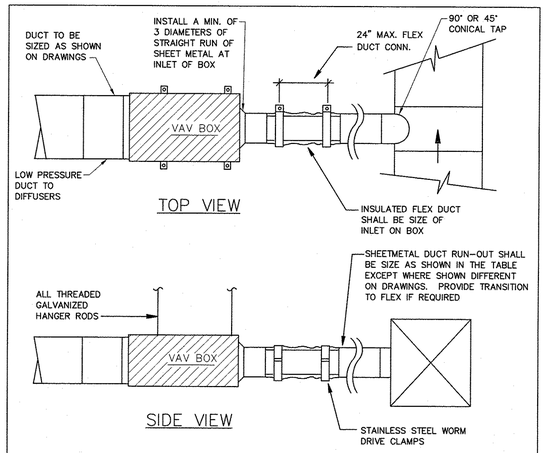

TERMINAL BOX BRANCH DUCT SCHEDULE					
CFM RANGE	0–400	0–800	0–1200	0–1500	0–2000
BOX SIZE	6"ø	8"ø	10"ø	12"ø	14"ø
DUCT SIZE	8"ø	10"ø	12"ø	12"ø	14"ø

TERMINAL BOX DETAIL

N.T.S.

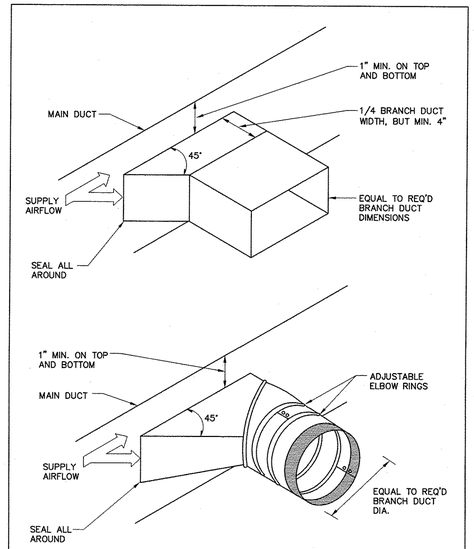

TYPICAL BRANCH TAKE-OFF FITTING DETAIL

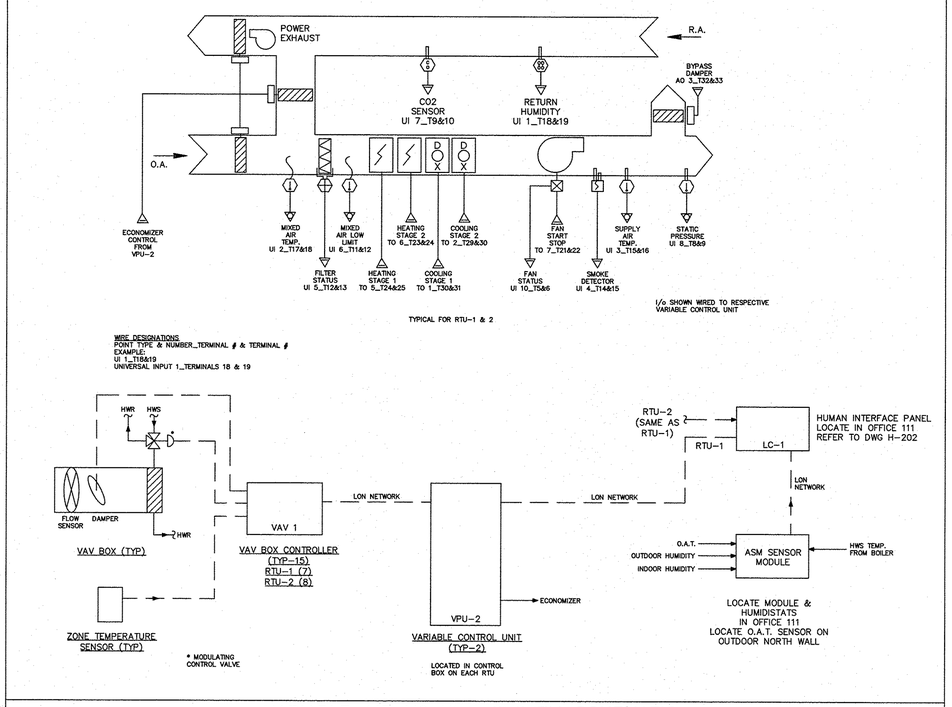

VARIABLE AIR VOLUME SYSTEM SCHEMATIC

N.T.S.

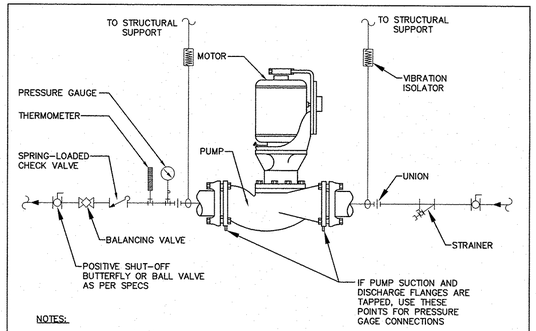

NOTES:

1. SUPPORT PUMP FROM PIPING ONLY. DO NOT SUPPORT PUMP FROM MOTOR.
2. PRESSURE GAUGES SHALL BE RATED FOR 150% OF WORKING PRESSURE.

IN-LINE CENTRIFUGAL PUMP DETAIL

N.T.S.

ISSUE FOR BID

980 Washington Street, Suite 325N
Dedham, Massachusetts 02026
800.446.5518 | www.woodardcurran.com
WOODARD & CURRAN
COMMITMENT & INTEGRITY DRIVE RESULTS

THIS DOCUMENT IS THE PROPERTY OF WOODARD & CURRAN INC. AND ITS CLIENT. REPRODUCTION OR MODIFICATION WITHOUT WRITTEN PERMISSION IS PROHIBITED.

REV	DESCRIPTION	DATE
A	FOR MASSDEP REVIEW	07/18/14
B	ISSUE FOR BID	3/11/15

DESIGNED BY: JF
DRAWN BY: JF
CHECKED BY: MJ
224802.21 - H-502.DWG

HVAC DETAILS 2

LOWELL REGIONAL WATER UTILITY
LOWELL, MASSACHUSETTS

WATER SYSTEM IMPROVEMENTS

JOB NO.: 224802.20
DATE: MARCH 2015
SCALE: AS NOTED
SHEET: 32 OF 51

H-502

24x36 SHEET
1:1

\\wc\Shared\Projects\224802 Lowell MA - Water System Improvement PEF 2011\wip\Drawings\HVAC (WTP)\224802.21 - H-502.dwg, Mar 04, 2015 - 7:02am

GENERAL

P1-## HOME RUN. ARROWS INDICATE NUMBER OF CIRCUITS, CROSS LINES INDICATE NUMBER OF WIRES, OTHER THAN TWO (2) PLUS BOND, WIRE SIZE NOT SHOWN INDICATES #12AWG MIN.
- INDICATES CIRCUIT NUMBER
- PANEL DESIGNATION
- WIRING IN RACEWAY
- WIRING IN RACEWAY CONCEALED UNDERGROUND OR UNDERSLAB, MINIMUM 3/4"C
- WIRING IN RACEWAY CONCEALED UNDERGROUND, MINIMUM 3/4"C
- 3/C #nn W/GND EquipNo-P — CONDUIT AND CABLE ID TAG
- CONDUIT TURNING UP
- CONDUIT TURNING DOWN
- CONDUIT STUB
- EY CONDUIT SEAL
- FLEXIBLE NON-METALLIC CONDUIT
- PANELBOARD
- CP — CONTROL PANEL
- ATC — AUTOMATIC TEMPERATURE CONTROL PANEL
- ISBP — INTRINSIC SAFETY BARRIER PANEL
- POWER COMPANY METER
- HS H/O/A — LOCAL SELECTOR SWITCH H/O/A – HAND/OFF/AUTO H/O/R – HAND/OFF/REMOTE L/O/R – LOCAL/OFF/REMOTE
- PUSHBUTTON STATION, WITH "EM" EMERGENCY
- J — JUNCTION BOX
- MD — MOTORIZED DAMPER
- T — THERMOSTAT
- R — RELAY
- BT — DOOR BELL/BUZZER AND TRANSFORMER – MTD CL UP 7'-0" AFF
- EQUIP# — EQUIPMENT TAGS
- X — KEYED NOTE TAG
- X — REVISION TRIANGLE
- BRACKET
- DX — KEYED DEMOLITION NOTE TAG

POWER

- NON-FUSED SAFETY SWITCH
- F — FUSED SAFETY SWITCH
- NON-FUSED DISCONNECT/MAGNETIC MOTOR STARTER
- M — MANUAL MOTOR SWITCH (MOTOR RATED SWITCH), TOGGLE OPERATED, SINGLE PHASE. 1 OR 2 POLE AS REQUIRED
- CB 100A — ENCLOSED CIRCUIT BREAKER W/AMPERE RATING
- M — ELECTRIC MOTOR, NUMBER INDICATES HORSEPOWER RATING, "F" INDICATES FRACTIONAL LESS THAN 1/20HP OR 100W
- T — TRANSFORMER
- P — POWER POLE
- DUPLEX RECEPTACLE, NEMA 5-20R – MTD CL UP 24" OR AS NOTED."WP" WEATHER PROOF, "G" PROTECTED BY GFCI RECEPTACLE OR BREAKER UPSTREAM, "H" MOUNTED 0'-6" BELOW CEILING, "TV" MOUNT 7'-6" UP
- DOUBLE DUPLEX RECEPTACLE, NEMA 5-20R – MTD CL UP 24" OR AS NOTED
- SINGLE RECEPTACLE, NEMA 5-20R – MTD CL UP 24" OR AS NOTED
- GFCI DUPLEX RECEPTACLE, NEMA 5-20R – MOUNTED CL UP 48" OR 6" ABOVE COUNTER
- DOUBLE DUPLEX GFCI RECEPTACLE, NEMA 5-20R – MOUNTED CL UP 48" OR 6" ABOVE COUNTER
- FLUSH FLOOR OUTLET, DUPLEX RECEPTACLE, NEMA 5-20R
- MULTI SERVICE FLUSH FLOOR BOX WITH DUPLEX RECEPTACLE AND PROVISIONS FOR DATA
- POWER RECEPTACLE, NEMA CONFIGURATION AS NOTED OR AS REQUIRED FOR EQUIPMENT SERVED.
- FLUSH CEILING MTD DEVICE BOXES, ONE W/ DUPLEX RCPT FOR PROJECTOR POWER AND ONE FOR DATA TO SERVE OH PROJECTOR. RUN ONE 1 1/2"C TO JBOX LOCATED AT FRONT OF ROOM FOR PROJECTOR CABLE PATHWAY. VERIFY FINAL LOCATION W/ OWNER PRIOR TO ROUGH IN.
- MULTI-OUTLET POWER STRIP, MOUNT 0'-6" ABOVE COUNTERTOP, RECEPTACLE SPACING AS NOTED.

MISCELLANEOUS

- DETAIL # / B 80.01 / SHEET # — SECTION CALL OUT
- DETAIL TITLE 1 X-0X — DETAIL CALL OUT

LIGHTING

- 2x4 FLUORESCENT FIXTURE
- Ab — ASSOCIATED CONTROL DEVICE; FIXTURE TYPE (SEE LIGHT FIXTURE SCHEDULE)
- 1x4 FLUORESCENT FIXTURE
- 2x2 FLUORESCENT FIXTURE
- FIXTURE WIRED TO UNSWITCHED NORMAL CIRCUIT
- FIXTURE WIRED TO UNSWITCHED EMERGENCY CIRCUIT
- FIXTURE WIRED TO SWITCHED EMERGENCY CIRCUIT
- DOWN LIGHT
- FLUORESCENT STRIP
- WALL MOUNTED FIXTURES
- ab — POLE MOUNTED SITE LIGHTING FIXTURE; FIXTURE TYPE (SEE LIGHT FIXTURE SCHEDULE)
- FLOOD LIGHT
- EXIT SIGN, CEILING MOUNTED. ARROW INDICATES EGRESS DIRECTION. SHADING INDICATES SIGN FACE. NUMERAL INDICATES BATTERY UNIT CONNECTED
- EXIT SIGN, WALL MOUNTED 7'-6" AFF OR 0'-6" ABOVE DOOR. SHADING INDICATES SIGN FACE. NUMERAL INDICATES BATTERY UNIT CONNECTED TO.
- BATT — DUAL HEAD EMERGENCY LIGHT BATTERY PACK WITH NUMBER OF HEADS AS INDICATED – WALL MOUNTED MTD 7'-6" AFF. NUMERAL INDICATES BATTERY ID NUMBER.
- TANDEM EMERGENCY LIGHT BATTERY PACK & EXIT SIGN – WALL MOUNTED MTD 7'-6" AFF OR 0,-6" ABOVE DOOR. NUMERAL INDICATES BATTERY ID NUMBER.
- REMOTE EMERGENCY LIGHTING HEAD – WALL MOUNTED MTD 7'-6" AFF. NUMERAL INDICATES BATTERY UNIT CONNECTED TO.
- S — SINGLE POLE TOGGLE SWITCH – MTD CL UP 4'-0" AFF
- S_2 — DOUBLE POLE TOGGLE SWITCH – MTD CL UP 4'-0" AFF
- S_3 — 3-WAY TOGGLE SWITCH – MTD CL UP 4'-0" AFF
- S_4 — 4-WAY TOGGLE SWITCH – MTD CL UP 4'-0" AFF
- S_M — WALL MOUNTED OCCUPANCY SENSOR – MTD CL UP 4'-0" AFF
- S_P — TOGGLE SWITCH WITH PILOT LIGHT – MTD CL UP 4'-0" AFF
- S_D — DIMMER SWITCH – MTD CL UP 4'-0" AFF
- S_{LV} — LOW VOLTAGE SWITCH – MTD CL UP 4'-0" AFF
- a — OCCUPANCY SENSOR a. INDICATES CONTROLLED FIXTURE
- PC — PHOTOCELL
- LC — LIGHTING CONTRACTOR
- MS — MOTION SENSOR

FIRE ALARM DIAGRAM SYMBOLS

- FACP — FIRE ALARM CONTROL PANEL
- FAA — FIRE ALARM ANNUNCIATOR
- FCPS — FIELD CHARGER POWER SUPPLY
- M — FIRE ALARM MASTER BOX
- K — KNOX BOX
- F — FIRE ALARM MANUAL PULL STATION – WALL MTD CL UP 4'-0"
- HL — FIRE ALARM AUDIBLE/VISIBLE NOTIFICATION APPLIANCE CANDELA (CD) POWER PER NFPA 72 OR AS NOTED – WALL MTD BOTTOM UP 80" AFF. "H" HORN, "V" VOICE.
- L — FIRE ALARM VISUAL NOTIFICATION APPLIANCE CANDELA (CD) POWER PER NFPA 72 OR AS NOTED – WALL MTD BOTTOM UP 80" AFF
- CEILING MOUNTED SMOKE DETECTOR
- CEILING MOUNTED HEAT DETECTOR
- DUCT SMOKE DETECTOR S=SUPPLY, R=RETURN
- FS — SPRINKLER SYSTEM FLOW SWITCH
- TS — SPRINKLER SYSTEM TAMPER SWITCH
- PS — SPRINKLER SYSTEM PRESSURE SWITCH
- DH — FIRE ALARM SYSTEM MAGNETIC DOOR HOLDER
- Z — MONITOR MODULE
- C — CONTROL MODULE
- R — RELAY MODULE

COMMUNICATIONS

- TEL — TELEPHONE BACKBOARD
- WX — PROVISIONS FOR TELEPHONE OUTLET. TWO-GANG WALL BOX WITH ONE 1"C STUB TO ABOVE ACCESSIBLE CEILING – MTD CL UP SAME AS ASSOCIATED RECEPTACLE W–INDICATES WALL MOUNTED AT 60" AFF P–INDICATES PAYPHONE MOUNTED AT 4'-0" AFF X–INDICATES NUMBER OF JACKS, SINGLE BOX
- PROVISIONS FOR DATA OUTLET. TWO-GANG WALL BOX WITH ONE 1"C STUB TO ABOVE ACCESSIBLE CEILING – MTD CL UP SAME AS ASSOCIATED RECEPTACLE. SUBSCRIPTS AS NOTED ABOVE.
- 2D2T — PROVISIONS FOR TELEPHONE & DATA OUTLET. TWO-GANG WALL BOX WITH ONE 1"C STUB TO ABOVE ACCESSIBLE CEILING – MTD CL UP SAME AS ASSOCIATED RECEPTACLE. SUBSCRIPTS AS NOTED ABOVE.
- PROVISIONS FOR SCADA SYSTEM OUTLET. TWO-GANG WALL BOX WITH ONE 1"C STUB TO ABOVE ACCESSIBLE CEILING – MTD CL UP SAME AS ASSOCIATED RECEPTACLE
- CEILING MOUNTED TELEPHONE SYSTEM OUTLET
- CEILING MOUNTED DATA SYSTEM OUTLET
- CEILING MOUNTED VOICE & DATA OUTLET
- FLUSH TELEPHONE FLOOR OUTLET
- FLUSH DATA FLOOR OUTLET
- FLUSH VOICE & DATA FLOOR OUTLET
- TV — TELEVISION COAXIAL OUTLET. MOUNTED UP SAME AS ASSOCIATED RECEPTACLE

SECURITY

- SEC — SECURITY PANEL
- DS — DOOR INTRUSION SWITCH
- DE — ELECTRIC DOOR STRIKE
- CR — CARD READER
- KP — KEY PAD
- MOTION DETECTOR
- CAM — SECURITY CAMERA PTZ = PAN/TILT/ZOOM

INTERCOM & PAGING SYSTEM

- S — CEILING MOUNTED SPEAKER
- PA — PAGING SYSTEM CONTROL PANEL
- HS — PAGING SYSTEM HANDSET

INSTRUMENTATION

- LS XX — FIELD MOUNTED INSTRUMENT; INSTRUMENT IDENTIFICATION TYPE; INSTRUMENT LOOP #
- FS XX — VENDER SUPPLIED INSTRUMENT

INSTRUMENT IDENTIFIER:

AE	ANALYSIS ELEMENT
AIT	ANALYSIS INDICATING TRANSMITTER
AT	ANALYSIS TRANSMITTER
DPS	DIFFERENTIAL PRESSURE SWITCH
FCV	FLOW CONTROL VALVE
FE	FLOW ELEMENT
FIT	FLOW INDICATING TRANSMITTER
FT	FLOW TRANSMITTER
FS	FLOW SWITCH
LE	LEVEL ELEMENT
LIT	LEVEL INDICATING TRANSMITTER
LT	LEVEL TRANSMITTER
LS	LEVEL SWITCH
LSH	LEVEL SWITCH HIGH
LSL	LEVEL SWITCH LOW
MOV	MOTOR OPERATED VALVE
PE	PRESSURE ELEMENT
PIT	PRESSURE INDICATING TRANSMITTER
PT	PRESSURE TRANSMITTER
PS	PRESSURE SWITCH
SV	SOLENOID VALVE
TE	TEMPERATURE ELEMENT
TIT	TEMPERATURE INDICATING TRANSMITTER
TT	TEMPERATURE TRANSMITTER
ZS	PROXIMITY SWITCH

MISC TERMINALS

- ARROW, SMALL
- ARROW, LARGE
- ARROW, TRIANGULAR
- CONTINUE, SMALL
- CONTINUE, LARGE
- DOT, SMALL
- DOT, MEDIUM
- DOT, LARGE
- POLARITY SQUARE
- SCREW TERMINAL
- TERMINAL POINT, SMALL
- TERMINAL POINT, LARGE
- TERMINAL POINT, SQUARE
- SHIELD
- SHIELD W/TERMINAL POINT

ONE-LINE DIAGRAM SYMBOLS

- 52 GCB1 / CB 800A E.O — HV VOLTAGE DRAWOUT TYPE POWER CIRCUIT BREAKER ELECTRICALLY OPERATED
- 52 — MV VOLTAGE DRAWOUT TYPE POWER CIRCUIT BREAKER WITH MANUAL CONTROL SWITCH
- AT AF EO — LOW VOLTAGE CIRCUIT BREAKER AF – AMP FRAME AT – AMP TRIP EO – ELECTRICALLY OPERATED
- ST — ST – SHUNT TRIP GF – GROUND FAULT EO – ELECTRICALLY OPERATED
- DISCONNECT, ISOLATION OR SAFETY SWITCH
- FUSED DISCONNECT SWITCH
- MAGNETIC MOTOR STARTER. NUMERAL INDICATES NEMA SIZE FVNR UNLESS OTHERWISE NOTED. FVR – FULL VOLTAGE REVERSING RVAT – REDUCING VOLTAGE AUTO TRANSFORMER 2S – TWO SPEED YD – WYE DELTA REDUCED VOLTAGE STARTER
- CAPACITOR
- VFD 11 — VFD = VARIABLE FREQUENCY DRIVE SS = SOLID STATE STARTER DC = DC VARIABLE DRIVE NUMERAL INDICATES AMP RATING
- OA — POWER TRANSFORMER OA – LIQUID TYPE SELF COOLED AA – DRY TYPE SELF COOLED FA – FAN COOLED; CONNECTION
- 2 480/120 — POTENTIAL TRANSFORMER RATIO NUMBER REQUIRED
- 2 600/5 — CURRENT TRANSFORMER RATIO PHASE
- 5 — MOTOR, NUMERAL INDICATES HORSEPOWER
- X — GENERAL LOAD, NUMERAL INDICATES LOAD IN KVA
- GENERATOR
- N E L ATS — ATS – AUTOMATIC TRANSFER SWITCH MTS – MANUAL TRANSFER SWITCH
- A — METER A – AMMETER V – VOLTMETER W – WATTMETER KWH – KILOWATT HOUR KVAR – KILOVAR METER VAR – VAR METER HZ – FREQUENCY METER PF – POWER FACTOR METER
- 3 — LINE OR LOAD REACTOR NUMERAL INDICATES % IMPEDENCE
- DPM — DIGITAL POWER MONITOR
- AS — METER TRANSFER SWITCH AS – AMMETER SWITCH VS – VOLTMETER SWITCH
- SPD — SPD = SURGE PROTECTION DEVICE ENDN = ETHERNET TO DEVICENET LINKING DEVICE DPS = DEVICENET POWER SUPPLY
- MEDIUM VOLTAGE CABLE TERMINATION
- DRAWOUT DEVICE
- LA — LIGHTNING ARRESTOR
- K — KEY INTERLOCK

GROUNDING

- G — DENOTES BARE COPPER GROUND CABLE. (SIZE 4/0 UNLESS OTHERWISE NOTED)
- DENOTES 3/4ø X 10'-0" LONG GROUND ROD. (10'-0" MINIMUM LENGTH)
- DENOTES CABLE TO CABLE CADWELD EXOTHERMIC CONNECTION OR APPROVED EQUAL.
- DENOTED CADWELL EXOTHERMIC CABLE CONNECTION TO BOLT CONNECTION
- DENOTES GROUND TERMINAL CONNECTION ON EQUIPMENT
- DENOTES PIGTAIL RISER UP THROUGH GRAVEL FOR CONNECTION TO EQUIPMENT. PROVIDE MINIMUM OF 12' AND COIL FOR CONNECTION AT A LATER DATE.
- GROUND

CONTROL DIAGRAM SYMBOLS

NOTE: ALL CONTROL SYMBOLS ARE DRAWN ASSUMING DE-ENERGIZED CIRCUITS, EMPTY TANKS, UNPRESSURIZED LINES, ETC.

OPEN ON INCREASE / CLOSE ON INCREASE

- PRESSURE SWITCH
- LEVEL SWITCH
- FLOW SWITCH
- TEMPERATURE SWITCH

NORMALLY CLOSED / NORMALLY OPEN

- PUSH BUTTON
- INSTANTANEOUS CONTACT
- TIMED CLOSE CONTACT
- TIMED OPEN CONTACT
- LIMIT SWITCH
- H A XOO OOX — SELECTOR SWITCH: QUANTITY OF ARROWS INDICATES NUMBER OF POSITIONS. XOO INDICATES UPPER CONTACT CLOSED IN LEFT POSITION AND OPEN IN CENTER AND RIGHT POSITIONS
- INTERNAL WIRING
- FIELD WIRING
- RELAY COIL

ABBREVIATIONS

A,AMP	AMPERES
AC	ALTERNATING CURRENT
AFF	ABOVE FINISHED FLOOR
AFG	ABOVE FINISHED GRADE
AHJ	AUTHORITY HAVING JURISDICTION
AIC	AMPERE INTERRUPT CAPACITY
AWG	AMERICAN WIRE GAUGE
BFG	BELOW FINISHED GRADE
CATV	CABLE TELEVISION
CB	CIRCUIT BREAKER
CCTV	CLOSED CIRCUIT TELEVISION
CL	CENTER LINE
CKT	CIRCUIT
CP	CONTROL PANEL
CPT	CONTROL POWER TRANSFORMER
CT	CURRENT TRANSFORMER
CU	COPPER
E.C.	ELECTRICAL CONTRACTOR
EMT	ELECTRIC METALLIC TUBING
FAA	FIRE ALARM ANNUNCIATOR
FACP	FIRE ALARM CONTROL PANEL
FBO	FURNISHED BY OTHERS
FWE	FURNISHED WITH EQUIPMENT
G.C.	GENERAL CONTRACTOR
GEN	GENERATOR
GFCI	GROUND FAULT CIRCUIT INTERRUPTER
G,GND	GROUND
HP	HORSEPOWER
HZ	FREQUENCY IN CYCLES/SECOND
IG	ISOLATED GROUND
IMT	INTERMEDIATE METALLIC CONDUIT
JBOX	JUNCTION BOX
K	KILO
KCMIL	1000 CIRCULAR MILS
KVA	KILOVOLT AMPERE
KVAR	KILOVOLT AMPERE REACTIVE
KW	KILOWATT
KWH	KILOWATT HOUR
MCC	MOTOR CONTROL CENTER
MCB	MAIN CIRCUIT BREAKER
MFG	MANUFACTURER
MH	MANHOLE
MLO	MAIN LUGS ONLY
MTD	MOUNTED
MTR	MOTOR
MV	MEDIUM VOLTAGE
NC	NORMALLY CLOSED
NEC	NATIONAL ELECTRIC CODE
NEUT	NEUTRAL
NO	NORMALLY OPEN
OL	OVERLOAD ELEMENT
PF	POWER FACTOR
PH	PHASE
PRI	PRIMARY
PT	POTENTIAL TRANSFORMER
PVC	POLYVINYL CHLORIDE
RGS	RIGID STEEL CONDUIT
RTD	RESISTANCE TEMPERATURE DETECTOR
SEC	SECONDARY
SS	STAINLESS STEEL
SV	SOLENOID VALVE
TEMP	TEMPERATURE
TVSS	TRANSIENT VOLTAGE SURGE SUPPRESSOR
TYP	TYPICAL
UE	UNDERGROUND ELECTRIC
UG	UNDERGROUND
UPS	UNINTERRUPTED POWER SUPPLY
V	VOLTS
VA	VOLT-AMPERES
VAR	VOLT-AMPERE REACTIVE
W	WATT
WM	WATT METER
WP	WEATHER PROOF
XFMR	TRANSFORMER
XP	EXPLOSION PROOF

WOODARD & CURRAN
980 Washington Street, Suite 325N
Dedham, Massachusetts 02026
800.446.5518 | www.woodardcurran.com
COMMITMENT & INTEGRITY DRIVE RESULTS

THIS DOCUMENT IS THE PROPERTY OF WOODARD & CURRAN, INC. AND ITS CLIENT. REPRODUCTION OR MODIFICATION WITHOUT WRITTEN PERMISSION IS PROHIBITED.

REV	DESCRIPTION	DATE
B	ISSUE FOR BID	3/11/15
A	FOR MASSDEP REVIEW	07/18/14

DESIGNED BY: SEH/GW | CHECKED BY: AJF
DRAWN BY: SEH/PO | 224802 E-001.DWG

ELECTRICAL LEGEND

LOWELL REGIONAL WATER UTILITY
LOWELL, MASSACHUSETTS

WATER SYSTEM IMPROVEMENTS

JOB NO.: 224802.20
DATE: MARCH 2015
SCALE: AS NOTED
SHEET: 33 OF 51

ISSUE FOR BID

E-001

24x36 SHEET
1:1

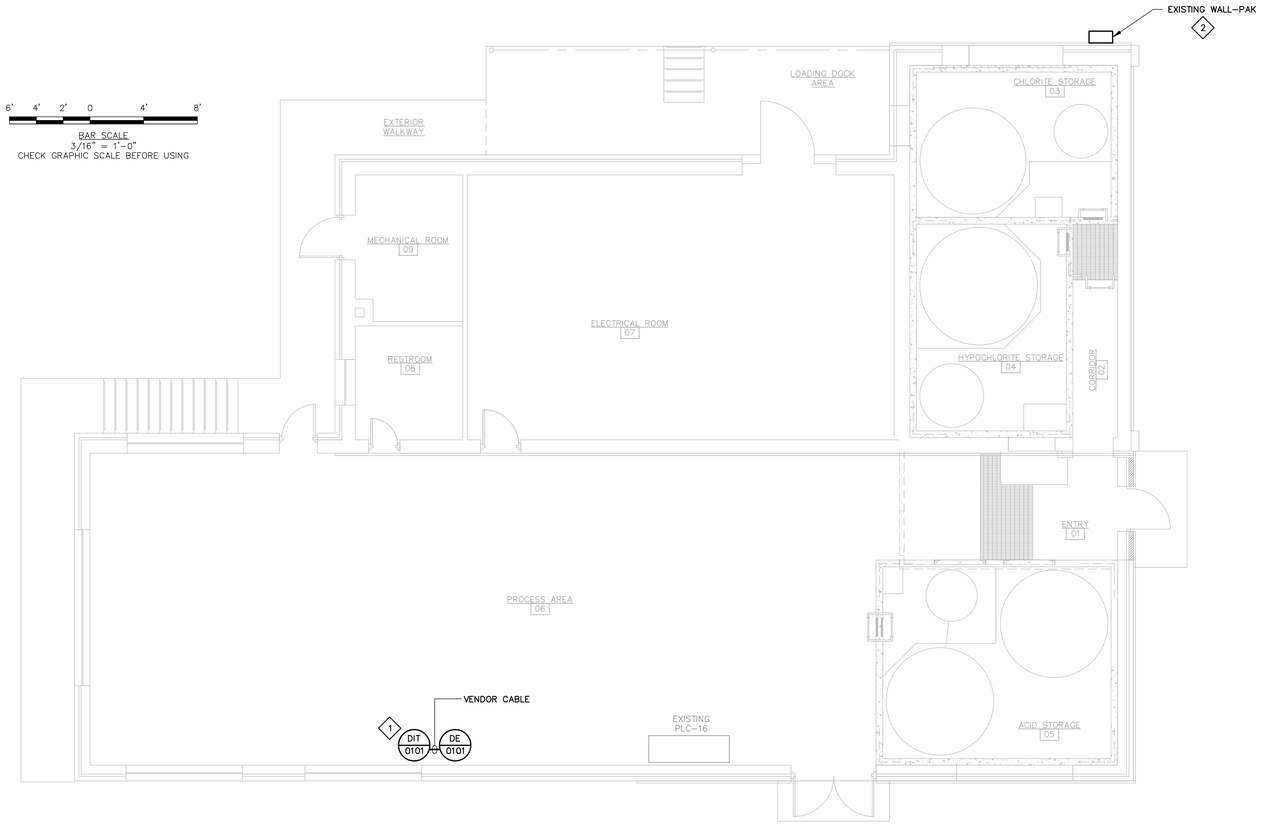

RAW WATER PUMP STATION FLOOR PLAN

SCALE: 3/16" = 1'-0"

GENERAL NOTES:

1. ALL EQUIPMENT SHOWN IN BOLD DESIGNATION SHALL BE CONSIDERED NEW. ALL EQUIPMENT SHOWN IN LIGHT DESIGNATION SHALL BE CONSIDERED EXISTING.

KEYED NOTES:

1. DISCONNECT THE POWER AND CONTROL WIRING TO THE EXISTING TURBIDIMETER, MOUNT NEW POWER SUPPLY/TRANSMITTER(DIT) AND RE-CONNECT EXISTING POWER/CONTROL WIRES TO NEW POWER SUPPLY.
2. DISCONNECT AND REMOVE EXISTING WALL-PAK AND ASSOCIATED CONDUIT IN PREPARATION FOR BUILDING SURFACE RESTORATION. UPON COMPLETION OF RESTORATION, RE-INSTALL LIGHT FIXTURE.
3. NEW, LED FLOODLIGHT TO BE MOUNTED ON FACE OF BUILDING AND EXTEND OUT 6" FROM FACE TO ILLUMINATE BUILDING SIGN. PROVIDE 2@12&1@12G-3/4"C AND A NEW, 20A-1P CIRCUIT BREAKER IN EXISTING LIGHTING CONTROL PANEL IN ELECTRICAL ROOM FOR EACH OF THE (3) NEW, LIGHT FIXTURES. PROVIDE TENON OR SLIP-FITTING, MOUNTING BRACKETS SO FIXTURE FACES DOWN AND PROVIDES ILLUMINATION FOR SIGN AND WALL.
4. DISCONNECT AND REMOVE THE EXISTING SIGNAL POLE CONDUITS IN PREPARATION FOR PAINTING. UPON COMPLETION OF PAINTING, RE-INSTALL CONDUITS TO ORIGINAL PLACEMENT OF SIGNAL POLE.

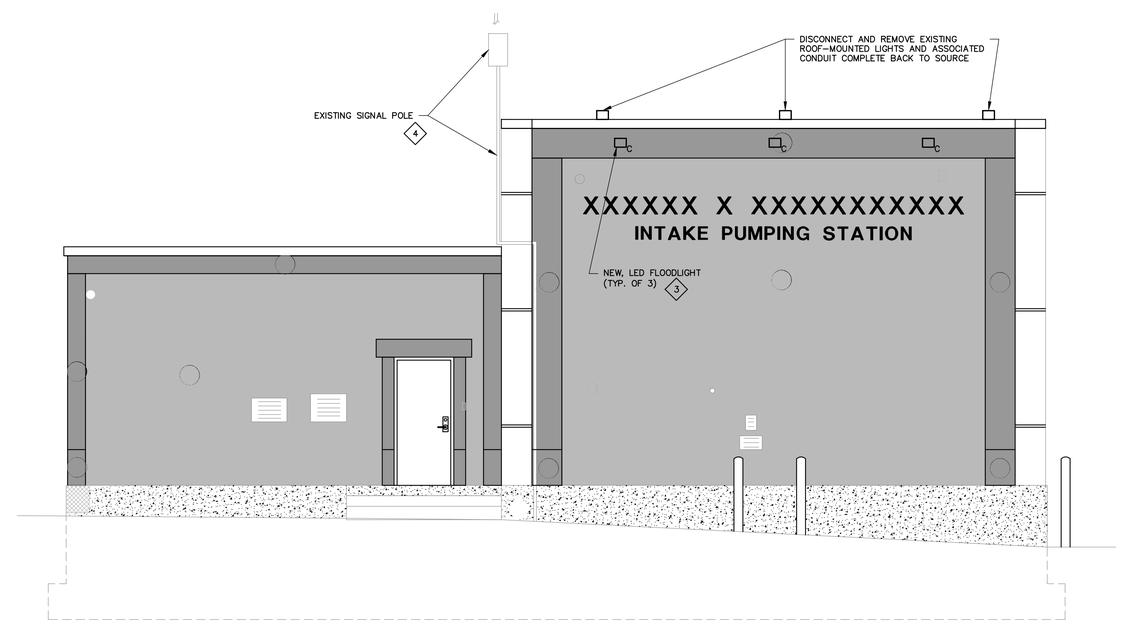

6' 4' 2' 0 4' 8'
BAR SCALE
1/4" = 1'-0"
CHECK GRAPHIC SCALE BEFORE USING

EAST ELEVATION LIGHTING

SCALE: 1/4" = 1'-0"

ISSUE FOR BID

900 Washington Street, Suite 325N
Dedham, Massachusetts 02026
800.446.5518 | www.woodardcurran.com

WOODARD & CURRAN

COMMITMENT & INTEGRITY DRIVE RESULTS

THIS DOCUMENT IS THE PROPERTY OF WOODARD & CURRAN INC., AND ITS CLIENT. REPRODUCTION OR MODIFICATION WITHOUT WRITTEN PERMISSION IS PROHIBITED.

COMMONWEALTH OF MASSACHUSETTS
STEPHEN K. BREEN
FITZPATRICK
ELECTRICAL
NO. 50761
REGISTERED PROFESSIONAL ENGINEER

REV	DESCRIPTION	DATE
B	ISSUE FOR BID	3/11/15
A	FOR MASSEP REVIEW	07/18/14

DESIGNED BY: SEH/GW CHECKED BY: AJF
DRAWN BY: SEH/PO 224802 E-101.DWG

RAW WATER PUMP STATION
FLOOR PLAN & EXTERIOR
LIGHTING

LOWELL REGIONAL WATER UTILITY
LOWELL, MASSACHUSETTS

WATER SYSTEM IMPROVEMENTS

JOB NO.:224802.20
DATE: MARCH 2015
SCALE: AS NOTED
SHEET: 34 OF 51

E-101

\\wc\shared\Projects\224802 Lowell MA - Water System Improvement PEF 2011\wip\Drawings\Electrical\224802 E-101.dwg, Mar 02, 2015 - 1:57pm

24x36 SHEET
1:1

GENERAL NOTES:

1. ITEMS SHOWN WITH LIGHT DESIGNATION INDICATE EXISTING ITEMS TO REMAIM. ITEMS SHOWN WITH BOLD DESIGNATION INDICATE NEW OR AFFECTED ITEMS UNLESS NOTED OTHERWISE.

KEYED NOTES:

1. REFER TO SHEET E-213 FOR FLOW CONTROL VAULT ELECTRICAL PLANS.
2. REFER TO SHEET E-214 GAC FILTER ROOM ELECTRICAL PLANS.
3. REFER TO SHEET E-215 FOR SAND MEDIA FILTER ROOM ELECTRICAL PLANS.
4. REFER TO SHEET E-216 FOR DUAL MEDIA FILTER ROOM ELECTRICAL PLANS.
5. REFER TO SHEET E-211 FOR 10MGD PLANT ELECTRICAL PLANS.
6. REFER TO SHEET E-212 FOR 20MGD PLANT ELECTRICAL PLANS.
7. GENERAL LOCATION OF VALVE CONTROL PANEL, REFERENCE SHEET E-213 FOR FURTHER REQUIREMENTS.
8. ALL WORK ASSOCIATED WITH THE VERTICAL WHEELCHAIR LIFT IS SRF INELIGIBLE.

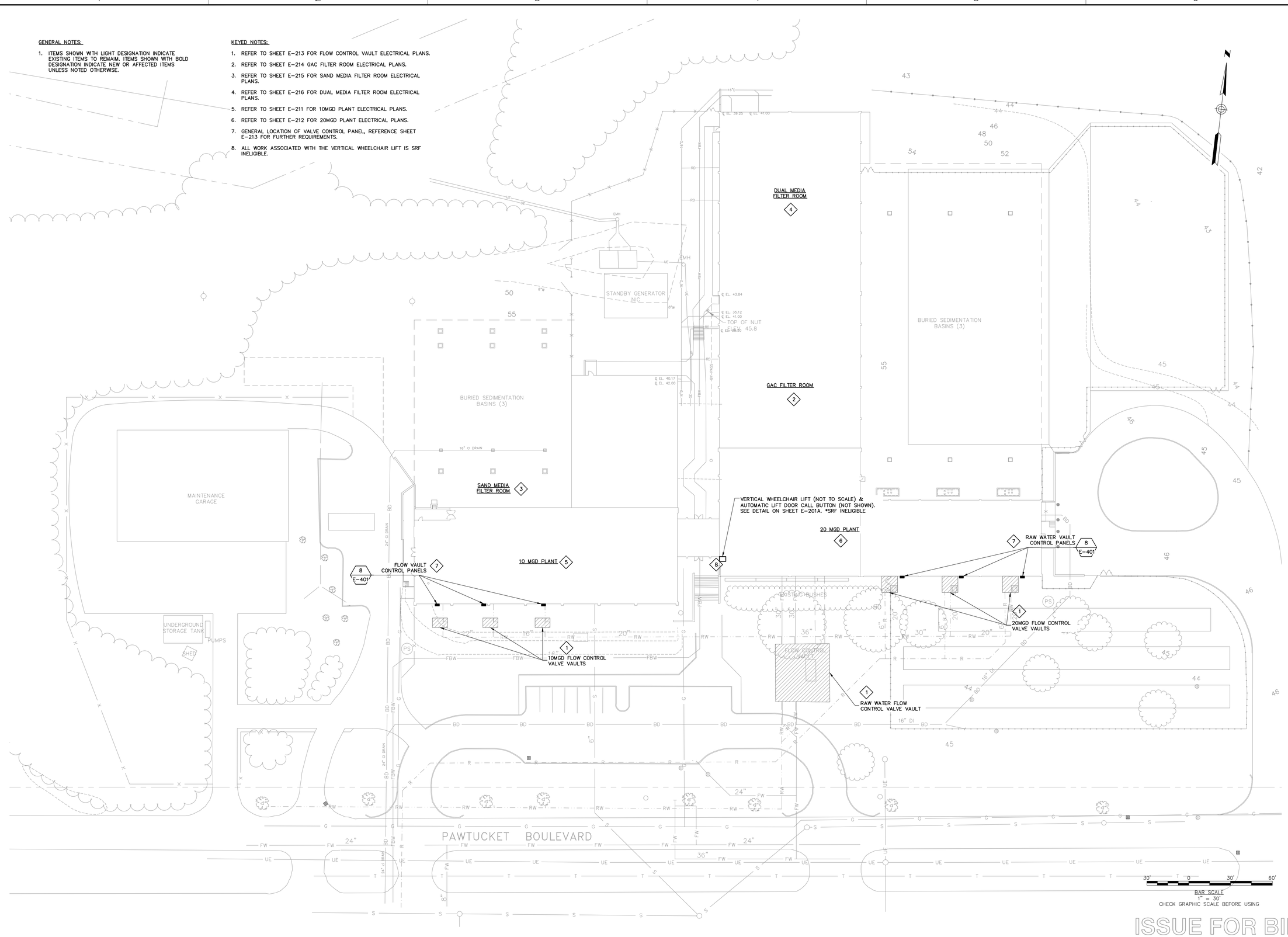

ISSUE FOR BID

980 Washington Street, Suite 325N
Dedham, Massachusetts 02026
800.446.5518 | www.woodardcurran.com
WOODARD & CURRAN
COMMITMENT & INTEGRITY DRIVE RESULTS

THIS DOCUMENT IS THE PROPERTY OF WOODARD & CURRAN INC., AND ITS CLIENT. REPRODUCTION OR MODIFICATION WITHOUT WRITTEN PERMISSION IS PROHIBITED.

COMMONWEALTH OF MASSACHUSETTS
SEAN M. SIBREY
FITZPATRICK
ELECTRICAL
NO. 50761
Apr. 17, 2015
REGISTERED PROFESSIONAL ENGINEER

REV	DESCRIPTION	DATE
B	ISSUE FOR BID	3/11/15
A	FOR MASSDEP REVIEW	07/18/14

DESIGNED BY: SEH/GW CHECKED BY: AJF
DRAWN BY: SEH/RO 224802 E-201.DWG

WATER FILTRATION PLANT ELECTRICAL SITE PLAN

LOWELL REGIONAL WATER UTILITY
LOWELL, MASSACHUSETTS

WATER SYSTEM IMPROVEMENTS

JOB NO.:224802.20
DATE: MARCH 2015
SCALE: AS NOTED
SHEET: 35 OF 51

E-201

\\wc\shared\Projects\224802 Lowell MA - Water System Improvement PEF 2011\Wip\Drawings\Electrical\224802 E-201.dwg, Mar 02, 2015 - 1:57pm

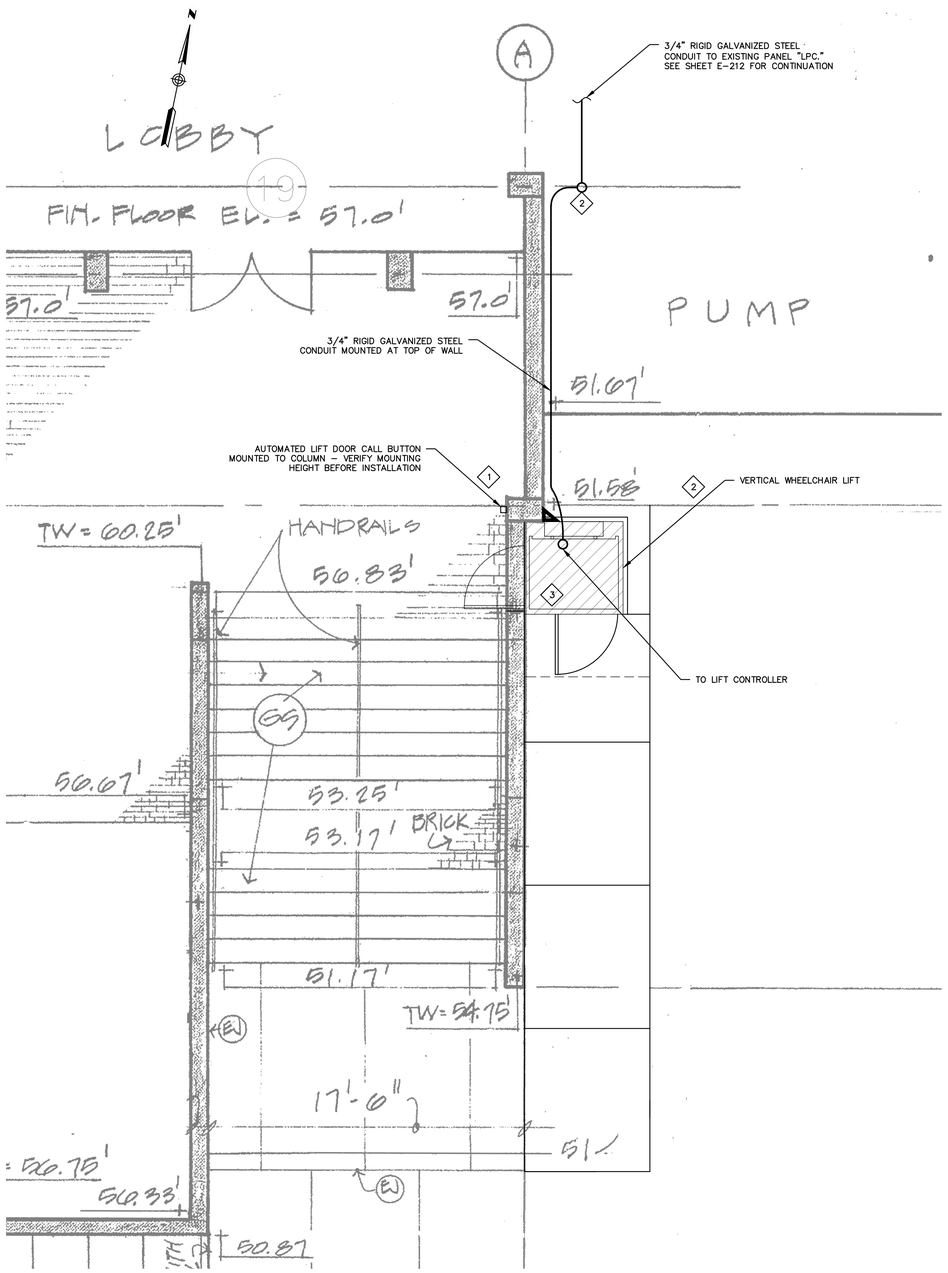

PLAN VIEW

SCALE: 1/4" = 1'-0"

6' 4' 2' 0 4' 8'

BAR SCALE
1/4" = 1'-0"
CHECK GRAPHIC SCALE BEFORE USING

GENERAL NOTES:

1. ALL EQUIPMENT SHOWN IN BOLD DESIGNATION SHALL BE CONSIDERED NEW. ALL EQUIPMENT SHOWN IN LIGHT DESIGNATION SHALL BE CONSIDERED EXISTING.

KEYED NOTES:

1. PROVIDE CONTROL WIRING BETWEEN THE VERTICAL WHEELCHAIR LIFT CALL BUTTON AND LIFT CONTROLLER PER MANUFACTURER'S REQUIREMENTS. CALL BUTTON AND LIFT ENCLOSURE FURNISHED BY MANUFACTURER. ELECTRICAL CONTRACTOR TO PROVIDE 3/4" RIGID GALVANIZED STEEL CONDUIT FOR RACEWAY WIRING BETWEEN CALL BOX AND LIFT.
2. PROVIDE 2#12&1#12G-3/4"C FROM EXISTING PANEL "LPC," SHOWN ON SHEET E-212, TO VERTICAL WHEELCHAIR LIFT CONTROLLER AND PROVIDE NEW, 20A-1P CIRCUIT BREAKER IN PANEL. CONDUIT SHALL PENETRATE INTO BUILDING ABOVE WINDOWS.
3. THE VERTICAL WHEELCHAIR LIFT IS SRF INELIGIBLE.

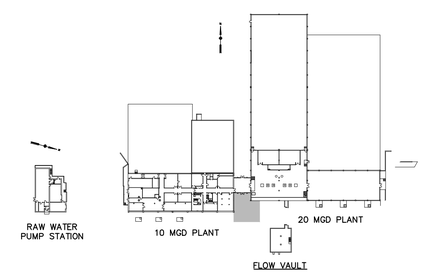

KEY PLAN

N.T.S.

ISSUE FOR BID

WOODARD & CURRAN
980 Washington Street, Suite 325N
Dedham, Massachusetts 02026
800.446.5518 | www.woodardcurran.com

COMMITMENT & INTEGRITY DRIVE RESULTS

THIS DOCUMENT IS THE PROPERTY OF WOODARD & CURRAN INC., AND ITS CLIENT. REPRODUCTION OR MODIFICATION WITHOUT WRITTEN PERMISSION IS PROHIBITED.

COMMONWEALTH OF MASSACHUSETTS
ALBERT J. FITZPATRICK
ELECTRICAL
NO. 50761
REGISTERED PROFESSIONAL ENGINEER
Apr. 17, 2015

REV	DESCRIPTION	DATE
B	ISSUE FOR BID	3/11/15
A	FOR MASSDEP REVIEW	07/18/14

DESIGNED BY: SEH/GW CHECKED BY: AJF
DRAWN BY: SEH/PO 224802 E-201A.DWG

VERTICAL WHEELCHAIR LIFT
DETAILS (SRF INELIGIBLE)

LOWELL REGIONAL WATER UTILITY
LOWELL, MASSACHUSETTS

WATER SYSTEM IMPROVEMENTS

JOB NO.: 224802.20
DATE: MARCH 2015
SCALE: AS NOTED
SHEET: 36 OF 51

E-201A

\\wc\shared\Projects\224802 Lowell MA - Water System Improvement PEF 2011\wip\Drawings\Electrical\224802 E-201A.dwg, Mar 02, 2015 - 1:57pm

24x36 SHEET
1:1

KEYED NOTES:

1. PROVIDE NEW 30A, 3POLE CIRCUIT BREAKER WITHIN MCC-3 FOR NEW UPS SYSTEM.
2. REFERENCE SHEET E-211 FOR LOCATION OF EXISTING 'MCC-3', TRANSFORMER T1, MAINTENANCE UPS BYPASS PANEL, UPS-1, AND PANEL 'UPS-1'. ALL NEW CIRCUIT BREAKERS SHALL MATCH THE AIC RATING OF THE EXISTING BREAKERS IN THE MCC-3.
3. REFERENCE SHEET E-212 FOR PANEL "UPS-2" LOCATION.
4. REMOVE THE EXISTING 80A, 3POLE CIRCUIT BREAKER (FOR EXISTING RTU-2) AND REPLACE WITH A NEW 70A, 3POLE HACR TYPE CIRCUIT BREAKER TO FEED NEW RTU-2.
5. REMOVE THE EXISTING 15A, 3 POLE CIRCUIT BREAKER FOR THE HOIST AND INSTALL A NEW 60A, 3 POLE CIRCUIT BREAKER AS SHOWN. DISCONNECT THE EXISTING HOIST CIRCUIT FROM THE MCC AND EXTEND CIRCUIT TO PANEL HP-1 WITH (3) #10AWG & (1) #10GND IN 3/4"C.
6. REPLACE THE EXISTING 50A, 3POLE CIRCUIT BREAKER FOR EXISTING RTU-1 AND REPLACE WITH NEW HACR TYPE, AS SHOWN, TO FEED NEW RTU-1.

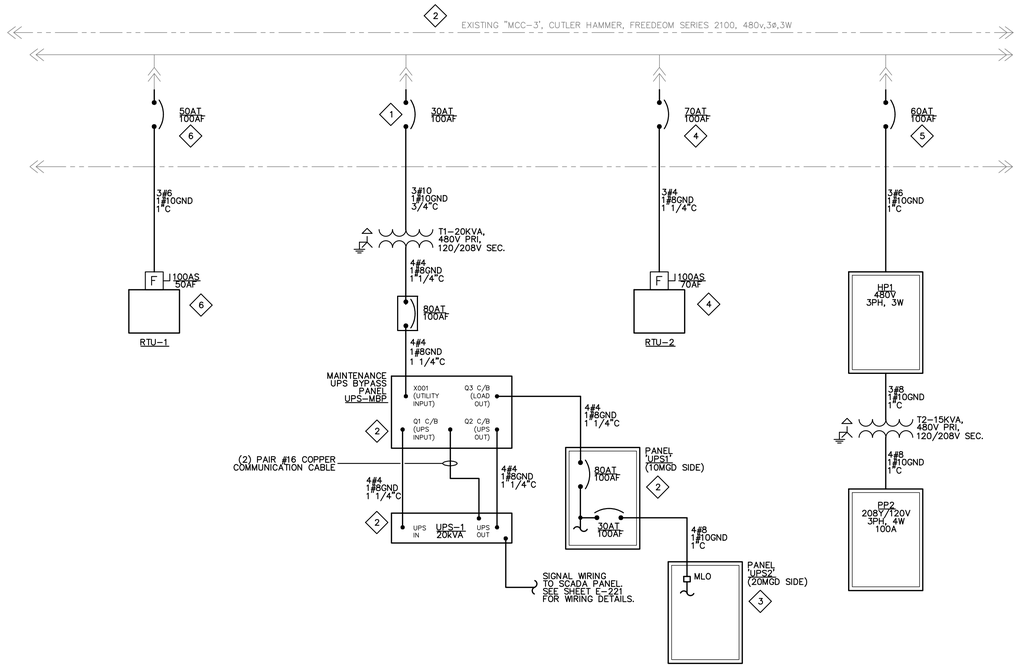

PARTIAL ONE-LINE DIAGRAM

DIRECTORY	BRKR	POLE	CKT #	KVA	KVA LOADS A	B	C	KVA	CKT #	POLE	BRKR	DIRECTORY
VAV BOXES	20	1	1	0.80	1.60			0.80	2	1	20	VAV BOXES
VAV BOXES	20	1	3	1.00		1.60		0.60	4	1	20	VAV BOXES
FLOW CONTROL VAULT PANEL	20	1	5	0.80			1.50	0.70	6	1	25	SAMPLE PUMP SP-2601
FLOW CONTROL VAULT PANEL	20	1	7	0.80	1.50			0.70	8	1	25	SAMPLE PUMP SP-2401
FLOW CONTROL VAULT PANEL	20	1	9	0.80		1.30		0.50	10	1	20	ATC CONTROL PANEL
FLOW CONTROL TRANSMITTER	20	1	11	0.20			0.20		12	1	20	SPARE
FLOW CONTROL TRANSMITTER	20	1	13	0.20	0.20				14	1	20	SPARE
FLOW CONTROL TRANSMITTER	20	1	15	0.20		0.20			16	1	20	SPARE
SPARE	20	1	17				0.00		18	1	20	SPARE
SPARE	20	1	19		0.00				20	1	20	SPARE
SPACE			21			0.00			22			SPACE
SPACE			23				0.00		24			SPACE
SPACE			25		0.00				26			SPACE
SPACE			27			0.00			28			SPACE
SPACE			29				0.00		30			SPACE
				SUBTOTAL	3.30	3.10	1.70	SUBTOTAL				

VOLTAGE:	120/208	TOTAL kVA	8.10	PANEL NAME:	PP2
MAIN BREAKER:	50	TOTAL AMPS	23	LOCATION:	STORAGE ROOM 114
BUSES:	100			MOUNTING:	SURFACE
PH & WIRES:	3PH 4W			AIC RATING:	10 kAIC
NOTES: PANEL LOCATED ON 10MGD SIDE OF PLANT					

'PP2'
PANEL SCHEDULE

DIRECTORY	BRKR	POLE	CKT #	KVA	KVA LOADS A	B	C	KVA	CKT #	POLE	BRKR	DIRECTORY
RCPTS - OFFICE 111 (2)	20	1	1	0.80	1.30			0.50	2	1	20	PLC2 - UTILITY RM 115
RCPTS - OFFICE 111 (2)	20	1	3	0.80		1.30		0.50	4	1	20	PLC1 - RM 125
RCPTS - OFFICE 110 (2)	20	1	5	0.40			0.80	0.40	6	1	20	RCPTS - RM 125 (2)
MIS SWITCH - OFFICE 110	20	1	7	0.50	0.90			0.40	8	1	20	RCPTS - RM 125 (2)
RCPTS - CTRL RM 124 (2)	20	1	9	0.80		1.20		0.40	10	1	20	RCPT - LAB 102
RCPTS - CTRL RM 124 (2)	20	1	11	0.80			0.80		12	1	20	SPARE
SPARE	20	1	13		0.00				14	1	20	SPARE
SPARE	20	1	15			0.00			16	1	20	SPARE
SPARE	20	1	17				0.00		18	1	20	SPARE
SPARE	20	1	19		0.00				20	1	20	SPARE
SPARE	20	1	21			0.00			22	1	20	SPARE
SPARE	20	1	23				0.00		24	1	20	SPARE
SPACE			25		0.00				26			SPACE
SPACE			27			0.00			28			SPACE
SPACE			29				0.00		30			SPACE
SPACE			31		0.00				32			SPACE
SPACE			33			0.00			34			SPACE
SPACE			35				0.00		36			SPACE
SPACE			37		2.20			2.20	38	3	30	PANEL UPS2
SPACE			39			1.00		1.00	40			
SPACE			41				1.70	1.70	42			
				SUBTOTAL	4.40	3.50	3.30	SUBTOTAL				

VOLTAGE:	120/208	TOTAL kVA	11.20	PANEL NAME:	UPS1
MAIN BREAKER:	80	TOTAL AMPS	31	LOCATION:	STORAGE RM 114
BUSES:	100			MOUNTING:	SURFACE
PH & WIRES:	3PH 4W			AIC RATING:	22 kAIC
NOTES:					

'UPS-1'
PANEL SCHEDULE

DIRECTORY	BRKR	POLE	CKT #	KVA	KVA LOADS A	B	C	KVA	CKT #	POLE	BRKR	DIRECTORY
GAC TURBIDIMETER	20	1	1	0.20	0.70			0.50	2	1	20	PLC4 - CHEM RM 132
PLC3 - BOILER RM 128	20	1	3	0.50		1.00		0.50	4	1	20	PLC5 - CHEM RM 132
CL ANALYZER - CHEM RM 132	20	1	5	0.20			1.70	1.50	6	1	20	ALUM PUMP #2 - CHEM RM 132
ALUM PUMP #1 - CHEM RM 132	20	1	7	1.50	1.50				8	1	20	SPARE
SPARE	20	1	9			0.00			10	1	20	SPARE
SPARE	20	1	11				0.00		12	1	20	SPARE
SPARE	20	1	13		0.00				14	1	20	SPARE
SPARE	20	1	15			0.00			16	1	20	SPARE
SPARE	20	1	17				0.00		18	1	20	SPARE
SPARE	20	1	19		0.00				20	1	20	SPARE
SPACE			21			0.00			22			SPACE
SPACE			23				0.00		24			SPACE
SPACE			25		0.00				26			SPACE
SPACE			27			0.00			28			SPACE
SPACE			29				0.00		30			SPACE
				SUBTOTAL	2.20	1.00	1.70	SUBTOTAL				

VOLTAGE:	120/208	TOTAL kVA	4.90	PANEL NAME:	UPS2
MAIN BREAKER:	MLO	TOTAL AMPS	14	LOCATION:	CORRIDOR 130B
BUSES:	100			MOUNTING:	SURFACE
PH & WIRES:	3PH 4W			AIC RATING:	22 kAIC
NOTES:					

'UPS-2'
PANEL SCHEDULE

DIRECTORY	BRKR	POLE	CKT #	KVA	KVA LOADS A	B	C	KVA	CKT #	POLE	BRKR	DIRECTORY
EXISTING HOIST	15	3	1	3.30	6.60			3.30	2	3	40	PANEL PP2
			3	3.30		6.40		3.10	4			
			5	3.30			5.00	1.70	6			
SPARE	20	3	7		0.00				8	3	20	SPARE
			9			0.00			10			
			11				0.00		12			
SPACE			13		0.00				14			SPACE
SPACE			15			0.00			16			SPACE
SPACE			17				0.00		18			SPACE
SPACE			19		0.00				20			SPACE
SPACE			21			0.00			22			SPACE
SPACE			23				0.00		24			SPACE
				SUBTOTAL	6.60	6.40	5.00	SUBTOTAL				

VOLTAGE:	480	TOTAL kVA	18.00	PANEL NAME:	HP1
MAIN BREAKER:	60	TOTAL AMPS	22	LOCATION:	STORAGE ROOM 114
BUSES:	100			MOUNTING:	SURFACE
PH & WIRES:	3PH 3W			AIC RATING:	22 kAIC
NOTES: THIS PANEL IS 3 PHASE, 3 WIRE ONLY AND CONTAINS NO NEUTRAL					

'HP1'
PANEL SCHEDULE

ISSUE FOR BID

900 Washington Street, Suite 325N
Dedham, Massachusetts 02026
800.446.5518 | www.woodardcurran.com
WOODARD & CURRAN
COMMITMENT & INTEGRITY DRIVE RESULTS

THIS DOCUMENT IS THE PROPERTY OF WOODARD & CURRAN INC., AND ITS CLIENT. REPRODUCTION OR MODIFICATION WITHOUT WRITTEN PERMISSION IS PROHIBITED.

COMMONWEALTH OF MASSACHUSETTS
JAMES A. BREW FITZPATRICK
ELECTRICAL
NO. 50761
REGISTERED PROFESSIONAL ENGINEER
Mar 17, 2015

REV	DESCRIPTION	DATE
B	ISSUE FOR BID	3/11/15
A	FOR MASSDEP REVIEW	07/18/14

DESIGNED BY: SEH/GW CHECKED BY: AJF
DRAWN BY: SEH/PO 224802 E-202.DWG

WATER TREATMENT PLANT
ELECTRICAL ONE-LINE DIAGRAM
AND PANEL SCHEDULES

LOWELL REGIONAL WATER UTILITY
LOWELL, MASSACHUSETTS

WATER SYSTEM IMPROVEMENTS

JOB NO.:224802.20
DATE: MARCH 2015
SCALE: AS NOTED
SHEET: 37 OF 51

E-202

\\wc\Shared\Projects\224802 Lowell MA - Water System Improvement PEF 2011\wip\Drawings\Electrical\224802 E-202.dwg, Mar 02, 2015 - 1:57pm

24x36 SHEET
1:1

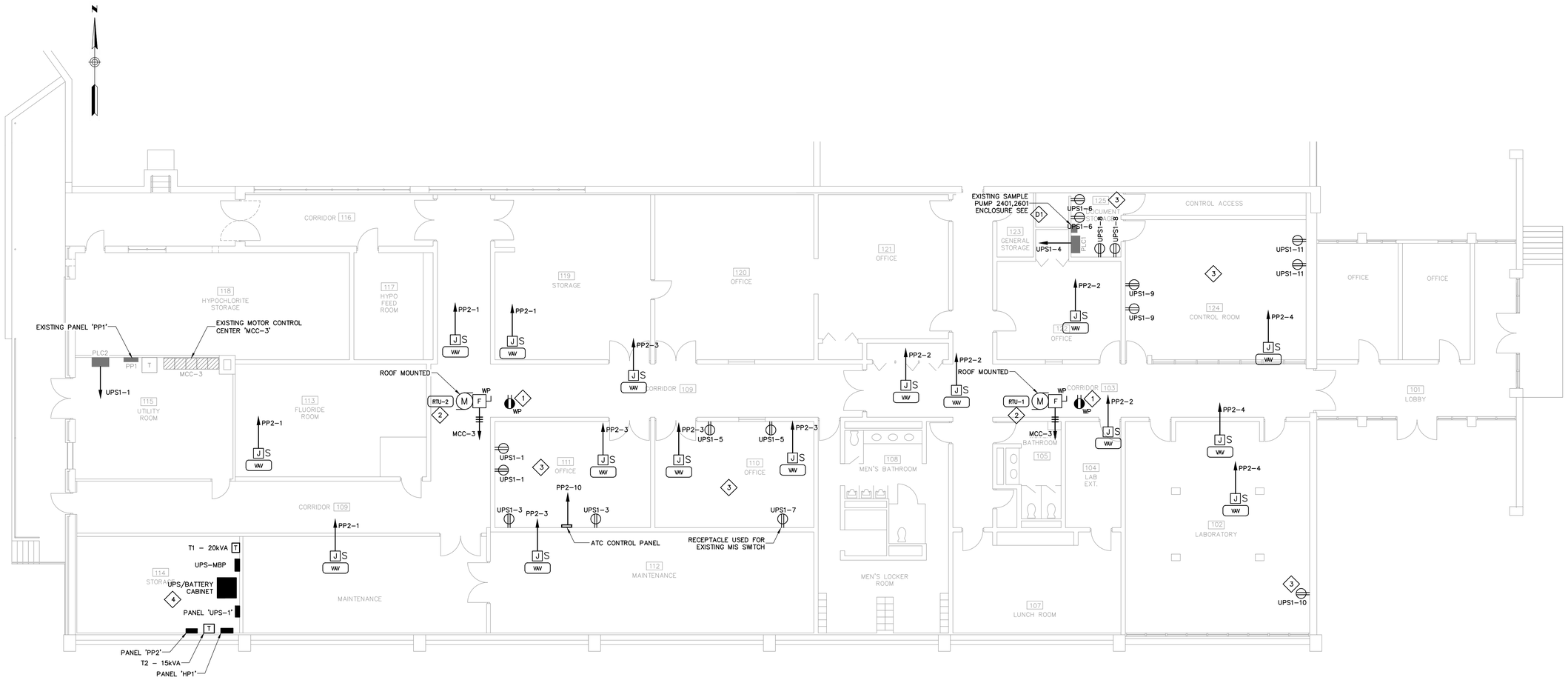

10 MGD PLANT ELECTRICAL PLAN

SCALE: 1/8" = 1'-0"

KEYED DEMOLITION NOTES:

D1. DISCONNECT AND REMOVE ALL POWER/CONTROL WIRING BACK TO SOURCE FOR THE SAMPLE PUMP MOTOR STARTERS. REMOVE STARTERS AND ENCLOSURE AND RETURN TO LOWELL WATER. SEE NEW PLAN E-215 FOR NEW CIRCUITS TO PUMPS.

GENERAL NOTES:

1. COORDINATE ALL UPS1 FED RECEPTACLE LOCATIONS WITH ASSOCIATED EQUIPMENT BEING SUPPORTED, ALSO COORDINATE AND CONFIRM LOCATIONS WITH OWNER AND ENGINEER IN THE FIELD.
2. ALL EQUIPMENT SHOWN IN BOLD DESIGNATION SHALL BE CONSIDERED NEW, ALL EQUIPMENT SHOWN IN LIGHTER DESIGNATION SHALL BE CONSIDERED EXISTING.
3. REFERENCE ONE-LINE DIAGRAM ON SHEET E-202 FOR CABLE & CONDUIT NOT SHOWN.

KEYED NOTES:

1. DISCONNECT AND REMOVE EXISTING RECEPTACLE AND PROVIDE NEW GFCI WITH WEATHERPROOF IN-USE COVER AT NEW RTU LOCATION, EXTEND EXISTING CIRCUIT AS REQUIRED (TYP. FOR 2)
2. SEE THE PARTIAL ONE-LINE ON DRAWING E-202 FOR WIRING REQUIREMENTS FOR ROOF-TOP UNITS
3. PROVIDE WIREMOLD V700 SERIES RACEWAY ON WALLS FOR NEW RECEPTACLES - EXTEND ABOVE CEILING TO JB AS REQUIRED.
4. ALL NEW UPS CIRCUITS SHALL BE RUN TO NEW RECEPTACLES OR EXISTING EQUIPMENT SHOWN PRIOR TO DISCONNECTING EXISTING EQUIPMENT CIRCUIT. AFTER UPS PANEL IS ONLINE, CONNECT NEW CKT. KEEPING DOWNTIME TO A MINIMUM.

12' 8' 4' 0 8' 16'

BAR SCALE
1/8" = 1'-0"
CHECK GRAPHIC SCALE BEFORE USING

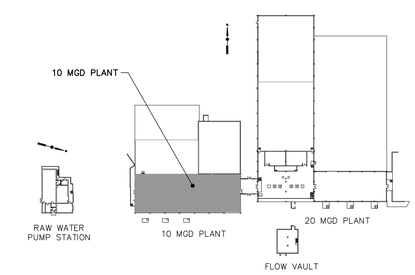

KEY PLAN

N.T.S.

ISSUE FOR BID

980 Washington Street, Suite 325N
Dedham, Massachusetts 02026
800.446.5518 | www.woodardcurran.com
WOODARD & CURRAN
COMMITMENT & INTEGRITY DRIVE RESULTS

THIS DOCUMENT IS THE PROPERTY OF WOODARD & CURRAN INC., AND ITS CLIENT. REPRODUCTION OR MODIFICATION WITHOUT WRITTEN PERMISSION IS PROHIBITED.

COMMONWEALTH OF MASSACHUSETTS
ALBERT F. FITZPATRICK
ELECTRICAL
NO. 50761
Mar 17, 2015
REGISTERED PROFESSIONAL ENGINEER

REV	DESCRIPTION	DATE
B	ISSUE FOR BID	3/11/15
A	FOR MASSDEP REVIEW	07/18/14

DESIGNED BY: SEH/GW
DRAWN BY: SEH/RO
CHECKED BY: AJF
224802 E-211.DWG

10 MGD PLANT
ELECTRICAL PLANS

LOWELL REGIONAL WATER UTILITY
LOWELL, MASSACHUSETTS

WATER SYSTEM IMPROVEMENTS

JOB NO.:224802.20
DATE: MARCH 2015
SCALE: AS NOTED
SHEET: 38 OF 51

E-211

\\wc\shared\Projects\224802 Lowell MA - Water System Improvement PEF 2011\wip\Drawings\Electrical\224802 E-211.dwg, Mar 02, 2015 - 1:57pm

24x36 SHEET
1:1

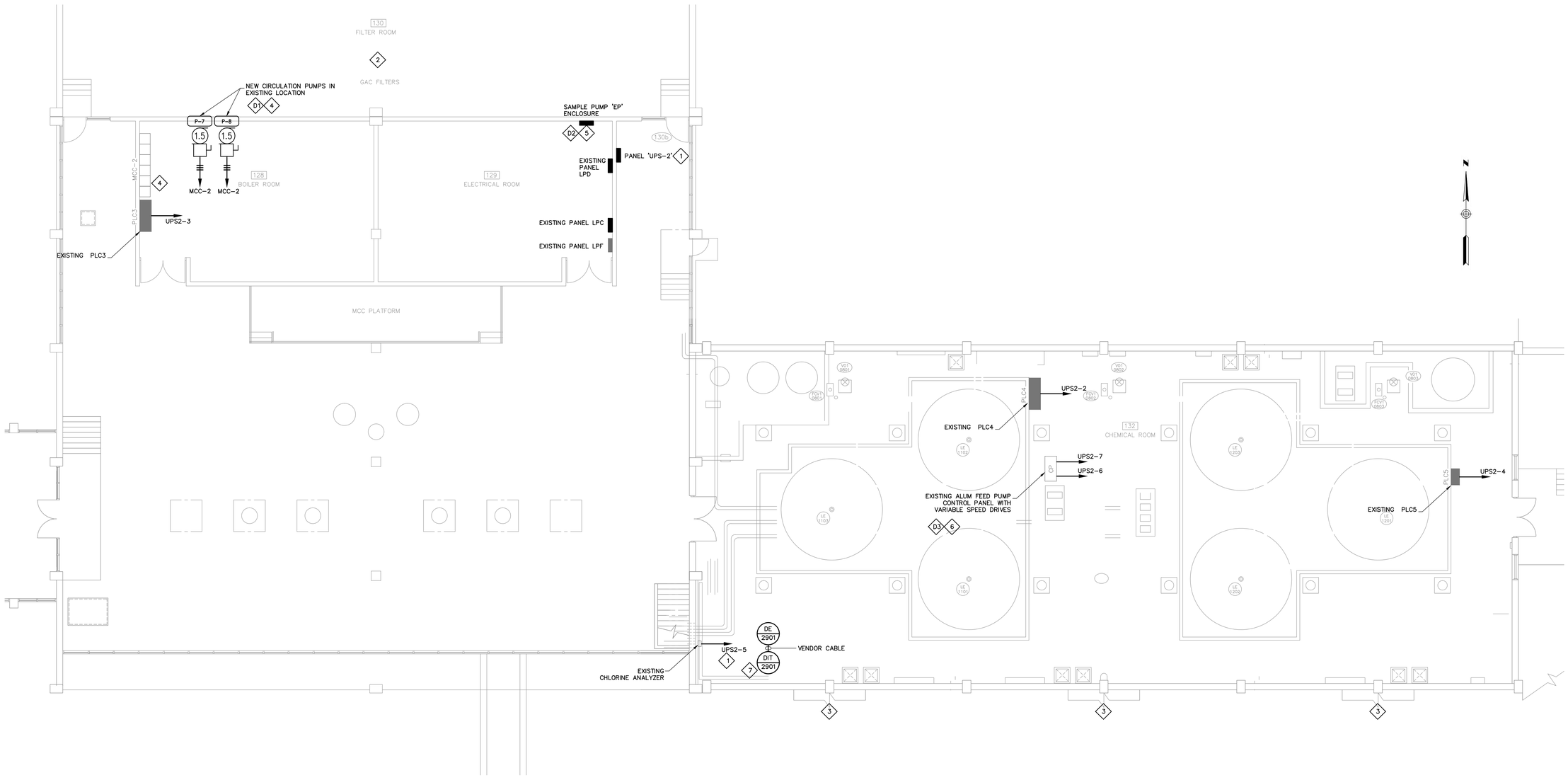

GENERAL NOTES:

1. REFERENCE INSTRUMENTATION & CONTROLS RISER DIAGRAMS ON SHEETS E-221 & E-222 FOR CONTROL CABLE AND CONDUIT NOT SHOWN.
2. REFERENCE ONE-LINE DIAGRAM ON SHEET E-202 FOR CABLE AND CONDUIT NOT SHOWN.
3. ALL EQUIPMENT SHOWN IN BOLD DESIGNATION SHALL BE CONSIDERED NEW. ALL EQUIPMENT SHOWN IN LIGHT DESIGNATION SHALL BE CONSIDERED EXISTING.

KEYED NOTES:

1. ALL NEW UPS CIRCUITS SHALL BE RUN TO EXISTING EQUIPMENT SHOWN PRIOR TO DISCONNECTING EXISTING CIRCUITS. AFTER UPS PANEL IS ONLINE, CONNECT NEW CKT. KEEPING DOWNTIME TO A MINIMUM. ALL WIRING RUN FROM PANEL UPS-2 TO EQUIPMENT IN CHEMICAL ROOM SHALL BE #10AWG.
2. REFERENCE SHEET E-214 FOR WORK WITHIN THE GAC FILTER AREA.
3. REFERENCE SHEET E-213 FOR WORK WITHIN 20 MGD FLOW VAULTS.
4. PROVIDE NEW 1.5HP RATED MOTOR STARTERS WITHIN CUTLER HAMMER "FREEDOM SERIES 2100" MCC-2 TO SERVE REPLACEMENT CIRCULATION PUMPS P-7 AND P-8. NEW STARTERS SHALL MATCH EXISTING TYPE IN MCC-2. EXTEND EXISTING CONTROL WIRING TO NEW STARTERS TO RETURN CIRCULATION PUMPS TO PREVIOUS OPERATION.
5. EXTEND NEW 3/4"C TO SAMPLE PUMPS 2201, 2301, 2402, 2602 AND 2801 SHOWN ON DRAWINGS E-213, 214 AND 216. PROVIDE NEW CONDUCTORS, 2#8,1#10G. FROM PUMPS BACK TO PANEL LPC, PROVIDE NEW 25A, SINGLE POLE BREAKERS FOR EACH PUMP CIRCUIT.
6. PROVIDE NEW 120V, 20A CKT. TO EACH ALUMP PUMP VFD FROM UPS PANEL SHOWN. AFTER UPS IS ONLINE, DISCONNECT EXISTING CKT. AND CONNECT NEW CKT. TO KEEP DOWNTIME ON PUMPS TO A MINIMUM.
7. DISCONNECT THE POWER AND CONTROL WIRING TO THE EXISTING TURBIDIMETER, MOUNT NEW POWER SUPPLY/TRANSMITTER(DIT) AND RE-CONNECT EXISTING POWER/CONTROL WIRES TO NEW POWER SUPPLY.

20 MGD PLANT ELECTRICAL PLAN

SCALE: 1/8" = 1'-0"

KEYED DEMOLITION NOTES:

D1. DISCONNECT ELECTRICAL WIRING AT EXISTING 3/4 HP, 460V, 3PH PUMPS P7 AND P8, PUMPS WILL BE REMOVED BY MECHANICAL CONTRACTOR. EXISTING DISCONNECT SWITCHES TO REMAIN FOR NEW 1.5 HP PUMPS ALONG WITH EXISTING CONDUIT BACK TO MCC-2.

D2. SAMPLE PUMP ENCLOSURE 'CP' HOUSES (5) STARTERS FOR SAMPLE PUMPS 2201, 2301, 2402, 2602 AND 2801: STARTERS ARE FED FROM PANEL 'LPC' VIA (5) 3/4" CONDUITS TO ENCLOSURE. REMOVE ALL STARTERS, ENCLOSURE AND POWER/CONTROL CONDUCTORS BACK TO PUMPS, ALSO REMOVE CONDUCTORS BACK TO FEEDER PANEL 'LPC'.

D3. DISCONNECT AND REMOVE EXISTING 120V, 20A CKTS. BACK TO PANEL 'LPF', SEE KEYED NOTE 6 PRIOR TO DISCONNECTION.

12' 8' 4' 0 8' 16'

BAR SCALE
1/8" = 1'-0"
CHECK GRAPHIC SCALE BEFORE USING

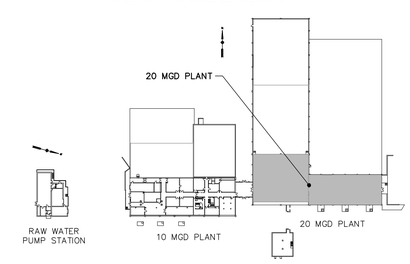

KEY PLAN

N.T.S.

ISSUE FOR BID

900 Washington Street, Suite 325N
Dedham, Massachusetts 02026
800.446.5518 | www.woodardcurran.com
WOODARD & CURRAN
COMMITMENT & INTEGRITY DRIVE RESULTS

THIS DOCUMENT IS THE PROPERTY OF WOODARD & CURRAN INC., AND ITS CLIENT. REPRODUCTION OR MODIFICATION WITHOUT WRITTEN PERMISSION IS PROHIBITED.

COMMONWEALTH OF MASSACHUSETTS
ALBERT W. FITZPATRICK
ELECTRICAL
NO. 50761
REGISTERED PROFESSIONAL ENGINEER
Mar 17, 2015

REV	DESCRIPTION	DATE
B	ISSUE FOR BID	3/11/15
A	FOR MASSDEP REVIEW	07/18/14

DESIGNED BY: SEH/GW
CHECKED BY: AJF
DRAWN BY: SEH/PO
224802 E-212.DWG

20 MGD PLANT ELECTRICAL PLAN

LOWELL REGIONAL WATER UTILITY
LOWELL, MASSACHUSETTS

WATER SYSTEM IMPROVEMENTS

JOB NO.:224802.20
DATE: MARCH 2015
SCALE: AS NOTED
SHEET: 39 OF 51

E-212

\\wc\shared\Projects\224802 Lowell MA - Water System Improvement PEF 2011\wip\Drawings\Electrical\224802 E-212.dwg, Mar 02, 2015 - 1:57pm

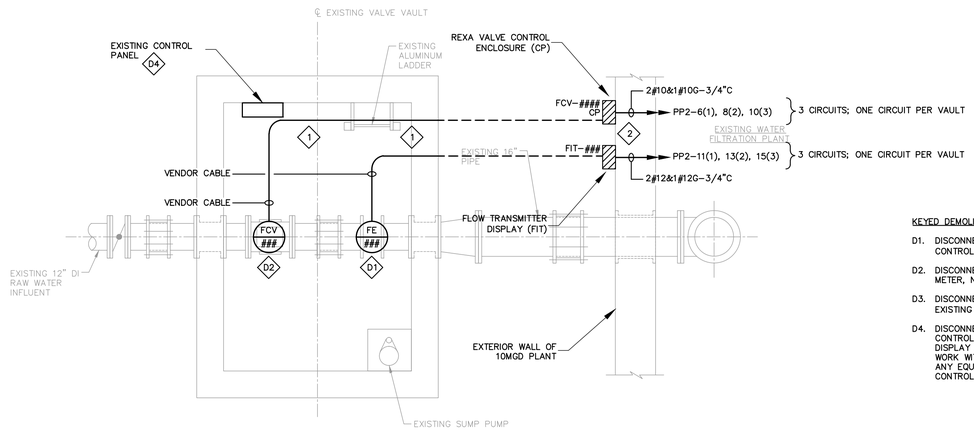

FLOW CONTROL VAULT (10MGD) TYPICAL OF 3 VAULTS

SCALE: 1/2" = 1'-0"

KEYED DEMOLITION NOTES:

D1. DISCONNECT ALL ELECTRICAL ASSOCIATED WITH EXISTING FLOW CONTROL VALVE/MOTOR ACUTATOR, NOT SHOWN.

D2. DISCONNECT ALL ELECTRICAL ASSOCIATED WITH EXISTING MAG FLOW METER, NOT SHOWN.

D3. DISCONNECT AND REMOVE THE HOA AND SELECTOR SWITCH TO THE EXISTING SAMPLE PUMP (NOT SHOWN), REWIRE NEW AS SHOWN.

D4. DISCONNECT AND REMOVE CONTROL PANEL AND ALL WIRING FROM CONTROL PANEL TO MOTOR ACTUATOR, MAG METER AND MAG METER DISPLAY ALL LOCATED IN VAULT. COORDINATE EXACT TIMING OF WORK WITH MECHANICAL CONTRACTOR PRIOR TO DISCONNECTION OF ANY EQUIPMENT IN VAULT. CAP THE FEEDER CONDUITS TO THE CONTROL PANEL AFTER ALL CONDUCTORS HAVE BEEN REMOVED

GENERAL NOTES:

1. REFERENCE INSTRUMENTATION & CONTROLS RISER DIAGRAMS ON SHEETS E-221 & E-222 FOR CONTROL CABLE AND CONDUIT NOT SHOWN.

2. REFERENCE ONE-LINE DIAGRAM ON SHEET E-202 FOR CABLE AND CONDUIT NOT SHOWN.

2. ITEMS SHOWN WITH LIGHT DESIGNATION INDICATE EXISTING ITEMS TO REMAIN. ITEMS SHOWN WITH BOLD DESIGNATION INDICATE NEW OR AFFECTED ITEMS UNLESS NOTED OTHERWISE.

KEYED NOTES:

1. EXTEND CONDUIT AND CABLE AS INDICATED FROM EACH FLOW ELEMENT (FE) AND FLOW CONTROL VALVE ACTUATOR (FCV), WITHIN THE FLOW CONTROL VAULT, BACK TO ASSOCIATED FLOW TRANSMITTER (FIT) AND FCV ACTUATOR CP, ABOVE GRADE. CORE DRILL VAULT FOR CONDUIT PENETRATIONS AND ROUTE CONDUIT BELOW GRADE AND STUB UP BENEATH ASSOCIATED DEVICE (FIT-### AND FCV ACTUATOR CP) SHOWN MOUNTED ON EXTERIOR WALL. PROVIDE EXPANSION COUPLINGS FOR ALL CONDUITS THAT TRANSITION FROM BELOW TO ABOVE GRADE. REFERENCE CONDUIT STUB UP DETAIL AND DUCT BANK DETAIL ON SHEET E-401 FOR FURTHER REQUIREMENTS.

2. MOUNT FLOW INDICATING TRANSMITTER DISPLAY (FIT-####) AND FCV CONTROL ENCLOSURE PANEL (FCV-### CP), ABOVE GRADE, TO EXTERIOR WALL OF FACILITY, SEE THE VALVE VAULT EQUIPMENT STAND DETAIL ON DRAWING E-401 FOR MOUNTING REQUIREMENTS. COORDINATE FINAL MOUNTING LOCATION WITH OWNER AND ENGINEER IN THE FIELD. ALL NEW WORK ASSOCIATED WITH FLOW CONTROL VAULTS SHALL BE PERFORMED BEFORE DISCONNECTION OF EXISTING VAULT ELECTRICAL SYSTEMS (TYPICAL OF (3) PANELS ON THE 10MGD SIDE AND (3) ON THE 20MGD SIDE.
SEE INSTRUMENTATION AND CONTROLS RISER DIAGRAM ON DRAWINGS E-221 AND E-222 FOR CONTROL CABLES, CONDUITS, AND INSTRUMENT TAG NUMBERS NOT SHOWN.

3. PROVIDE UNISTRUT SUPPORTS FOR SAMPLE PUMP ENCLOSURE AND TL RECEPTACLE BOX. ENCLOSURE PRE-WIRED WITH HAND SELECTOR SWITCH, CURRENT TRANSFORMERS, AND TERMINAL BLOCKS. ELECTRICAL CONTRACTOR TO MOUNT ENCLOSURE AND WIRE TL RECEPTACLE TO ENCLOSURE. REFER TO INSTRUMENT DRAWINGS ON SHEET I-801 FOR DETAILS ON THE ENCLOSURE AND REFER TO THE INSTRUMENTATION AND CONTROLS RISER DIAGRAMS ON SHEETS E-221 & E-222 FOR SIGNAL WIRING TO ENCLOSURES.

4. PROVIDE NEW 25A, SINGLE POLE CIRCUIT BREAKER FOR NEW PUMP CIRCUIT.

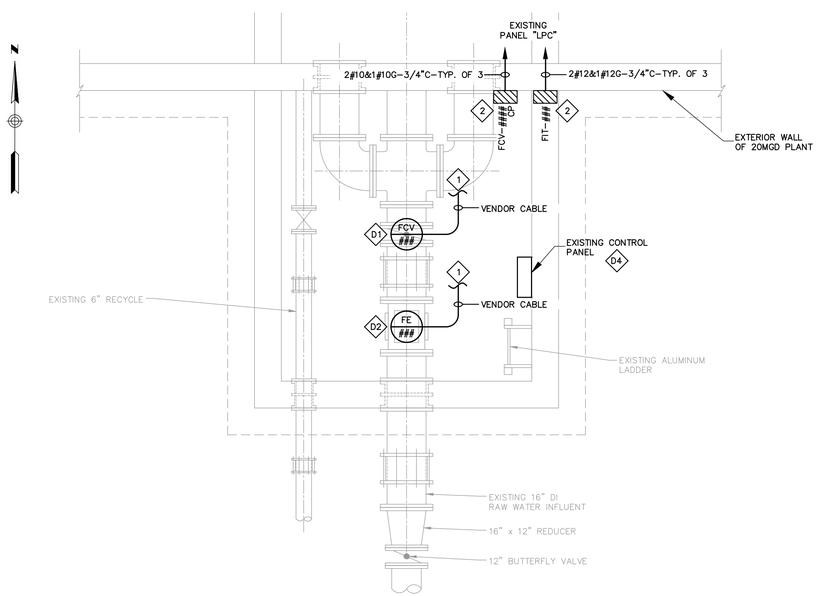

FLOW CONTROL VAULT (20MGD) TYPICAL OF 3 VAULTS

SCALE: 1/2" = 1'-0"

4' 3' 2' 1' 0 3' 6'

BAR SCALE
3/8" = 1'-0"
CHECK GRAPHIC SCALE BEFORE USING

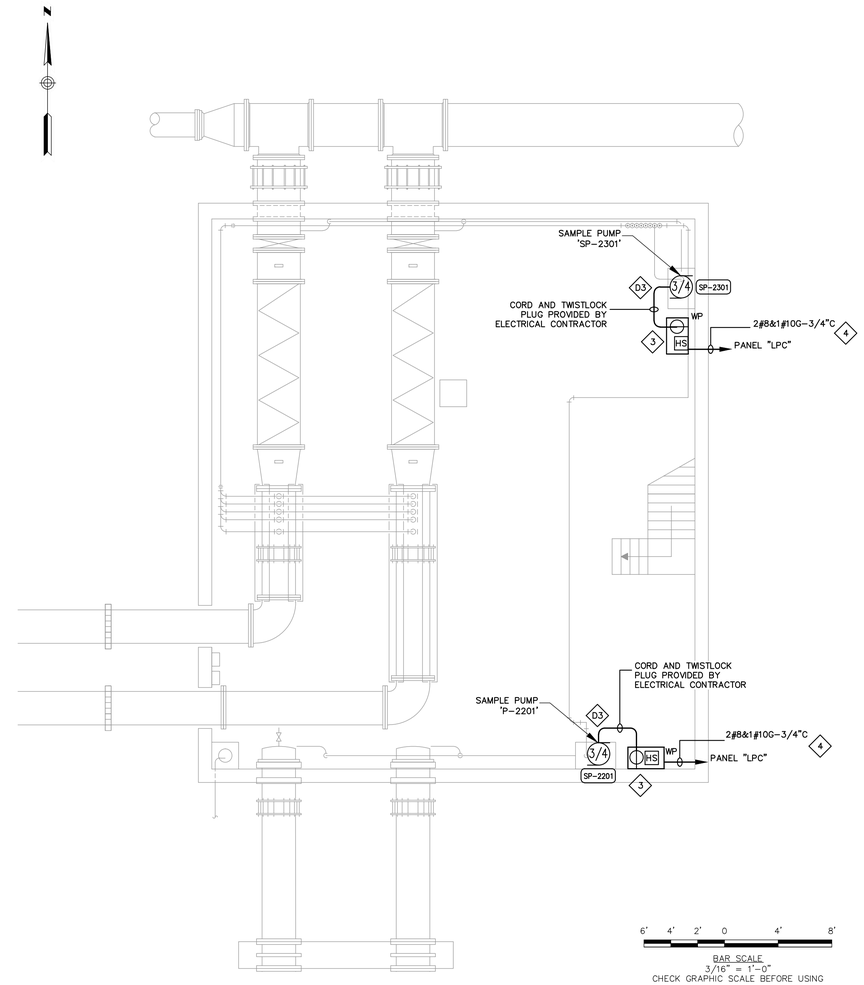

6' 4' 2' 0 4' 8'

BAR SCALE
3/16" = 1'-0"
CHECK GRAPHIC SCALE BEFORE USING

RAW WATER FLOW VAULT

SCALE: 3/16" = 1'-0"

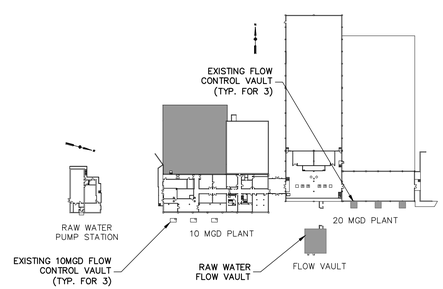

KEY PLAN

N.T.S.

ISSUE FOR BID

900 Washington Street, Suite 325N
Dedham, Massachusetts 02026
800.446.5518 | www.woodardcurran.com
COMMITMENT & INTEGRITY DRIVE RESULTS
WOODARD & CURRAN

THIS DOCUMENT IS THE PROPERTY OF WOODARD & CURRAN INC., AND ITS CLIENT. REPRODUCTION OR MODIFICATION WITHOUT WRITTEN PERMISSION IS PROHIBITED.

COMMONWEALTH OF MASSACHUSETTS
JOSEPH A. KIBBEY
FITZPATRICK
ELECTRICAL
NO. 50761
03/17/15
REGISTERED PROFESSIONAL ENGINEER

REV	DESCRIPTION	DATE
B	ISSUE FOR BID	3/11/15
A	FOR MASSDEP REVIEW	07/18/14

DESIGNED BY: SEH/GW CHECKED BY: AJF
DRAWN BY: SEH/RO 224802 E-213.DWG

FLOW CONTROL VAULTS
ELECTRICAL PLANS

LOWELL REGIONAL WATER UTILITY
LOWELL, MASSACHUSETTS

WATER SYSTEM IMPROVEMENTS

JOB NO.:224802.20
DATE: MARCH 2015
SCALE: AS NOTED
SHEET: 40 OF 51

E-213

24x36 SHEET
1:1

\\wc\shared\Projects\224802 Lowell MA - Water System Improvement PEF 2011\wsp\Drawings\Electrical\224802 E-213.dwg, Mar 02, 2015 - 1:57pm

24x36 SHEET
1:1

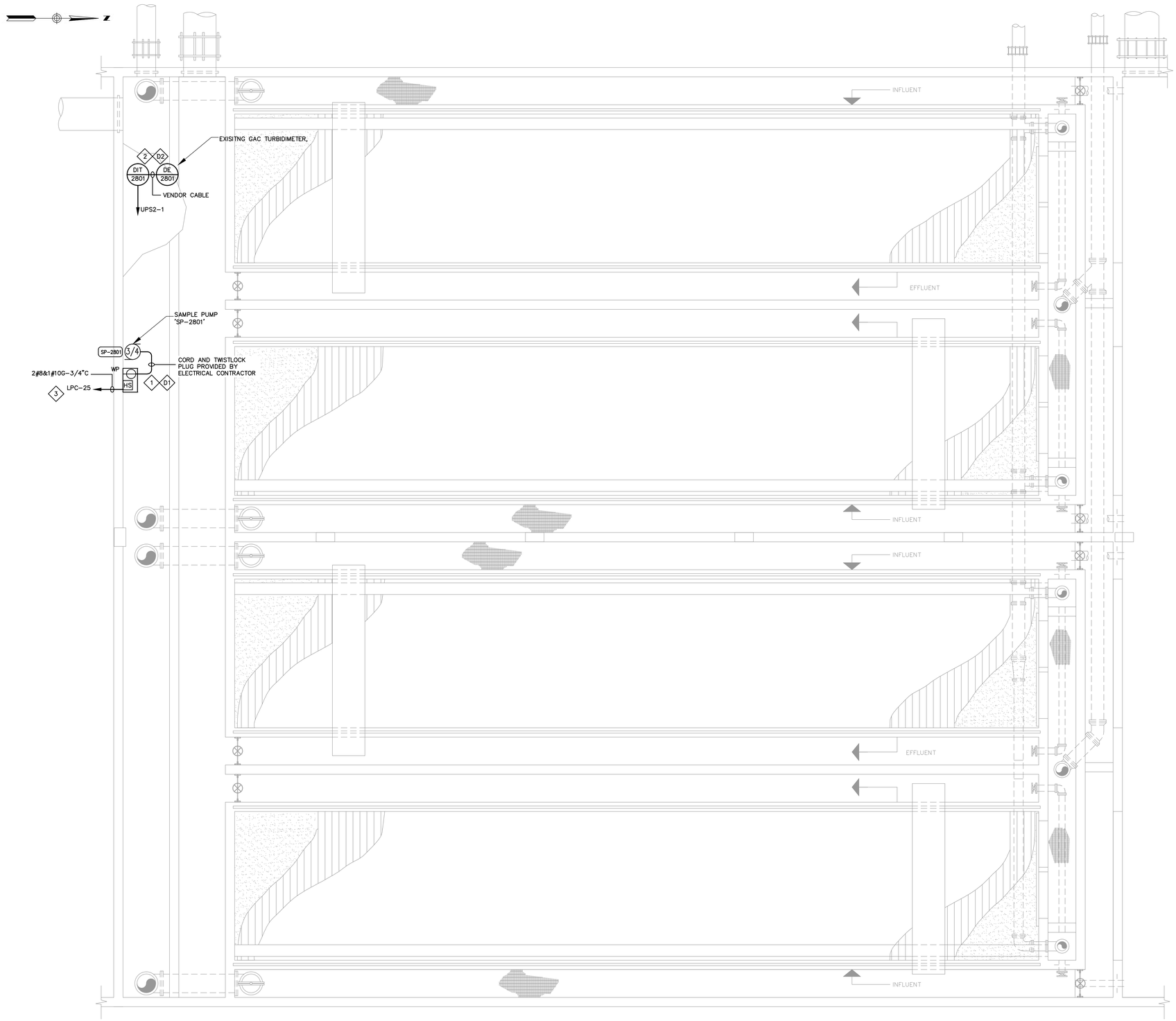

GENERAL NOTES:

1. REFERENCE INSTRUMENTATION & CONTROLS RISER DIAGRAMS ON SHEETS E-221 & E-222 FOR CONTROL CABLE AND CONDUIT NOT SHOWN.
2. REFERENCE ONE-LINE DIAGRAM ON SHEET E-202 FOR CABLE AND CONDUIT NOT SHOWN.
3. ALL EQUIPMENT SHOWN IN BOLD DESIGNATION SHALL BE CONSIDERED NEW. ALL EQUIPMENT SHOWN IN LIGHT DESIGNATION SHALL BE CONSIDERED EXISTING.

KEYED DEMOLITION NOTES:

D1. EXISTING SAMPLE PUMP 2801 HAS A CORD AND PLUG AND IS PLUGGED INTO A LOCAL RECEPTACLE ADJACENT TO THE PUMP. THE LOCAL RECEPTACLE SHALL REMAIN, WIRE NEW CIRCUIT AS SHOWN.

D2. DISCONNECT THE POWER AND CONTROL WIRING TO THE EXISTING TURBIDIMETER. MOUNT NEW POWER SUPPLY/TRANSMITTER (DIT) AND RE-CONNECT THE EXISTING CONTROL WIRING TO THE NEW TURBIDIMTER. PULL THE 120V POWER WIRING BACK TO THE SOURCE PANEL AND REMOVE, PROVIDE JB FOR EXISTING CONDUIT THAT SHALL REMAIN AND WIRE NEW TURBIDIMETER TO THE UPS AS SHOWN.

KEYED NOTES:

1. PROVIDE UNISTRUT SUPPORTS FOR SAMPLE PUMP ENCLOSURE AND TL RECEPTACLE BOX. ENCLOSURE PRE-WIRED WITH HAND SELECTOR SWITCH, CURRENT TRANSFORMERS, AND TERMINAL BLOCKS. ELECTRICAL CONTRACTOR TO MOUNT ENCLOSURE AND WIRE TL RECEPTACLE TO ENCLOSURE. REFER TO INSTRUMENT DRAWINGS ON SHEET I-801 FOR DETAILS ON THE ENCLOSURE AND REFER TO THE INSTRUMENTATION AND CONTROLS RISER DIAGRAMS ON SHEETS E-221 & E-222 FOR SIGNAL WIRING TO ENCLOSURES.
2. ELECTRICAL CONTRACTOR TO MOUNT POWER SUPPLY FOR TURBIDIMETER ON WALL AND RECONNECT EXISTING 120 VOLT CIRCUT. EXTEND CONTROL WIRING TO NEW TURBIDITY TRANSMITTER; IF TURBIDITY CONTROL SIGNAL WIRING REQUIRES SPLICING FOR RELOCATION, SPLICING SHALL BE WIRED ON TERMINAL BLOCK IN NEMA 4X ENCLOSURE.
3. PROVIDE A NEW 25A, SINGLE-POLE CIRCUIT BREAKER FOR PUMP CIRCUIT IN EXISTING PANEL LPC, SHOWN ON SHEET E-212.

6' 4' 2' 0 4' 8'
BAR SCALE
3/16" = 1'-0"
CHECK GRAPHIC SCALE BEFORE USING

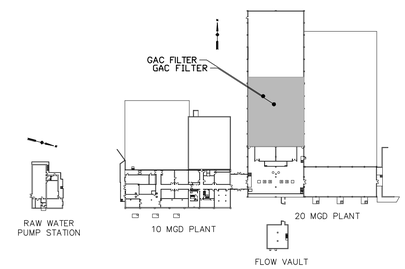

KEY PLAN
N.T.S.

ISSUE FOR BID

980 Washington Street, Suite 325N
Dedham, Massachusetts 02026
800.446.5518 | www.woodardcurran.com
WOODARD & CURRAN
COMMITMENT & INTEGRITY DRIVE RESULTS

THIS DOCUMENT IS THE PROPERTY OF WOODARD & CURRAN INC., AND ITS CLIENT. REPRODUCTION OR MODIFICATION WITHOUT WRITTEN PERMISSION IS PROHIBITED.

COMMONWEALTH OF MASSACHUSETTS
STEVEN H. GREY
FITZPATRICK
ELECTRICAL
NO. 50761
REGISTERED PROFESSIONAL ENGINEER

REV	DESCRIPTION	DATE
B	ISSUE FOR BID	3/11/15
A	FOR MASSDEP REVIEW	07/18/14

DESIGNED BY: SEH/GW CHECKED BY: AJF
DRAWN BY: SEH/PO 224802 E-214.DWG

GAC FILTER ELECTRICAL PLANS

LOWELL REGIONAL WATER UTILITY
LOWELL, MASSACHUSETTS

WATER SYSTEM IMPROVEMENTS

JOB NO.: 224802.20
DATE: MARCH 2015
SCALE: AS NOTED
SHEET: 41 OF 51

E-214

\\wc\shared\Projects\224802 Lowell MA - Water System Improvement PEF 2011\wip\Drawings\Electrical\224802 E-214.dwg, Mar 02, 2015 - 1:57pm

24x36 SHEET
1:1

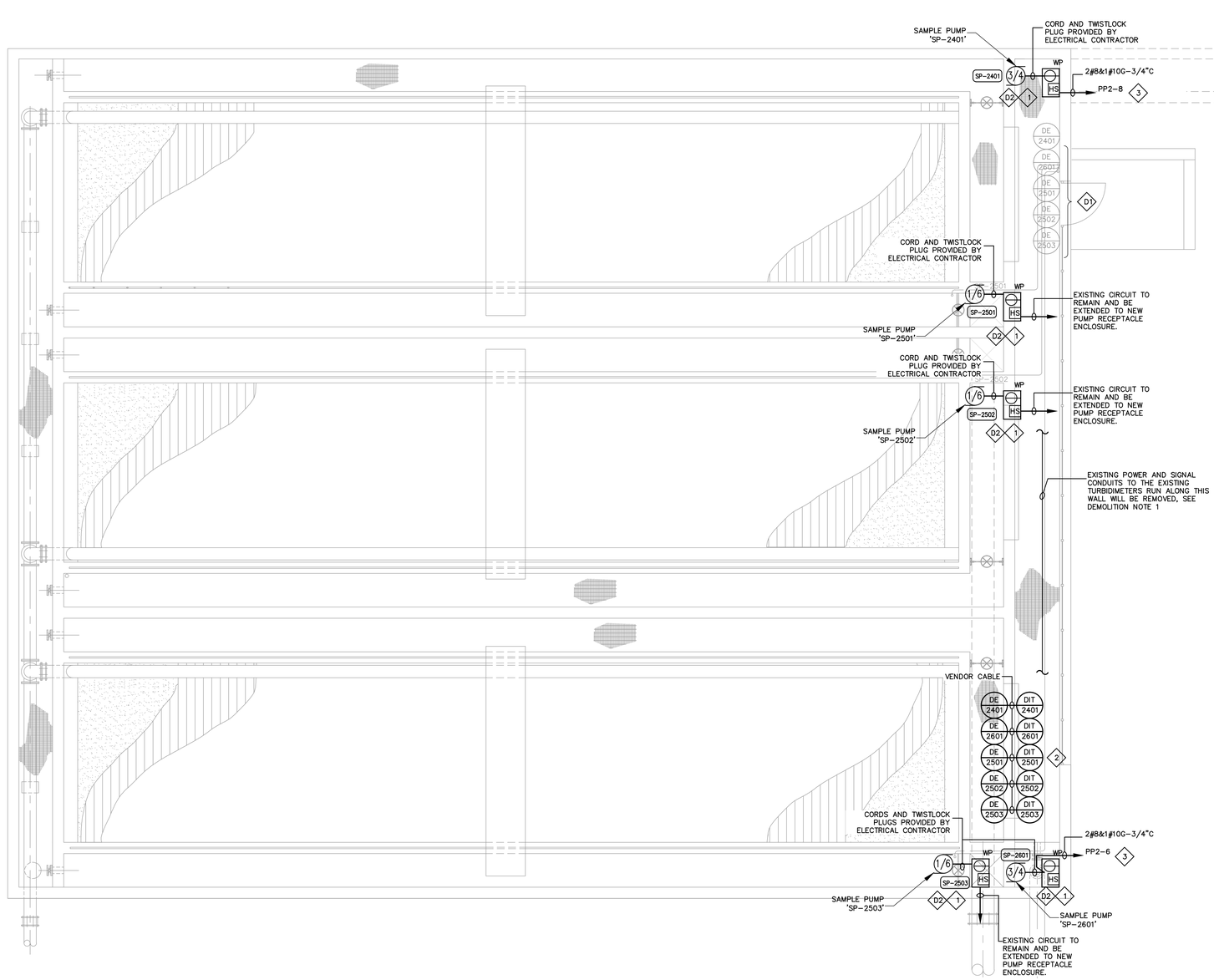

SAND MEDIA FILTER ELECTRICAL PLAN (10 MGD)

SCALE: 3/16" = 1'-0"

GENERAL NOTES:

1. REFERENCE INSTRUMENTATION & CONTROLS RISER DIAGRAMS ON SHEETS E-221 & E-222 FOR CONTROL CABLE AND CONDUIT NOT SHOWN.
2. REFERENCE ONE-LINE DIAGRAM ON SHEET E-202 FOR CABLE AND CONDUIT NOT SHOWN.
3. ALL EQUIPMENT SHOWN IN BOLD DESIGNATION SHALL BE CONSIDERED NEW. ALL EQUIPMENT SHOWN IN LIGHT DESIGNATION SHALL BE CONSIDERED EXISTING.

KEYED DEMOLITION NOTES:

D1. EXISTING TURBIDIMETERS TO BE REMOVED, DISCONNECT POWER AND CONTROL WIRING AND PULL ALL WIRING BACK TO NEW TURBIDIMETER LOCATIONS, SHOWN IN NORTHEAST CORNER. REMOVE ALL EXISTING CONDUIT BACK TO THE NEW TURBIDIMETERS, SEE KEYED NOTE 2 BELOW.

D2. DISCONNECT AND REMOVE THE HOA AND SELECTOR SWITCH TO THE EXISTING SAMPLE PUMP (NOT SHOWN), RE-WIRE NEW AS SHOWN

KEYED NOTES:

1. PROVIDE UNISTRUT SUPPORTS FOR SAMPLE PUMP ENCLOSURE AND TL RECEPTACLE BOX. ENCLOSURE PRE-WIRED WITH HAND SELECTOR SWITCH, CURRENT TRANSFORMERS, AND TERMINAL BLOCKS. ELECTRICAL CONTRACTOR TO MOUNT ENCLOSURE AND WIRE TL RECEPTACLE TO ENCLOSURE. REFER TO INSTRUMENT DRAWINGS ON SHEET I-801 FOR DETAILS ON THE ENCLOSURE AND REFER TO THE INSTRUMENTATION AND CONTROLS RISER DIAGRAMS ON SHEETS E-221 & E-222 FOR SIGNAL WIRING TO ENCLOSURES.
2. MOUNT NEW TURBIDITY POWER SUPPLIES/TRANSMITTERS (DIT) ADJACENT TO RESPECTIVE NEW TURBIDIMETER AND RE-CONNECT THE EXISTING POWER/CONTROL WIRING TO THE NEW TRANSMITTER. ONLY ONE TURBIDIMETER SHALL BE DISCONNECTED AND MOVED AT A TIME, COORDINATE WITH OWNER AND ENGINEER ON THE SEQUENCING OF THE RELOCATION AND RECONNECTIONS.
3. PROVIDE A NEW 25A, SINGLE-POLE BREAKER FOR PUMP CIRCUIT IN PANEL PP2.

6' 4' 2' 0 4' 8'
BAR SCALE
3/16" = 1'-0"
CHECK GRAPHIC SCALE BEFORE USING

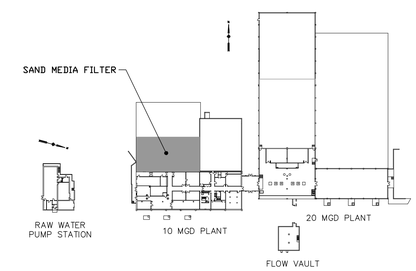

KEY PLAN

N.T.S.

ISSUE FOR BID

980 Washington Street, Suite 325N
Dedham, Massachusetts 02026
800.446.5518 | www.woodardcurran.com
WOODARD & CURRAN
COMMITMENT & INTEGRITY DRIVE RESULTS

THIS DOCUMENT IS THE PROPERTY OF WOODARD & CURRAN INC., AND ITS CLIENT. REPRODUCTION OR MODIFICATION WITHOUT WRITTEN PERMISSION IS PROHIBITED.

COMMONWEALTH OF MASSACHUSETTS
STEPHEN R. OBREY
FITZPATRICK
ELECTRICAL
NO. 50761
REGISTERED PROFESSIONAL ENGINEER

REV	DESCRIPTION	DATE
B	ISSUE FOR BID	3/11/15
A	FOR MASSDEP REVIEW	07/18/14

DESIGNED BY: SEH/GW CHECKED BY: AJF
DRAWN BY: SEH/PO 224802 E-215.DWG

SAND MEDIA FILTER
ELECTRICAL PLANS

LOWELL REGIONAL WATER UTILITY
LOWELL, MASSACHUSETTS

WATER SYSTEM IMPROVEMENTS

JOB NO.: 224802.20
DATE: MARCH 2015
SCALE: AS NOTED
SHEET: 42 OF 51

E-215

\\wc\shared\Projects\224802 Lowell MA - Water System Improvement PEF 2011\wip\Drawings\Electrical\224802 E-215.dwg, Mar 02, 2015 - 1:57pm

24x36 SHEET
1:1

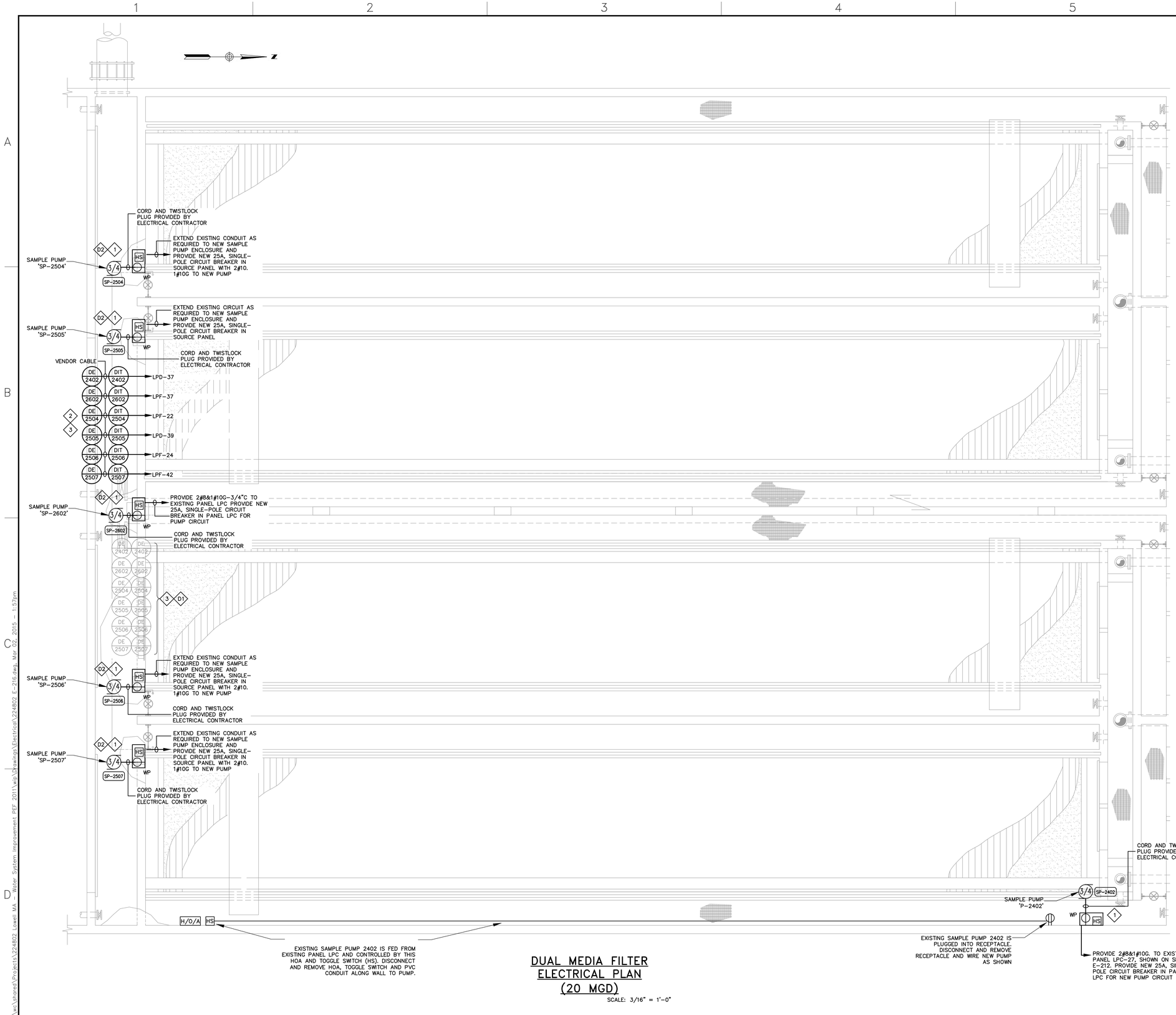

DUAL MEDIA FILTER ELECTRICAL PLAN (20 MGD)

SCALE: 3/16" = 1'-0"

GENERAL NOTES:

1. REFERENCE INSTRUMENTATION & CONTROLS RISER DIAGRAMS ON SHEETS E-221 & E-222 FOR CONTROL CABLE AND CONDUIT NOT SHOWN.
2. REFERENCE ONE-LINE DIAGRAM ON SHEET E-302 FOR CABLE AND CONDUIT NOT SHOWN.
3. ALL EQUIPMENT SHOWN IN BOLD DESIGNATION SHALL BE CONSIDERED NEW. ALL EQUIPMENT SHOWN IN LIGHT DESIGNATION SHALL BE CONSIDERED EXISTING.

KEYED DEMOLITION NOTES:

D1. TURBIDIMETERS 2402, 2602 AND 2504 ARE FED FROM ONE 120V CIRCUIT FROM EXISTING PANEL LPD AND WILL BE REMOVED. DISCONNECT AND REMOVE ALL WIRING AND CONDUIT FROM EACH TURBIDIMETER BACK TO PANEL LPD, SHOWN ON SHEET E-212. TURBIDIMETERS 2505, 2506 AND 2507 ARE ALSO FED FROM ONE 120V CIRCUIT FROM PANEL LPD AND ALL WIRING SHALL BE REMOVED SIMILAR TO ABOVE. SEE KEYED NOTE 3 BELOW FOR THE PHASING REQUIREMENTS FOR THE NEW INSTALLATION.

D2. DISCONNECT AND REMOVE THE HOA AND SELECTOR SWITCH TO THE EXISTING SAMPLE PUMP (NOT SHOWN), RE-WIRE NEW PUMP AS SHOWN.

KEYED NOTES:

1. PROVIDE UNISTRUT SUPPORTS FOR SAMPLE PUMP ENCLOSURE AND TL RECEPTACLE BOX. ENCLOSURE PRE-WIRED WITH HAND SELECTOR SWITCH, CURRENT TRANSFORMERS, AND TERMINAL BLOCKS. ELECTRICAL CONTRACTOR TO MOUNT ENCLOSURE AND WIRE TL RECEPTACLE TO ENCLOSURE. REFER TO INSTRUMENT DRAWINGS ON SHEET I-801 FOR DETAILS ON THE ENCLOSURE AND REFER TO THE INSTRUMENTATION AND CONTROLS RISER DIAGRAMS ON SHEETS E-221 & E-222 FOR COMMUNICATION WIRING TO ENCLOSURES.
2. MOUNT TURBIDITY TRANSMITTERS ON NEW POLY INSTRUMENT MOUNTING PANEL SHOWN AND CONNECT VENDOR CABLE TO ASSOCIATED TURBIDIMETER, SEE SHEET M-205 FOR LOCATIONS AND M501 FOR INSTRUMENTATION LAYOUT ON BACKBOARD.
3. PROVIDE NEW 120V CIRCUITS WITH 2#12,1#12G IN 3/4" CONDUIT BACK TO THE EXISTING PANELS AS INDICATED, PROVIDE A NEW 20A, SINGLE POLE CIRCUIT BREAKER FOR EACH CIRCUIT.
   ALL NEW CIRCUITS SHALL BE RUN AND CONNECTED TO THE NEW TURBIDIMETERS PRIOR TO DISCONNECTING THE EXISTING TURBIDIMETER CIRCUITS.
   PROVIDE NEW CONTROL WIRING TO EACH TURBIDIMETER BACK TO THE RESPECTIVE PLC PANEL, SEE THE CONTROL PANEL INSTRUMENTATION AND CONTROLS RISER DIAGRAMS ON DRAWINGS E-221 AND E-222 FOR ALL WIRING REQUIREMENTS.

6' 4' 2' 0 4' 8'
BAR SCALE
3/16" = 1'-0"
CHECK GRAPHIC SCALE BEFORE USING

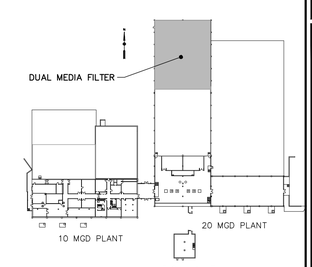

KEY PLAN

N.T.S.

ISSUE FOR BID

900 Washington Street, Suite 325N
Dedham, Massachusetts 02026
800.446.5518 | www.woodardcurran.com
WOODARD & CURRAN
COMMITMENT & INTEGRITY DRIVE RESULTS

THIS DOCUMENT IS THE PROPERTY OF WOODARD & CURRAN INC., AND ITS CLIENT. REPRODUCTION OR MODIFICATION WITHOUT WRITTEN PERMISSION IS PROHIBITED.

COMMONWEALTH OF MASSACHUSETTS
SHREY FITZPATRICK ELECTRICAL
NO. 50761
REGISTERED PROFESSIONAL ENGINEER

REV	DESCRIPTION	DATE
B	ISSUE FOR BID	3/11/15
A	FOR MASSDEP REVIEW	07/18/14

DESIGNED BY: SEH/GW
DRAWN BY: SEH/PO
CHECKED BY: AJF
224802 E-216.DWG

DUAL MEDIA FILTER
ELECTRICAL PLANS

LOWELL REGIONAL WATER UTILITY
LOWELL, MASSACHUSETTS

WATER SYSTEM IMPROVEMENTS

JOB NO.: 224802.20
DATE: MARCH 2015
SCALE: AS NOTED
SHEET: 43 OF 51

E-216

\\wc\shared\Projects\224802 Lowell MA - Water System Improvement PEF 2011\wip\Drawings\Electrical\224802 E-216.dwg, Mar 02, 2015 - 1:57pm

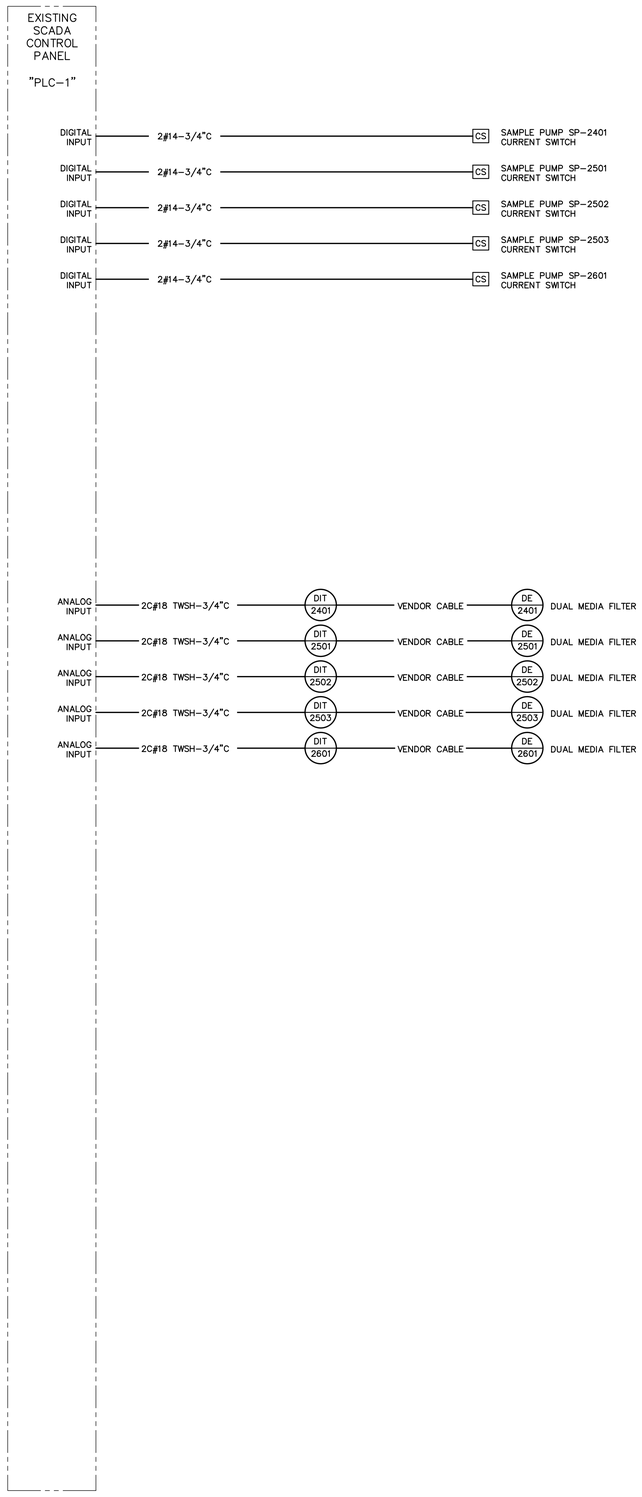

PLC-1 CONTROL PANEL INSTRUMENTATION & CONTROLS RISER DIAGRAM

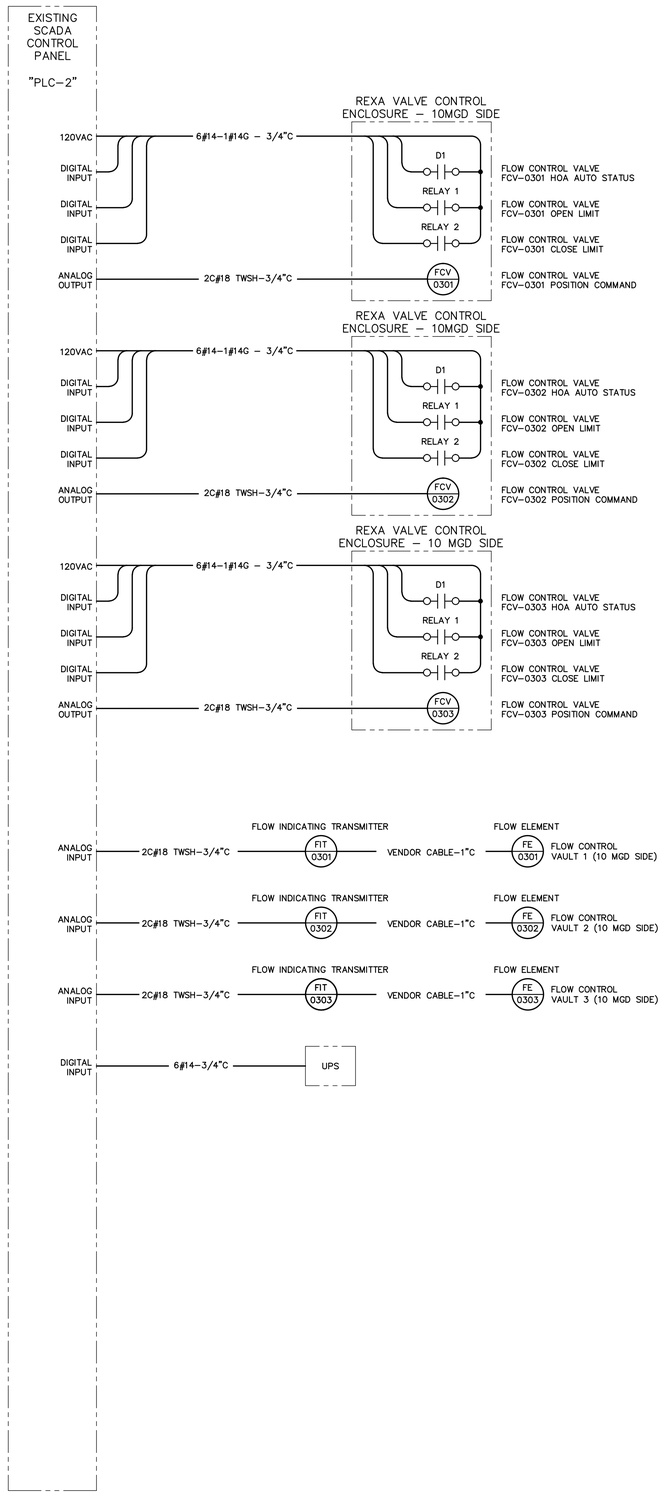

PLC-2 CONTROL PANEL INSTRUMENTATION & CONTROLS RISER DIAGRAM

ISSUE FOR BID

WOODARD & CURRAN
900 Washington Street, Suite 325N
Dedham, Massachusetts 02026
800.446.5518 | www.woodardcurran.com
COMMITMENT & INTEGRITY DRIVE RESULTS

THIS DOCUMENT IS THE PROPERTY OF WOODARD & CURRAN INC., AND ITS CLIENT. REPRODUCTION OR MODIFICATION WITHOUT WRITTEN PERMISSION IS PROHIBITED.

COMMONWEALTH OF MASSACHUSETTS
STEPHEN J. KIBREY
FITZPATRICK
ELECTRICAL
NO. 50761
APR. 17, 2015
REGISTERED PROFESSIONAL ENGINEER

REV	DESCRIPTION	DATE
A	FOR MASSDEP REVIEW	07/18/14
B	ISSUE FOR BID	3/11/15

DESIGNED BY: SEH/GW
DRAWN BY: SEH/PO
CHECKED BY: AJF
224802 E-221.DWG

WATER TREATMENT PLANT INSTRUMENTATION & CONTROLS RISER DIAGRAMS

LOWELL REGIONAL WATER UTILITY
LOWELL, MASSACHUSETTS

WATER SYSTEM IMPROVEMENTS

JOB NO.:224802.20
DATE: MARCH 2015
SCALE: AS NOTED
SHEET: 44 OF 51

E-221

24x36 SHEET
1:1

\\wc\shared\Projects\224802 Lowell MA - Water System Improvement PEF 2011\wip\Drawings\Electrical\224802 E-221.dwg, Mar 02, 2015 - 1:57pm

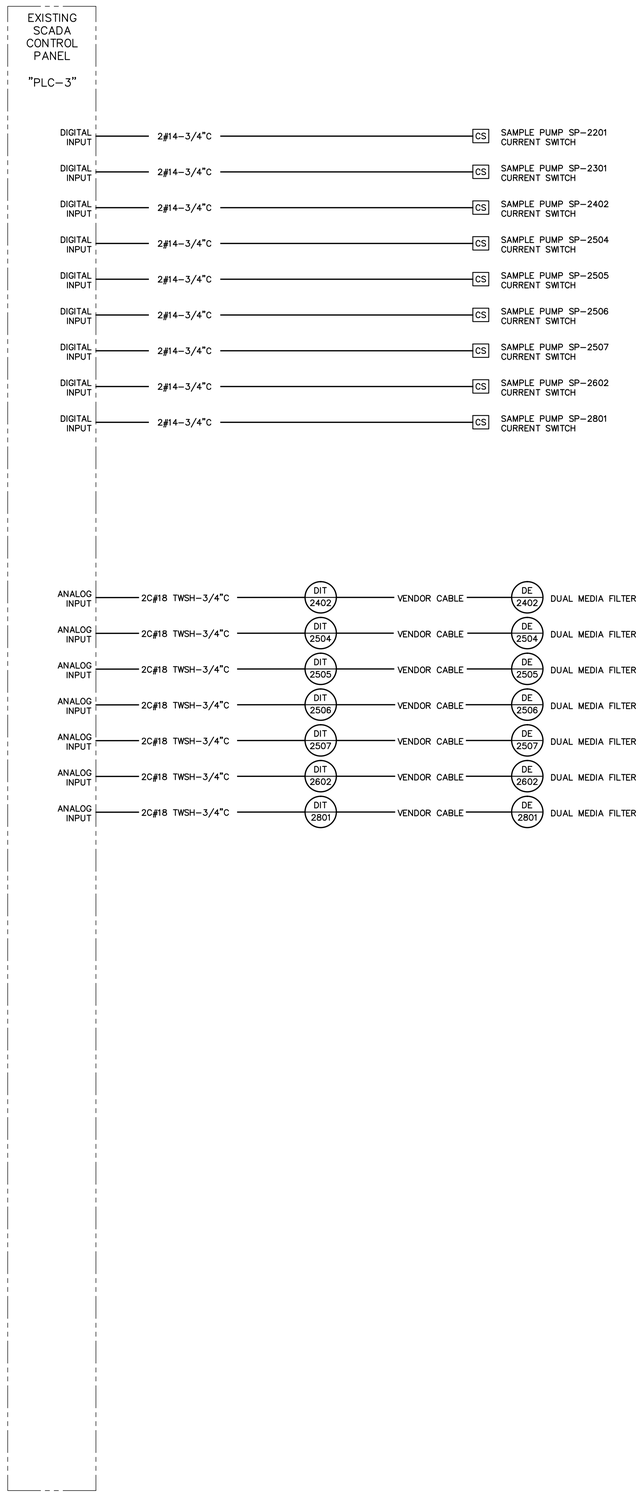

PLC-3 CONTROL PANEL INSTRUMENTATION & CONTROLS RISER DIAGRAM

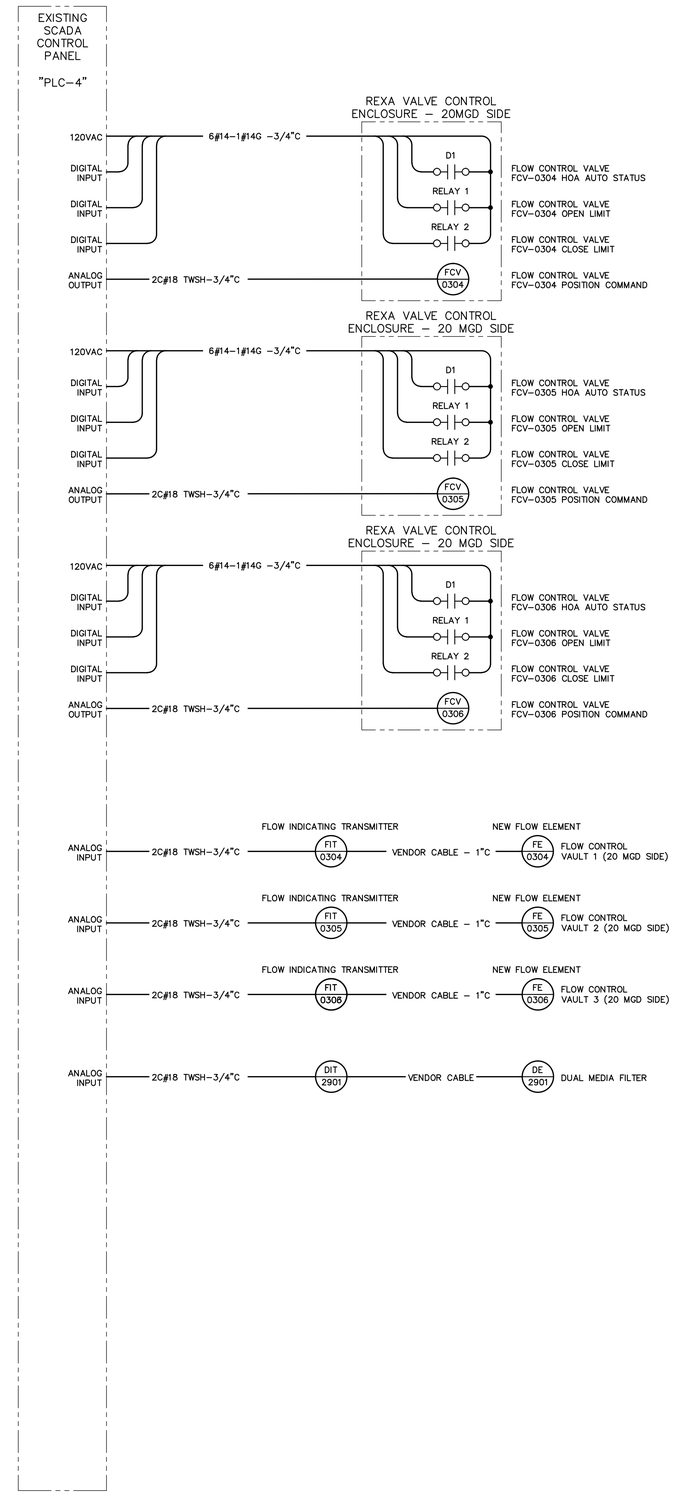

PLC-4 CONTROL PANEL INSTRUMENTATION & CONTROLS RISER DIAGRAM

ISSUE FOR BID

980 Washington Street, Suite 325N
Dedham, Massachusetts 02026
800.446.5518 | www.woodardcurran.com
WOODARD & CURRAN
COMMITMENT & INTEGRITY DRIVE RESULTS

THIS DOCUMENT IS THE PROPERTY OF WOODARD & CURRAN INC., AND ITS CLIENT. REPRODUCTION OR MODIFICATION WITHOUT WRITTEN PERMISSION IS PROHIBITED.

COMMONWEALTH OF MASSACHUSETTS
ANDREW J. FITZPATRICK
ELECTRICAL
NO. 50761
REGISTERED PROFESSIONAL ENGINEER
APR 17, 2015

REV	DESCRIPTION	DATE
B	ISSUE FOR BID	3/11/15
A	FOR MASSEP REVIEW	07/18/14

DESIGNED BY: SEH/GW
DRAWN BY: SEH/PO
CHECKED BY: AJF
224802 E-222.DWG

WATER TREATMENT PLANT
INSTRUMENTATION & CONTROLS
RISER DIAGRAMS

LOWELL REGIONAL WATER UTILITY
LOWELL, MASSACHUSETTS

WATER SYSTEM IMPROVEMENTS

JOB NO.:224802.20
DATE: MARCH 2015
SCALE: AS NOTED
SHEET: 45 OF 51

E-222

24x36 SHEET
1:1

\\wc\shared\Projects\224802 Lowell MA - Water System Improvement PEF 2011\wp\Drawings\Electrical\224802 E-222.dwg, Mar 02, 2015 - 1:57pm

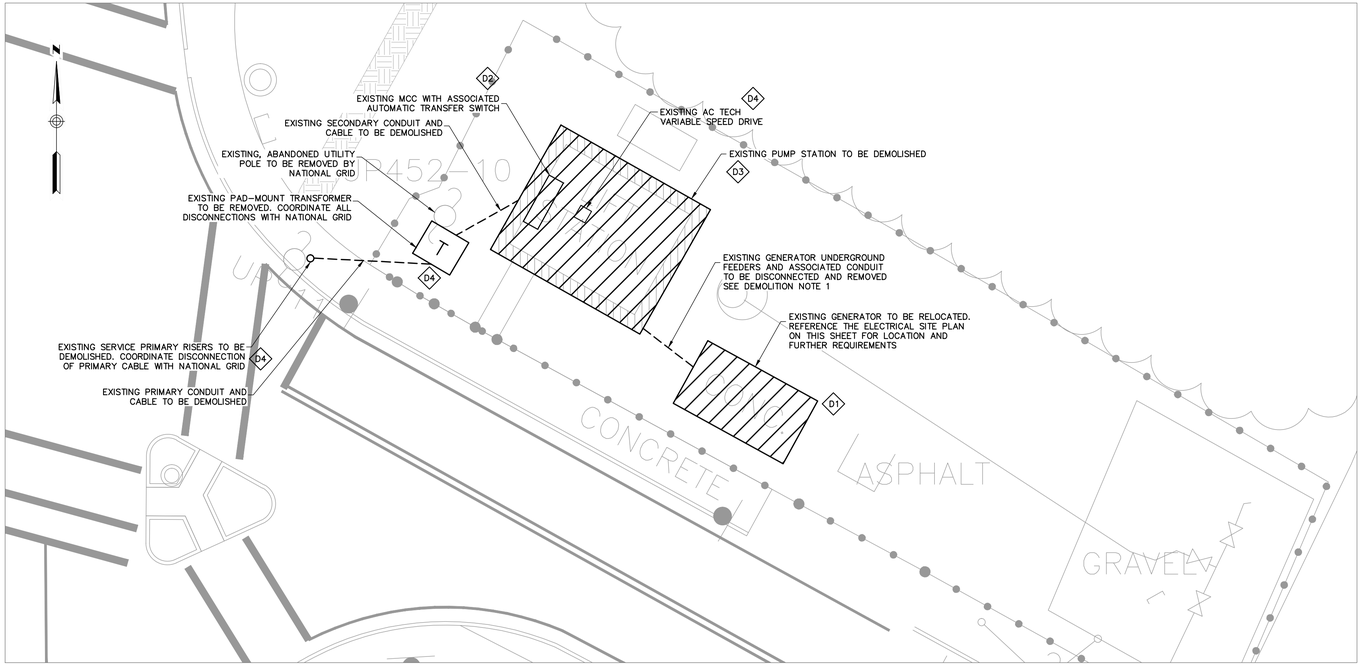

STACKPOLE ST. PUMP STATION ELECTRICAL SITE DEMOLITION PLAN

SCALE: 1" = 10'

10' 0 10' 20'

BAR SCALE
1" = 10'
CHECK GRAPHIC SCALE BEFORE USING

KEYED DEMOLITION NOTES:

D1. THE EXISTING OLYMPIAN 200KW, 480Y/277 VOLT, 3-PHASE, 4-WIRE GENERATOR SHALL BE RELOCATED TO MAKE ROOM FOR THE CONSTRUCTION OF THE PROPOSED PUMP STATION. THE GENERATOR RELOCATION SHALL BE BY THE GENERAL CONTRACTOR. THE ELECTRICAL CONTRACTOR SHALL DISCONNECT ALL WIRING PRIOR TO REMOVAL.

D2. RECONNECT EXISTING GENERATOR POWER AND CONTROLS TO EXISTING ATS DURING CONSTRUCTION OF NEW PUMP STATION, EXTEND (1) 4"C AND (2) 1"C BELOW GRADE AND EXTEND TO EXISTING EQUIPMENT AS REQUIRED TO RETURN TO PREVIOUS OPERATION DURING NEW PUMP STATION CONSTRUCTION.

D3. EXISTING UTILITY TRANSFORMER, SERVICE CONDUIT & CABLE, AND ALL ELECTRICAL ASSOCIATED WITH THE PUMP STATION, EXCEPT AS NOTED, SHALL BE DEMOLISHED AFTER SUBSTANTIAL COMPLETION AND CONFIRMED OPERATION OF THE EXISTING PUMP STATION.

D4. THE EXISTING VARIABLE SPEED DRIVE SHALL BE REMOVED AND RETURNED TO OWNER. COORDINATE WITH OWNER BEFORE REMOVAL TO ENSURE SAFE TRANSPORT TO OWNER'S STORAGE.

GENERAL NOTE:

1. ALL EXTERIOR WORK SHOWN IS BY THE EC, REFERENCE ONE LINE ON SHEET E-302 AND PLANS ON SHEET E-311 FOR PACKAGED PUMP STATION VENDOR SCOPE OF SERVICES.

KEYED NOTES:

1. COORDINATE GENERATOR POWER, CONTROL AND UTILITY SERVICE CONDUIT STUB UP LOCATIONS WITH ASSOCIATED EQUIPMENT INSTALLATION LOCATIONS.
2. PROVIDE (2) 4"C ONE FOR GENERATOR AND ONE SPARE, PROVIDE 1"C TO PANEL MP FOR GENERATOR AUXILIARY POWER (REFERENCE SHEET E-302 FOR POWER CABLE REQUIREMENTS), PROVIDE 1"C TO AREA OF ATS FOR CONTROL (REFERENCE SHEET E-321 FOR GENERATOR CONTROL WIRING REQUIREMENTS), ALSO PROVIDE 1"C SPARE.
3. PROVIDE A #2/0 BARE, SOFT-DRAWN, 19-STRAND, COPPER GROUND GRID AROUND THE TRANSFORMER PAD. PROVIDE (2) 5/8"X8' COPPER-WELD GROUND RODS AT TWO CORNERS OF GRID. REFERENCE THE NATIONAL GRID UCD GUIDE FOR FURTHER GROUND GRID REQUIREMENTS.
4. PROVIDE #2/0 BARE COPPER BOND FROM GROUND LOOP TO GROUND BUS WITHIN THE MCB.
5. PROVIDE #2/0 BARE COPPER BOND FROM FROM GROUND LOOP TO BUILDING.
6. PROVIDE #2/0 BARE COPPER BOND FROM GROUND LOOP TO SURGE SUPPRESSOR TERMINAL BOX.

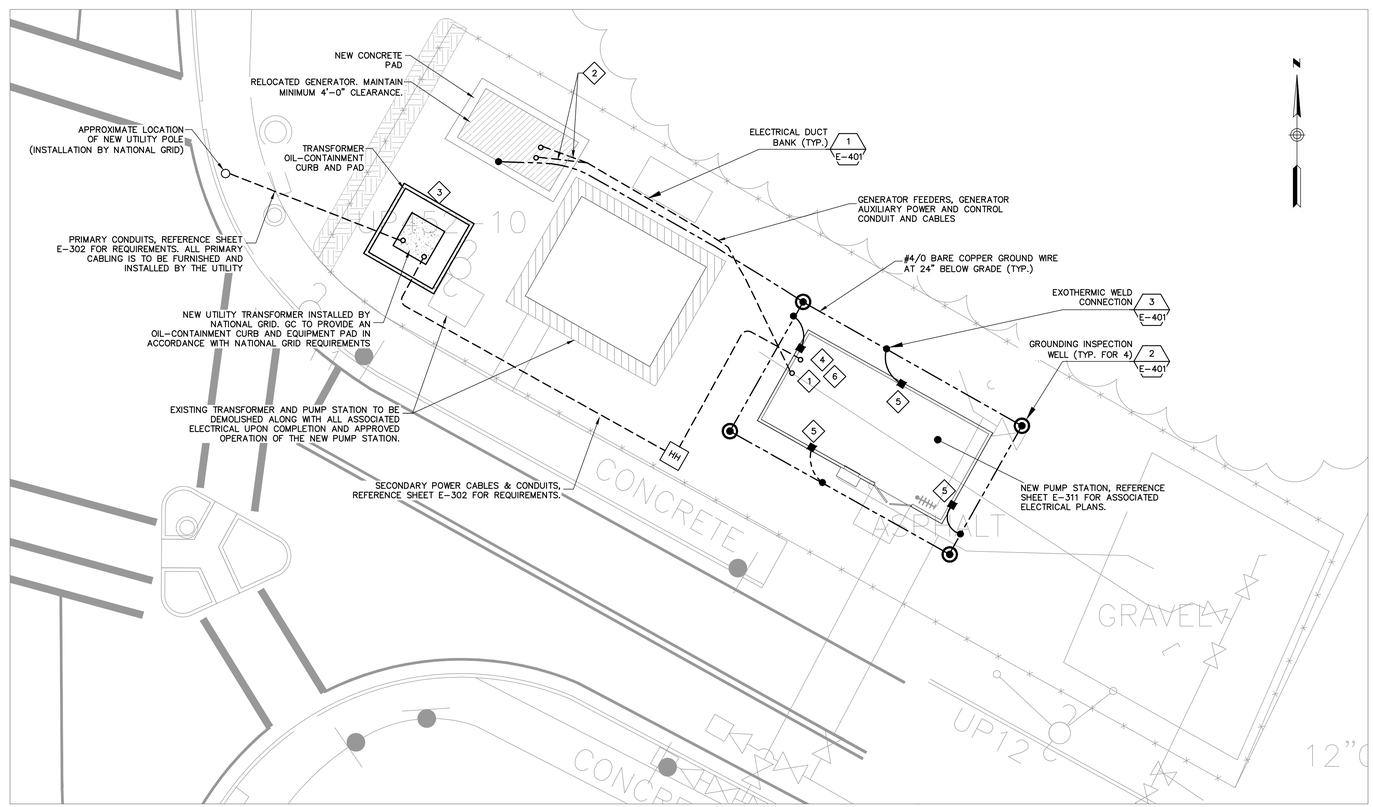

STACKPOLE ST. PUMP STATION ELECTRICAL SITE PLAN

SCALE: 1" = 10'

ISSUE FOR BID

24x36 SHEET
1:1

980 Washington Street, Suite 325N
Dedham, Massachusetts 02026
800.446.5518 | www.woodardcurran.com
WOODARD & CURRAN
COMMITMENT & INTEGRITY DRIVE RESULTS

THIS DOCUMENT IS THE PROPERTY OF WOODARD & CURRAN INC., AND ITS CLIENT. REPRODUCTION OR MODIFICATION WITHOUT WRITTEN PERMISSION IS PROHIBITED.

COMMONWEALTH OF MASSACHUSETTS
MICHAEL K. BREY FITZPATRICK
ELECTRICAL
NO. 50761
REGISTERED PROFESSIONAL ENGINEER
Mar 17, 2015

REV.	DESCRIPTION	DATE
B	ISSUE FOR BID	3/11/15
A	FOR MASSDEP REVIEW	07/18/14

DESIGNED BY: GW CHECKED BY: AJF
DRAWN BY: SEH/PO 224802 E-301.DWG

STACKPOLE STREET PUMP STATION
ELECTRICAL SITE PLANS

LOWELL REGIONAL WATER UTILITY
LOWELL, MASSACHUSETTS

WATER SYSTEM IMPROVEMENTS

JOB NO.:224802.20
DATE:MARCH 2015
SCALE: AS NOTED
SHEET: 46 OF 51

E-301

\\wc\Shared\Projects\224802 Lowell MA - Water System Improvement PEF 2011\Wip\Drawings\Electrical\224802 E-301.dwg, Mar 02, 2015 - 1:57pm

24x36 SHEET
1:1

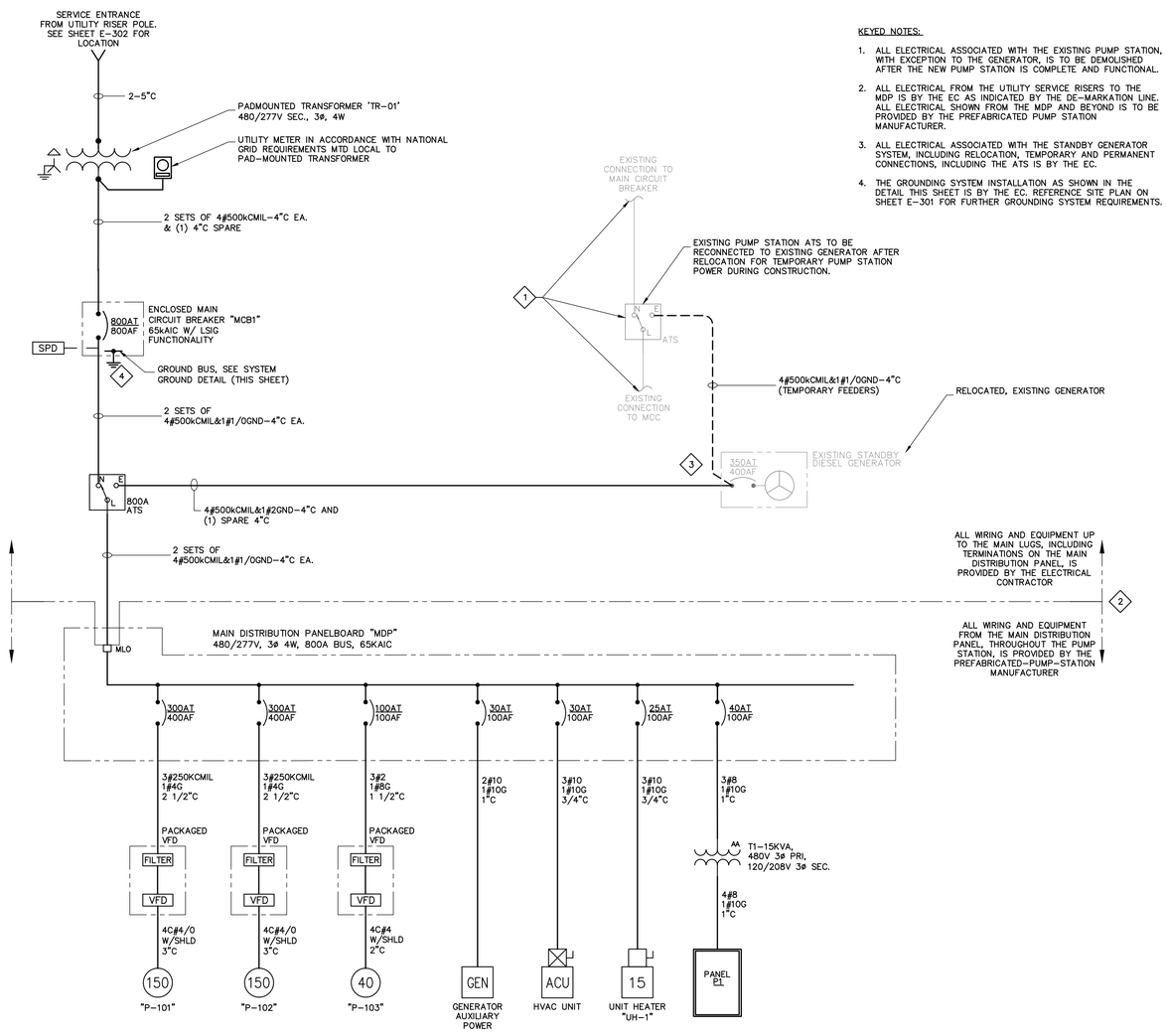

ONE-LINE DIAGRAM

KEYED NOTES:

1. ALL ELECTRICAL ASSOCIATED WITH THE EXISTING PUMP STATION, WITH EXCEPTION TO THE GENERATOR, IS TO BE DEMOLISHED AFTER THE NEW PUMP STATION IS COMPLETE AND FUNCTIONAL.
2. ALL ELECTRICAL FROM THE UTILITY SERVICE RISERS TO THE MDP IS BY THE EC AS INDICATED BY THE DE-MARKATION LINE. ALL ELECTRICAL SHOWN FROM THE MDP AND BEYOND IS TO BE PROVIDED BY THE PREFABRICATED PUMP STATION MANUFACTURER.
3. ALL ELECTRICAL ASSOCIATED WITH THE STANDBY GENERATOR SYSTEM, INCLUDING RELOCATION, TEMPORARY AND PERMANENT CONNECTIONS, INCLUDING THE ATS IS BY THE EC.
4. THE GROUNDING SYSTEM INSTALLATION AS SHOWN IN THE DETAIL THIS SHEET IS BY THE EC. REFERENCE SITE PLAN ON SHEET E-301 FOR FURTHER GROUNDING SYSTEM REQUIREMENTS.

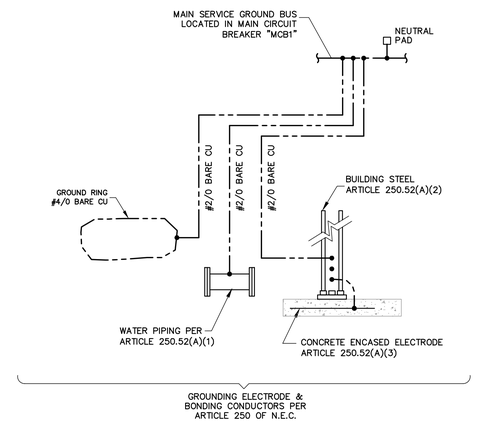

SYSTEM GROUNDING DETAIL

DIRECTORY	BRKR	POLE	CKT#	KVA	KVA LOADS A	KVA LOADS B	KVA LOADS C	KVA	CKT#	POLE	BRKR	DIRECTORY
RCPTS - INTERIOR	20	1	1	0.36	0.86			0.50	2	1	15	SMOKE DETECTORS
DEHUMIDIFIER RCPT	20	1	3	0.50		0.70		0.20	4	1	15	FLOW METER 'RT-100'
INTERIOR LIGHTING	20	1	5	0.50			1.25	0.75	6	1	30	SCADA CONTROL PANEL
RCPTS - EXTERIOR	20	1	7	0.36	0.84			0.48	8	1	15	SUMP PUMP RCPT
			9			0.00			10			
			11				0.00		12			
			13		0.00				14			
			15			0.00			16			
			17				0.00		18			
			19		0.00				20			
			21			0.00			22			
			23				0.00		24			
			25		0.00				26			
			27			0.00			28			
			29				0.00		30			
				SUBTOTAL	1.70	0.70	1.25	SUBTOTAL				

VOLTAGE:	120/208	TOTAL kVA	3.65	PANEL NAME:	P1
MAIN BREAKER:	50	TOTAL AMPS	10	LOCATION:	STACKPOLE PUMP STATION
BUSES:	100			MOUNTING:	SURFACE
PH & WIRES:	3PH 4W			AIC RATING:	22 kAIC
NOTES:					

PANEL SCHEDULE
PANEL "P1"

ISSUE FOR BID

980 Washington Street, Suite 325N
Dedham, Massachusetts 02026
800.446.5518 | www.woodardcurran.com
WOODARD & CURRAN
COMMITMENT & INTEGRITY DRIVE RESULTS

THIS DOCUMENT IS THE PROPERTY OF WOODARD & CURRAN INC., AND ITS CLIENT. REPRODUCTION OR MODIFICATION WITHOUT WRITTEN PERMISSION IS PROHIBITED.

COMMONWEALTH OF MASSACHUSETTS
JAMES A. KIBREY
FITZPATRICK
ELECTRICAL
NO. 50761
REGISTERED PROFESSIONAL ENGINEER

REV	DESCRIPTION	DATE
B	ISSUE FOR BID	3/11/15
A	FOR MASSDEP REVIEW	07/18/14

DESIGNED BY: SEH/GW
DRAWN BY: SEH/PO
CHECKED BY: AJF
224802 E-302.DWG

STACKPOLE STREET PUMP STATION
ONE LINE & PANEL SCHEDULE

LOWELL REGIONAL WATER UTILITY
LOWELL, MASSACHUSETTS

WATER SYSTEM IMPROVEMENTS

JOB NO.:224802.20
DATE: MARCH 2015
SCALE: AS NOTED
SHEET: 47 OF 51

E-302

\\wc\shared\Projects\224802 Lowell MA - Water System Improvement PEF 2011\wip\Drawings\Electrical\224802 E-302.dwg, Mar 02, 2015 - 1:57pm

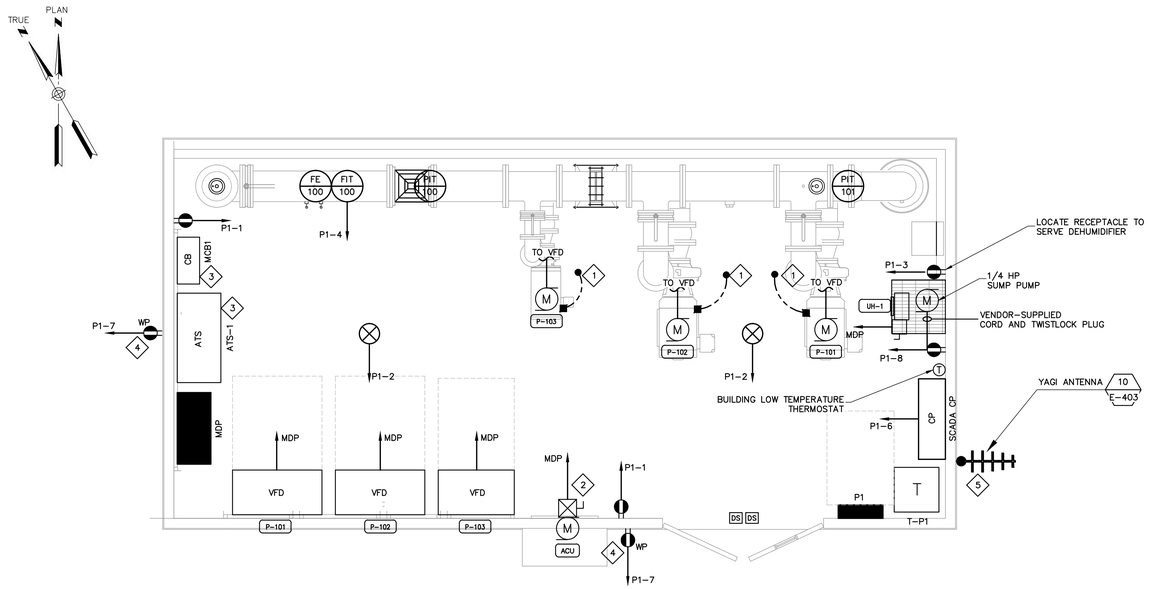

STACKPOLE ST. PUMP STATION
ELECTRICAL POWER & CONTROLS PLAN

SCALE: 3/8" = 1'-0"

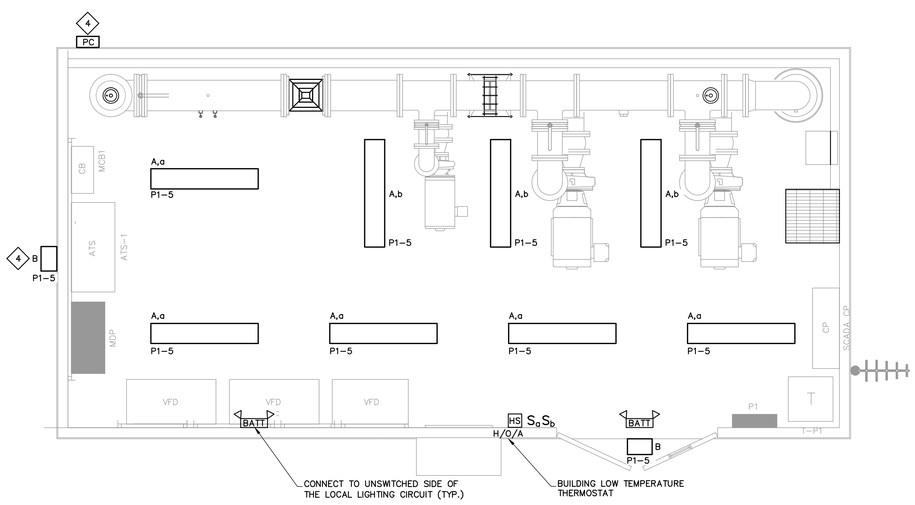

STACKPOLE ST. PUMP STATION
LIGHTING PLAN

SCALE: 3/8" = 1'-0"

GENERAL NOTES:

1. EQUIPMENT SHOWN IS DIAGRAMMATIC, COORDINATE ALL EQUIPMENT LOCATIONS WITH OTHER DISCIPLINES IN THE FIELD.
2. REFERENCE INSTRUMENTATION & CONTROLS RISER DIAGRAM ON SHEET E-321 FOR CONTROL CABLE AND CONDUIT NOT SHOWN.
3. REFERENCE ONE-LINE DIAGRAM ON SHEET E-302 FOR CABLE AND CONDUIT NOT SHOWN.

KEYED NOTES:

1. PROVIDE #3 BARE COPPER GROUND CONNECTION FROM MOTOR CASING TO BUILDING STEEL. (TYP. FOR THREE MOTORS)
2. COORDINATE FINAL HVAC UNIT 'ACU' POWER AND CONTROL REQUIREMENTS WITH FINAL SELECTED EQUIPMENT.
3. MCB AND ATS PROVIDED BY THE EC, ALL REMAINING ELECTRICAL SHOWN ON PUMP STATION INTERIOR, UNLESS OTHERWISE NOTED IS PROVIDED BY THE PACKAGED PUMP STATION MANUFACTURER.
4. EXTERIOR RECEPTACLES, LIGHTING FIXTURES, PHOTOCELL, LIGHTING HOA SWITCH AND ALL ASSOCIATED CONDUIT AND CABLING EXTENDING TO PANEL P1 IS BY THE EC.
5. ALL WORK ASSOCIATED WITH THE BUILDING MOUNTED ANTENNA IS TO BE PROVIDED BY THE EC.

4' 3' 2' 1' 0 3' 6'

BAR SCALE
3/8" = 1'-0"
CHECK GRAPHIC SCALE BEFORE USING

ISSUE FOR BID

900 Washington Street, Suite 325N
Dedham, Massachusetts 02026
800.446.5518 | www.woodardcurran.com

COMMITMENT & INTEGRITY DRIVE RESULTS

WOODARD & CURRAN

THIS DOCUMENT IS THE PROPERTY OF WOODARD & CURRAN INC., AND ITS CLIENT. REPRODUCTION OR MODIFICATION WITHOUT WRITTEN PERMISSION IS PROHIBITED.

COMMONWEALTH OF MASSACHUSETTS
ELIZABETH A. KIBREY
FITZPATRICK
ELECTRICAL
NO. 50761
REGISTERED PROFESSIONAL ENGINEER
Apr 17, 2015

REV	DATE	DESCRIPTION
A	07/18/14	FOR MASSDEP REVIEW
B	3/11/15	ISSUE FOR BID

DESIGNED BY: SEH/GW
DRAWN BY: SEH/RO
CHECKED BY: AJF
224802 E-311.DWG

STACKPOLE STREET PUMP STATION ELECTRICAL PLANS

LOWELL REGIONAL WATER UTILITY
LOWELL, MASSACHUSETTS

WATER SYSTEM IMPROVEMENTS

JOB NO.:224802.20
DATE: MARCH 2015
SCALE: AS NOTED
SHEET: 48 OF 51

E-311

24x36 SHEET
1:1

\\wc\shared\Projects\224802 Lowell MA - Water System Improvement PEF 2011\wip\Drawings\Electrical\224802 E-311.dwg, Mar 02, 2015 - 1:57pm

24x36 SHEET
1:1

LIGHT FIXTURE SCHEDULE

ALL FIXTURES SHALL BE FURNISHED COMPLETE WITH ALL HARDWARE, LAMPS, HANGERS, FITTINGS, ETC., FOR A COMPLETE AND PROPER INSTALLATION.

TYPE	MANUFACTURER	CATALOG NUMBER	LAMP TYPE	LAMP WATT	LAMP NO.	VOLTAGE	MTG.	BALLAST FACTOR	REMARKS/RECOMMENDATIONS
A	4' 2-LAMP ENCLOSED AND GASKETED								
	COLUMBIA	LUN4-232-EU-SSL	F32T8	32	2	120/277	SUR	0.88	SURFACE MOUNT TO CEILING.
B	EXTERIOR, WALL-MOUNTED LED ENTRY LIGHT W/ TYPE IV DISTRIBUTION								
	HUBBELL	LCC-12LU-5K-1	LED	12	12 LED	120/277	WALL	NA	COORDINATE MOUNTING HEIGHT WITH ARCHITECTURAL ELEVATIONS.
C	EXTERIOR, SURFACE-MOUNTED, LED FLOODLIGHT								
	PHILIPS - STONCO	STKLPF4T-8	LED	105	4	120/277	SUR	NA	COORDINATE MOUNTING HEIGHT WITH ARCHITECTURAL ELEVATIONS.
BATT	HARSH-ENVIRONMENT, ENCLOSED AND GASKETED EMERGENCY LIGHT								
	DUAL-LITE	N4X4	HO INCANDESCENT	7.2W	2	120/277	WALL MOUNTED AT 9' AFF	NA	

LIGHT FIXTURE SCHEDULE

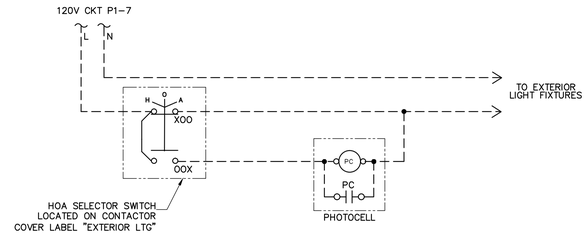

EXTERIOR LIGHTING CONTROL WIRING DIAGRAM

SCALE: N.T.S.

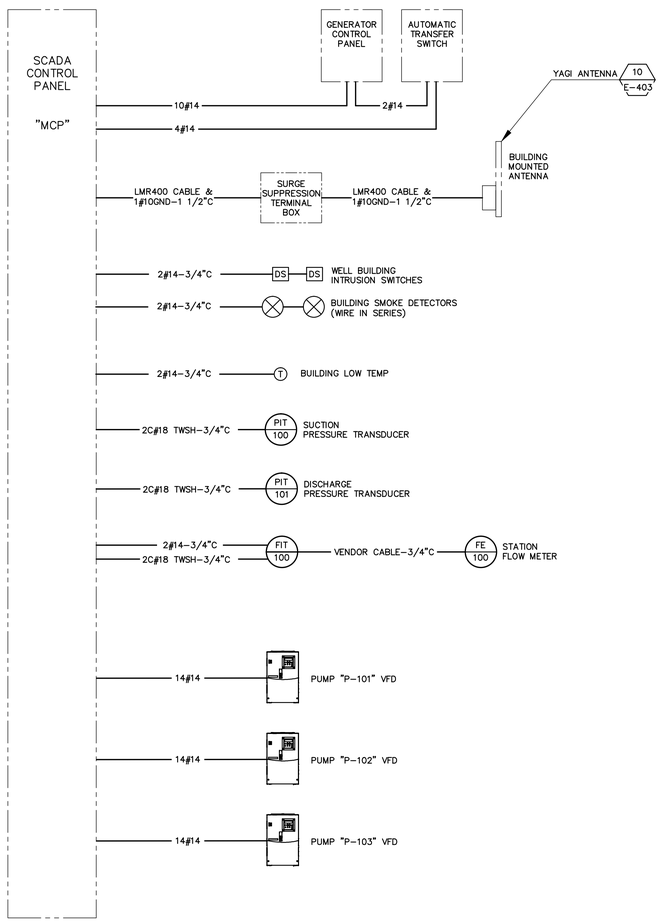

BUILDING SYSTEMS, INSTRUMENTATION & CONTROL RISER DIAGRAM

SCALE: N.T.S.

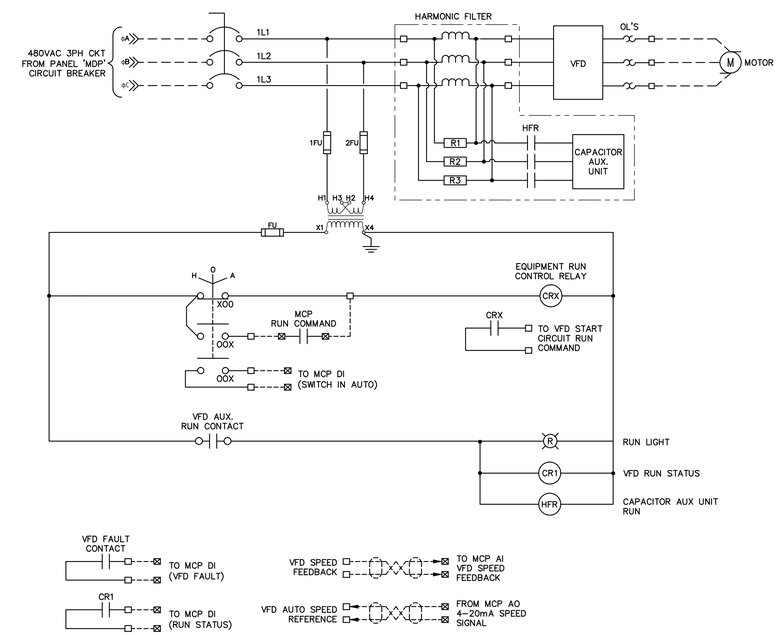

TYPICAL PUMP WIRING DIAGRAM ("P-101", "P-102" & "P-103")

SCALE: N.T.S.

ISSUE FOR BID

900 Washington Street, Suite 325N
Dedham, Massachusetts 02026
800.446.5518 | www.woodardcurran.com

WOODARD & CURRAN

COMMITMENT & INTEGRITY DRIVE RESULTS

THIS DOCUMENT IS THE PROPERTY OF WOODARD & CURRAN INC., AND ITS CLIENT. REPRODUCTION OR MODIFICATION WITHOUT WRITTEN PERMISSION IS PROHIBITED.

COMMONWEALTH OF MASSACHUSETTS
ANDREW J. FITZPATRICK
ELECTRICAL
NO. 50761
Apr 17, 2015
REGISTERED PROFESSIONAL ENGINEER

REV	DESCRIPTION	DATE
B	ISSUE FOR BID	3/11/15
A	FOR MASSDEP REVIEW	07/18/14

DESIGNED BY: SEH/GW
DRAWN BY: SEH/PO
CHECKED BY: AJF
224802 E-321.DWG

STACKPOLE STREET PUMP STATION BUILDING SYSTEMS, INSTRUMENTATION & CONTROLS RISER DIAGRAM

LOWELL REGIONAL WATER UTILITY
LOWELL, MASSACHUSETTS

WATER SYSTEM IMPROVEMENTS

JOB NO.:224802.20
DATE: MARCH 2015
SCALE: AS NOTED
SHEET: 49 OF 51

E-321

\\we\shared\Projects\224802 Lowell MA - Water System Improvement PEF 2011\wip\Drawings\Electrical\224802 E-321.dwg, Mar 02, 2015 - 1:57pm

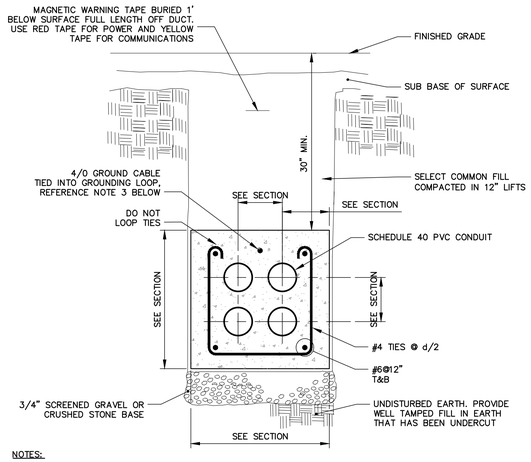

NOTES:

1. PROVIDE MINIMUM 1'-0" SPACING WITHIN DUCTBANK BETWEEN POWER AND CONTROL/COMMUNICATIONS CONDUITS.
2. QUANTITY OF DUCTS SHOWN IN DETAILS ABOVE IS SHOW DIAGRAMMATICALLY ONLY TO SHOW GENERAL CONSTRUCTION AND SPACING REQUIREMENTS. QUANTITY AND SIZE OF CONDUITS SHALL BE AS IDENTIFIED IN THE DUCTBANK SCHEDULE.
3. INSTALL A 4/0 BARE STRANDED COPPER GROUND CABLE ADJACENT TO EACH DUCT BANK ENVELOPE FOR THE ENTIRE LENGTH. GROUND CONDUCTOR SHALL BE BONDED TO REINFORCING STEEL (REBAR) APPROXIMATELY EVERY 50'. GROUND CONDUCTOR SHALL BE BONDED TO ALL MANHOLES, HANDHOLES, AND ALL BUILDINGS ASSOCIATED WITH THE CORRESPONDING DUCTBANKS.
4. ALL EXCAVATION, BACKFILL, SURFACE RESTORATION, AND CONCRETE AND REBAR WORK SHALL BE COMPLETED BY THE GENERAL CONTRACTOR. CONDUIT AND CONDUIT SPACERS/SUPPORTS SHALL BE FURNISHED AND INSTALLED BY THE ELECTRICAL SUBCONTRACTOR. MANHOLES AND HANDHOLES SHALL BE FURNISHED AND INSTALLED BY THE GENERAL CONTRACTOR. CONTRACTORS SHALL COORDINATE WORK.

1 / E-302 REINFORCED CONCRETE ENCASED UNDERGROUND DUCTBANK DETAIL

SCALE: N.T.S.

NOTES:

1. INSPECTION WELLS IN ROADWAYS SHALL ADHERE TO AASHTO H20 LOADING REQUIREMENTS.
2. WELLS SHALL BE FLUSH TYPE PRECAST CONCRETE, OR POLYMER CONCRETE PER AREA OF INSTALLATION. PROVIDE BOLTED DOWN COVERS WITH DESCRIPTION "GROUND ROD". PROVIDE STEEL COVERS FOR WELLS IN TRAFFIC AREAS.
3. TOP OF GROUND INSPECTION WELL SHALL BE LEVEL WITH FINISHED GRADE.

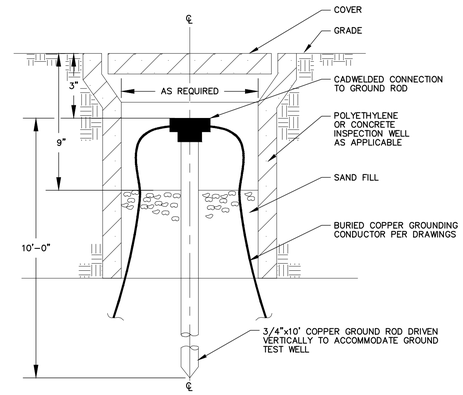

2 / E-302 TYPICAL GROUND INSPECTION WELL DETAIL

SCALE: N.T.S.

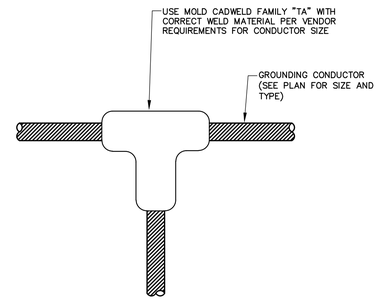

3 / E-302 TEE THERMOWELD CONNECTION

SCALE: N.T.S.

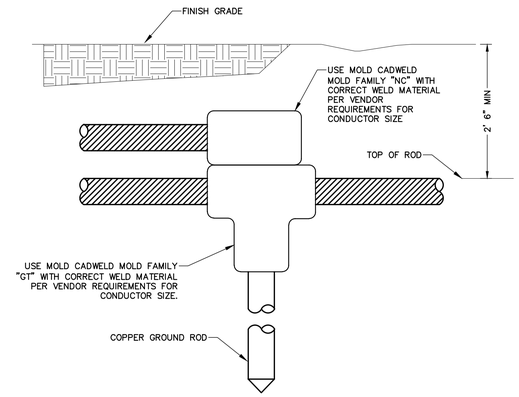

4 / E-302 GROUND ROD INSTALLATION

SCALE: N.T.S.

NOTE:

APPLICABLE FOR ALL IN-SLAB AREAS UNLESS NOTED OTHERWISE.

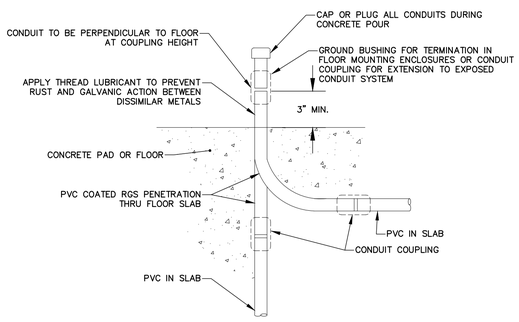

5 / E-302 TYPICAL IN-SLAB CONDUIT STUB-UP DETAIL

SCALE: N.T.S.

NOTE:

APPLICABLE FOR ALL IN-SLAB AREAS UNLESS NOTED OTHERWISE.

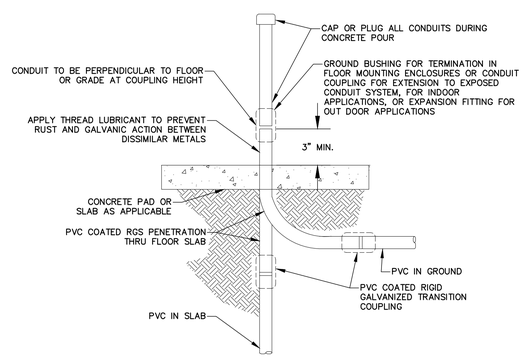

6 / E-302 TYPICAL UNDERGROUND CONDUIT STUB-UP DETAIL

SCALE: N.T.S.

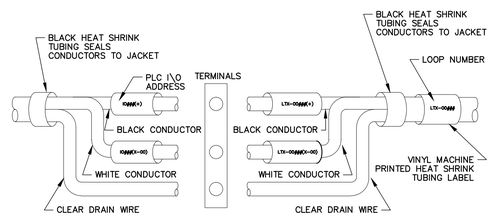

7 / NA WIRING TERMINATION DETAIL

SCALE: N.T.S.

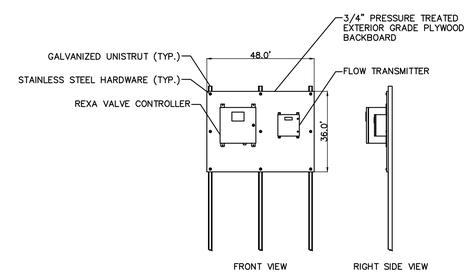

8 / E-201 VALVE VAULT EQUIPMENT STAND DETAIL

SCALE: N.T.S.

ISSUE FOR BID

900 Washington Street, Suite 325N
Dedham, Massachusetts 02026
800.446.5518 | www.woodardcurran.com
WOODARD & CURRAN
COMMITMENT & INTEGRITY DRIVE RESULTS

THIS DOCUMENT IS THE PROPERTY OF WOODARD & CURRAN INC., AND ITS CLIENT. REPRODUCTION OR MODIFICATION WITHOUT WRITTEN PERMISSION IS PROHIBITED.

COMMONWEALTH OF MASSACHUSETTS
STEVEN R. KIBREY
FITZPATRICK
ELECTRICAL
NO. 50761
REGISTERED PROFESSIONAL ENGINEER
Apr 7, 2015

REV	DESCRIPTION	DATE
B	ISSUE FOR BID	3/11/15
A	FOR MASSDEP REVIEW	07/18/14

DESIGNED BY: SEH/GW | CHECKED BY: AJF
DRAWN BY: SEH/PO | 224802 E-401.DWG

ELECTRICAL DETAILS

LOWELL REGIONAL WATER UTILITY
LOWELL, MASSACHUSETTS

WATER SYSTEM IMPROVEMENTS

JOB NO.: 224802.20
DATE: MARCH 2015
SCALE: AS NOTED
SHEET: 50 OF 51

E-401

\\wc\shared\Projects\224802 Lowell MA - Water System Improvement PEF 2011\wip\Drawings\Electrical\224802 E-401.dwg, Mar 02, 2015 - 1:57pm

24x36 SHEET
1:1

ANTENNA INSTALLATION BILL OF MATERIAL

ITEM	QTY.	MANUFACTURER	PART NUMBER	DESCRIPTION	DESIGNATION
1	1	LAIRD TECHNOLOGIES	Y-4505	YAGI-DIRECTIONAL ANTENNA	
2					
3	1	POLYPHASER	IS-50NX-C1	ANTENNA SURGE ARRESTOR	
4	30 FT.	TIMES MICROWAVE SYS.	LMR-400	ANTENNA CABLE	ANTENNA TO SURGE SUPPRESSOR TO RADIO
5					
6					
7	3	TIMES MICROWAVE SYS.	EZ-400-NMH-D	TYPE N MALE CONNECTOR FOR LMR-400 CABLE	
8	1	TIMES MICROWAVE SYS.	EZ-400-NMH-RA	TYPE N MALE RIGHT ANGLE CONNECTOR	
9					
10					
11	1	HOFFMAN	A12R106HCR	JUNCTION BOX, NEMA 3R WITH PADLOCK PROVISION, 12" X 10" X 6"	SURGE SUPPRESSOR TERMINAL BOX (OR EQUAL)
12	1	HOFFMAN	A12N10P	JUNCTION BOX SUB PANEL	SURGE SUPPRESSOR TERMINAL BOX (OR EQUAL)
13					
14					
15					

ANTENNA INSTALLATION & GROUNDING NOTES:

ANTENNA AND RELATED EQUIPMENT SHALL BE INSTALLED ACCORDING TO THE FOLLOWING GUIDELINES AND PER "ANTENNA MOUNTING & GROUNDING DETAIL" ON THIS SHEET. DETAIL IS SHOWN AS A GUIDE ONLY. ACTUAL INSTALLATION MAY VARY DEPENDING ON SITE CONDITIONS AND LOCAL CODES. SITE SHALL BE EVALUATED, CONDITIONS VERIFIED AND ADJUSTMENTS MADE ACCORDINGLY.

1. ANTENNA CABLE SHALL RUN THROUGH WEATHER HEAD ON GALVANIZED STEEL CONDUIT TO THE JUNCTION BOX, WHERE IT CONNECTS TO THE "POLYPHASER" SURGE SUPPRESSOR. POLYPHASER SHALL BE PROPERLY SECURED TO INSIDE OF BOX AND GROUNDED WITH A #6 COPPER GROUND WIRE. #6 GROUND WIRE SHALL EXIT JUNCTION BOX THROUGH 3/4" GALVANIZED STEEL CONDUIT AND SHALL BE BONDED TO A DRIVEN GROUND ROD OR OTHER ACCEPTABLE GROUNDING GRID. AN ADDITIONAL #6 COPPER GROUND WIRE SHALL BE CONNECTED FROM GROUND ROD TO ELECTRICAL SERVICE ENTRANCE GROUND. ANTENNA CABLE SHALL EXIT JUNCTION BOX FROM POLYPHASER THROUGH GALVANIZED STEEL CONDUIT TO SCADA PANEL. CARE SHOULD BE TAKEN TO ENSURE ANY ENTRIES AND EXITS OF JUNCTION BOX & SCADA PANEL ARE PROPERLY SEALED (WITH WEATHERPROOF HUBS) TO MAINTAIN NEMA RATING OF ENCLOSURE(S). ANTENNA CABLE CONNECTION AT THE ANTENNA SHALL BE WRAPPED IN "ALL-WEATHER VINYL INSULATING TAPE. (3M PART #SUPER 33+ OR APPROVED EQUAL). PROVIDE GUY WIRES ON ANTENNA MAST (CONDUIT) AS NECESSARY FOR STABILITY.
2. THE FOLLOWING ITEMS SHALL BE FURNISHED AND INSTALLED BY CONTRACTOR.
   - ALL ITEMS IN BILL OF MATERIAL SHOWN ON THIS DRAWING.
   - WEATHER HEAD
   - 2" GRS CONDUIT TO SURGE SUPPRESSOR TERMINAL BOX
   - #6 STRANDED COPPER GROUND WIRE
   - 5/8" X 8' COPPER CLAD GROUND ROD
   - 3/4" GRS CONDUIT FROM SURGE SUPPRESSOR TERMINAL BOX TO GROUND ROD
   - 1 1/4" GRS CONDUIT FROM SURGE SUPPRESSOR TERMINAL BOX TO SCADA PANEL
   - ALL RELATED HARDWARE FOR ABOVE ITEMS (CONDUIT STRAPS, WEATHER PROOF HUBS, BUSHINGS ETC.)
3. CONTRACTOR SHALL FIELD VERIFY SITE CONDITIONS AND MAKE NECESSARY ADJUSTMENTS PRIOR TO AND DURING INSTALLATION.
4. CONTRACTOR SHALL COORDINATE WITH OWNER PRIOR TO INSTALLING GROUND ROD.

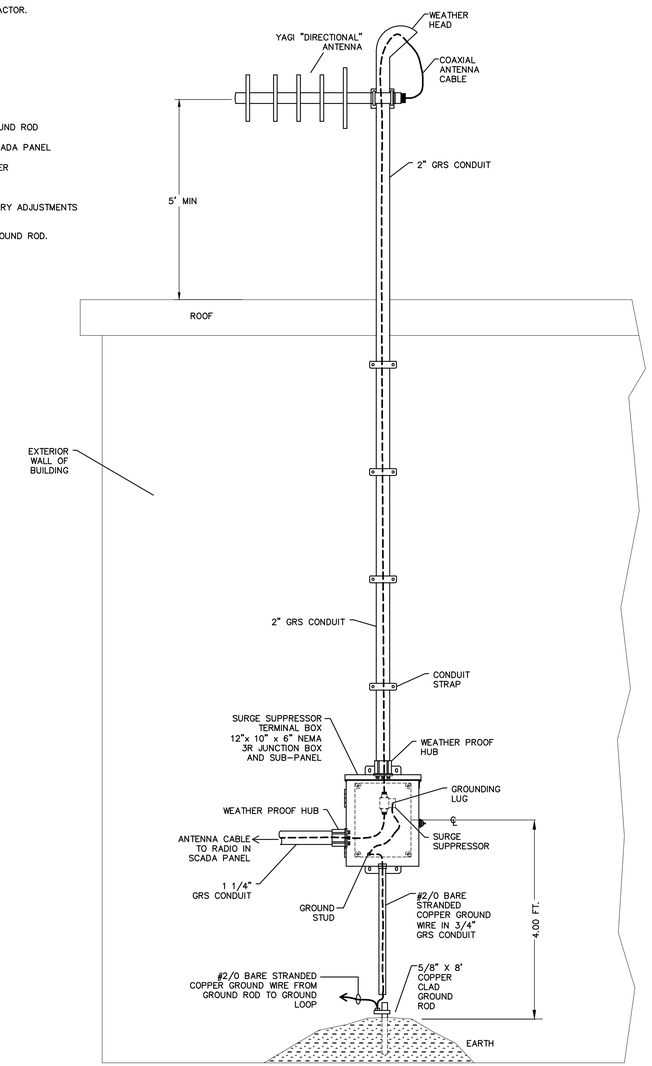

10 / E-311 ANTENNA INSTALLATION DETAIL

SCALE: N.T.S.

ISSUE FOR BID

900 Washington Street, Suite 325N
Dedham, Massachusetts 02026
800.446.5518 | www.woodardcurran.com
WOODARD & CURRAN
COMMITMENT & INTEGRITY DRIVE RESULTS

THIS DOCUMENT IS THE PROPERTY OF WOODARD & CURRAN INC., AND ITS CLIENT. REPRODUCTION OR MODIFICATION WITHOUT WRITTEN PERMISSION IS PROHIBITED.

COMMONWEALTH OF MASSACHUSETTS
ALBERT J. FITZPATRICK
ELECTRICAL
NO. 50761
Apr. 17, 2015
REGISTERED PROFESSIONAL ENGINEER

REV	DATE	DESCRIPTION
B	3/11/15	ISSUE FOR BID
A	07/18/14	FOR MASSDEP REVIEW

DESIGNED BY: SEH/GW CHECKED BY: AJF
DRAWN BY: SEH/RO 224802-E-402.DWG

STACKPOLE BOOSTER STATION
ANTENNA INSTALLATION
DETAILS

LOWELL REGIONAL WATER UTILITY
LOWELL, MASSACHUSETTS

WATER SYSTEM IMPROVEMENTS

JOB NO.:224802.20
DATE: MARCH 2015
SCALE: AS NOTED
SHEET: 51 OF 51

E-402

\\wc\shared\Projects\224802 Lowell MA - Water System Improvement PEF 2011\wip\Drawings\Electrical\224802-E-402.dwg, Mar 02, 2015 - 1:57pm