LOWELL REGIONAL WATER UTILITY
LOWELL, MASSACHUSETTS

WATER SYSTEM IMPROVEMENTS

INSTRUMENTATION & CONTROLS

COMMONWEALTH OF MASSACHUSETTS
JONATHON H. GRANT
CONTROL SYSTEM
No. 49800
REGISTERED PROFESSIONAL ENGINEER

3-4-2015

DEP PROJECT NO. DWSRF-3531
CONTRACT NO. 2
PROJECT NO. 224802.20

IFB #15-71

MARCH 2015

PROJECT LOCATION MAP

50 0 50 100
scale mile

WOODARD & CURRAN

980 Washington St. | Dedham, MA 02026
800.446.5518 | www.woodardcurran.com

COMMITMENT & INTEGRITY DRIVE RESULTS

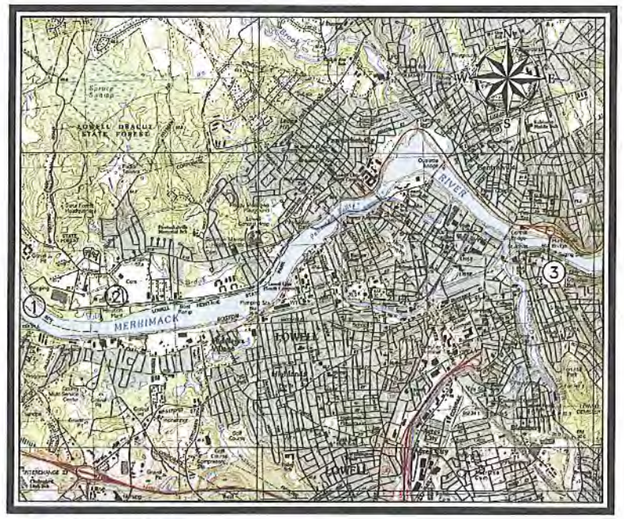

PROJECT LOCATIONS

1. RAW WATER PUMP STATION
2. WATER TREATMENT PLANT
3. STACKPOLE STREET PUMP STATION SITE

SITE LOCATION MAP

SCALE: 1:31250

SOURCE
U.S.G.S. QUADRANGLE, LOWELL, MA,
PHOTO REVISED 1987, 15 MINUTE SERIES

ISSUE FOR BID

\\wc\shared\Projects\224802 Lowell MA - Water System Improvement PEF 2011\wip\Drawings\Controls\224802-COVER-CONTROLS.dwg, Mar 03, 2015 - 1:52pm

SHEET INDEX

CONTROL SYSTEM MODIFICATIONS

I-001 CONTROL SYSTEM MODIFICATIONS SHEET INDEX
I-102 PLC-1 CONTROL PANEL LAYOUT MODIFICATIONS
I-104 PLC-1 CONTROL PANEL POWER DISTRIBUTION MODIFICATIONS
I-105 PLC-1 CONTROL PANEL COMMUNICATIONS MODIFICATIONS
I-106 PLC-1 CONTROL PANEL DIGITAL INPUTS MODIFICATIONS
I-107 PLC-1 CONTROL PANEL DIGITAL OUTPUTS MODIFICATIONS
I-108 PLC-1 CONTROL PANEL ANALOG INPUTS MODIFICATIONS
I-111 PLC-1 CONTROL PANEL MOTOR CIRCUIT WIRING MODIFICATIONS
I-202 PLC-2 CONTROL PANEL LAYOUT (EXTERIOR) MODIFICATIONS
I-205 PLC-2 CONTROL PANEL POWER DISTRIBUTION MODIFICATIONS
I-206 PLC-2 CONTROL PANEL COMMUNICATIONS MODIFICATIONS
I-208 PLC-2 CONTROL PANEL DIGITAL INPUTS MODIFICATIONS
I-209 PLC-2 CONTROL PANEL DIGITAL OUTPUTS MODIFICATIONS
I-211 PLC-2 CONTROL PANEL ANALOG INPUTS MODIFICATIONS
I-212 PLC-2 CONTROL PANEL ANALOG OUTPUTS MODIFICATIONS
I-213 PLC-2 CONTROL PANEL ANALOG OUTPUTS MODIFICATIONS
I-302 PLC-3 CONTROL PANEL LAYOUT (EXTERIOR) MODIFICATIONS
I-305 PLC-3 CONTROL PANEL POWER DISTRIBUTION MODIFICATIONS
I-306 PLC-3 CONTROL PANEL POWER COMMUNICATIONS MODIFICATIONS
I-307 PLC-3 CONTROL PANEL DIGITAL INPUTS MODIFICATIONS
I-308 PLC-3 CONTROL PANEL DIGITAL INPUTS MODIFICATIONS
I-310 PLC-3 CONTROL PANEL ANALOG INPUTS MODIFICATIONS
I-313 PLC-3 CONTROL PANEL MOTOR CIRCUIT WIRING MODIFICATIONS
I-401 PLC-4 CONTROL PANEL POWER BILL OF MATERIAL MODIFICATIONS
I-402 PLC-4 CONTROL PANEL LAYOUT MODIFICATIONS
I-405 PLC-4 CONTROL PANEL POWER DISTRIBUTION MODIFICATIONS
I-410 PLC-4 CONTROL PANEL DIGITAL INPUTS MODIFICATIONS
I-412 PLC-4 CONTROL PANEL RELAY OUTPUTS MODIFICATIONS
I-413 PLC-4 CONTROL PANEL ANALOG INPUTS MODIFICATIONS
I-414 PLC-4 CONTROL PANEL ANALOG INPUTS & OUTPUTS MODIFICATIONS
I-416 PLC-4 CONTROL PANEL ANALOG OUTPUTS MODIFICATIONS
I-501 PLC-5 CONTROL PANEL BILL OF MATERIAL MODIFICATIONS
I-502 PLC-5 CONTROL PANEL EQUIPMENT LAYOUT MODIFICATIONS
I-504 PLC-5 CONTROL PANEL POWER DISTRIBUTION MODIFICATIONS
I-505 PLC-5 CONTROL PANEL COMMUNICATIONS MODIFICATIONS
I-601 STACKPOLE STREET BOOSTER STATION PLC-20 CONTROL PANEL LEGEND & NOTES
I-602 STACKPOLE STREET BOOSTER STATION PLC-20 CONTROL PANEL EQUIPMENT LAYOUT
I-603 STACKPOLE STREET BOOSTER STATION PLC-20 CONTROL PANEL TERMINAL BLOCK LAYOUT
I-604 STACKPOLE STREET BOOSTER STATION PLC-20 CONTROL PANEL POWER DISTRIBUTION
I-605 STACKPOLE STREET BOOSTER STATION PLC-20 CONTROL PANEL COMMUNICATIONS
I-606 STACKPOLE STREET BOOSTER STATION PLC-20 CONTROL PANEL PLC BASE I/O DIGITAL INPUTS & RELAY OUTPUTS
I-607 STACKPOLE STREET BOOSTER STATION PLC-20 CONTROL PANEL PLC BASE I/O ANALOG INPUTS & OUTPUTS
I-608 STACKPOLE STREET BOOSTER STATION PLC-20 CONTROL PANEL PLC EXPANSION I/O DIGITAL & ANALOG INPUTS
I-609 STACKPOLE STREET BOOSTER STATION PLC-20 CONTROL PANEL PLC EXPANSION I/O ANALOG OUTPUTS
I-701 PLC-16 CONTROL PANEL ANALOG INPUTS MODIFICATIONS
I-801 TYPICAL SAMPLE PUMP CONTROL PANEL EQUIPMENT LAYOUT & WIRING DETAILS

ISSUE FOR BID

WOODARD & CURRAN
960 Washington Street, Suite 325N
Dedham, Massachusetts 02026
800.446.5518 | www.woodardcurran.com
COMMITMENT & INTEGRITY DRIVE RESULTS

THIS DOCUMENT IS THE PROPERTY OF WOODARD & CURRAN INC. AND ITS CLIENT. REPRODUCTION OR MODIFICATION WITHOUT WRITTEN PERMISSION IS PROHIBITED.

REV	DESCRIPTION	DATE
B	ISSUE FOR BID	03/11/15
A	FOR MASSDEP REVIEW	07/18/14

DESIGNED BY: DC
DRAWN BY: RPM
CHECKED BY: DC
224802-I001.dwg

CONTROL SYSTEM MODIFICATIONS
SHEET INDEX

LOWELL REGIONAL WATER UTILITY
LOWELL, MASSACHUSETTS

WATER SYSTEM IMPROVEMENTS

JOB NO.: 224802.20
DATE: MARCH 2015
SCALE: NONE
SHEET: 2 OF 47

I-001

\\wc\shared\Projects\224802 Lowell MA - Water System Improvement PEF 2011\wip\Drawings\Controls\224802-I001.dwg, Mar 03, 2015 - 1:52pm

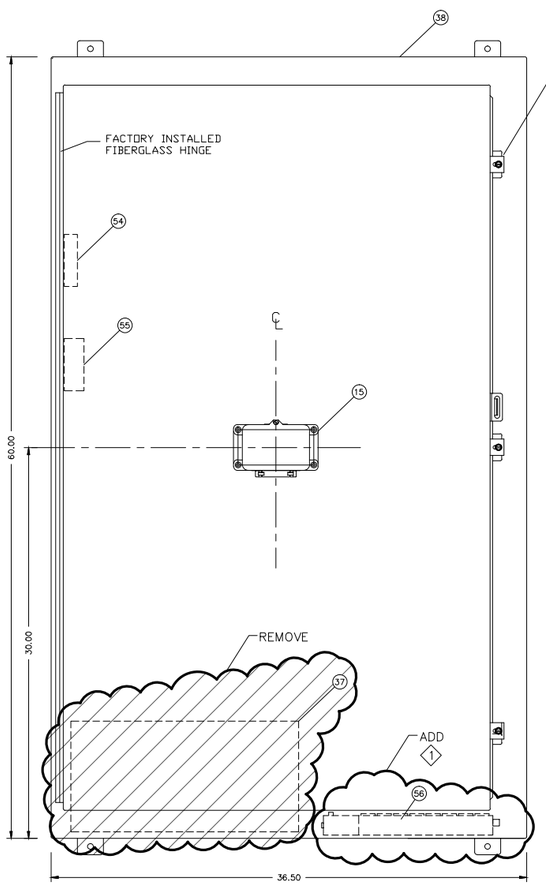

ENCLOSURE FRONT VIEW

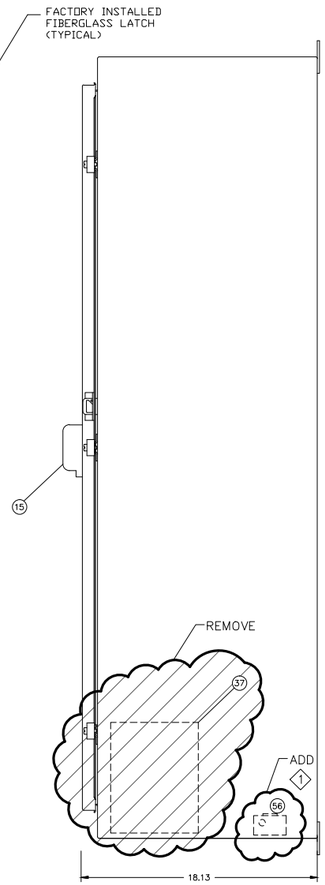

ENCLOSURE RIGHT SIDE VIEW

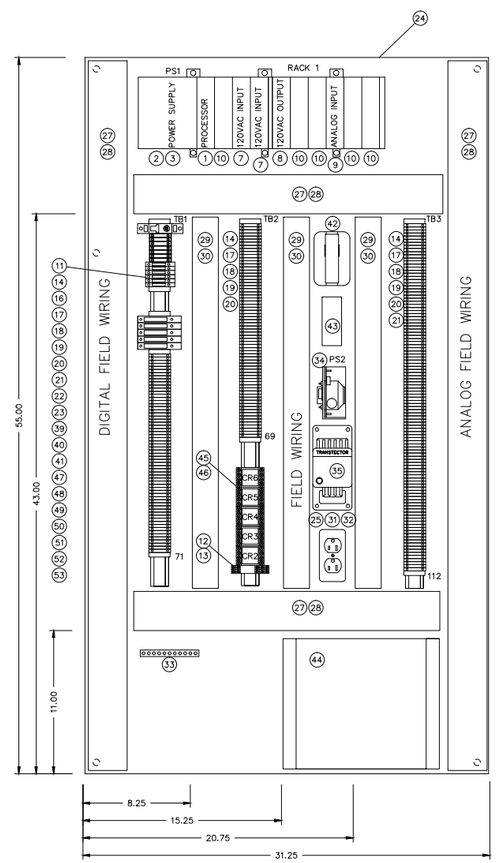

SUB PANEL

BILL OF MATERIAL

ITEM	QTY	MANUFACTURER	PART NUMBER	DESCRIPTION	DESIGNATION
1	1	ALLEN BRADLEY	1747-L551	SLC 5/05 PROCESSOR	RACK 1 SLOT 0
2	1	ALLEN BRADLEY	1746-A10	10 SLOT I/O RACK	RACK 1
3	1	ALLEN BRADLEY	1746-P4	I/O RACK POWER SUPPLY	PS1
4					
5					
6					
7	2	ALLEN BRADLEY	1746-IA16	120 VAC DIGITAL INPUT MODULE, 16PT.	RACK 1, SLOTS 2 & 3
8	1	ALLEN BRADLEY	1746-OA16	120 VAC DIGITAL OUTPUT MODULE, 16PT.	RACK 1, SLOT 4
9	1	ALLEN BRADLEY	1746-NI8	ANALOG INPUT MODULE, 8PT.	RACK 1, SLOT 7
10	5	ALLEN BRADLEY	1746-N2	EMPTY SLOT FILLER	RACK 1, SLOTS 1, 5, 6, 8, 9
11	1	ALLEN BRADLEY	1492-CB1G300	CIRCUIT BREAKER, 30 AMP, 1 POLE	CB1
12	1	ALLEN BRADLEY	700-HK32A1	RELAY, 2 POLE, 5 AMP, 120VAC	CR1
13	1	ALLEN BRADLEY	700-HN122	RELAY SOCKET	CR1
14	3	ALLEN BRADLEY	1492-DR6	RAISED DIN RAIL	TB1, TB2, TB3
15	1	GRACE ENGINEERING	P-R2-F2RO	ETHERNET INTERFACE W/ 120VAC OUTLET, NEMA 4X	ETHERNET INTERFACE
16	2	BUSS	GMA-2A	FUSE, 2 AMP, 250V	FU4, FU5
17	252	ENTRELEC	115116.07	TERMINAL BLOCK	TB1, TB2, TB3
18	4	ENTRELEC	118368.16	TERMINAL BLOCK END BARRIER	TB1, TB2, TB3
19	8	ENTRELEC	103002.26	TERMINAL BLOCK END ANCHOR	TB1, TB2, TB3
20	3	ENTRELEC	233000.01	BLANK TERMINAL MARKERS, 100CT.	TB1, TB2, TB3
21	3	ENTRELEC	168973.07	TERMINAL JUMPER BAR, 10 POLE	TB1, TB2, TB3
22	4	ENTRELEC	115657.25	FUSE BLOCK	FU1 thru FU6
23	1	ENTRELEC	118624.27	FUSE BLOCK END BARRIER	FU6
24	1	STAHLIN	BP-5036	ALUMINUM SUB PANEL, (31" x 55")	
25	1	HUBBELL	CR15	DUPLEX RECEPTACLE, 15 AMP	UPS POWER RECEPTACLE
26	1	HUBBELL	5266C	PLUG, 15 AMP, 2 POLE, 3 WIRE	
27	18 FT	PANDUIT	E3X4LG6	3" x 4" WIREDUCT	
28	18 FT	PANDUIT	C3LG6	3" WIREDUCT COVER	
29	12 FT	PANDUIT	E2X4LG6	2" x 4" WIREDUCT	
30	12 FT	PANDUIT	C2LG6	2" WIREDUCT COVER	
31	1	RACO	660	HANDY BOX	UPS POWER RECEPTACLE
32	1	RACO	864	HANDY BOX COVER	UPS POWER RECEPTACLE
33	1	SQUARE-D	PK12GTA	GROUND BAR	
34	1	SOLA	SLS-24-012	POWER SUPPLY, 24 VDC, 1.2 AMP	PS2
35	1	TRANSTECTOR	ACP100BW3R	120 VAC SURGE SUPPRESSOR WITH RELAY	
36	8 FT			#14,3 TYPE SJO CABLE	
37	1	APC	BP1000	UNINTERRUPTIBLE POWER SYSTEM, 1000 VA	UPS
38	1	STAHLIN	N603616HWT	ENCLOSURE, NEMA 4X FIBERGLASS	
39	1	BUSS	GMA-3A	FUSE, 3 AMP, 250V	FU1
40	2	BUSS	GMA-4A	FUSE, 4 AMP, 250V	FU6
41	1	BUSS	GMA-1A	FUSE, 1 AMP, 250V	FU3
42	1	3COM	3C19260	5 PORT ETHERNET HUB	HUB
43	1	BLACK BOX	SP512A-R3	100 BASE-T ETHERNET SURGE PROTECTOR	
44	1	TELEDESIGN	TS-4000	LICENSED RADIO MODEM	
45	5	ALLEN BRADLEY	700-HA33A1	RELAY, 3 POLE, 10 AMP, 120VAC	CR2 thru CR6
46	5	ALLEN BRADLEY	700-HN125	RELAY SOCKET	CR2 thru CR6
47	5	ENTRELEC	199095.13	FUSE BLOCK	FU7 thru FU11
48	1	ENTRELEC	173510.20	FUSE BLOCK JUMPER BAR, 10 POLE	FU7 thru FU11
49	1	ENTRELEC	199635.24	FUSE BLOCK END BARRIER	FU11
50	7	ENTRELEC	115118.11	TERMINAL BLOCK, 8MM	TB1
51	1	ENTRELEC	234000.02	BLANK TERMINAL MARKERS, 100CT., 8MM	TB1
52	1	ENTRELEC	168974.00	TERMINAL JUMPER BAR, 10 POLE, 8MM	TB1
53	5	BUSS	AGC-10	FUSE, 10 AMP, 250V	FU7 thru FU11
54	1			10 BASE-T ETHERNET TO FIBER CONVERTER	SUPPLIED BY OTHERS
55	1			FIBER PUNCH DOWN BLOCK	SUPPLIED BY OTHERS
56	1	TRIPP-LITE	SK6-6	8-OUTLET SURGE PROTECTED POWER STRIP	

GENERAL NOTES:
1. REMOVE ITEM 37 FROM PANEL AND DISPOSE OF PROPERLY.

KEYED NOTES:
1. FURNISH AND INSTALL ITEM 56 IN PANEL (WIRING DETAIL ON DRAWING I-104).

ISSUE FOR BID

WOODARD & CURRAN
960 Washington Street, Suite 325N
Dedham, Massachusetts 02026
800.446.5518 | www.woodardcurran.com
COMMITMENT & INTEGRITY DRIVE RESULTS

THIS DOCUMENT IS THE PROPERTY OF WOODARD & CURRAN INC. AND ITS CLIENT. REPRODUCTION OR MODIFICATION WITHOUT WRITTEN PERMISSION IS PROHIBITED.

REV	DESCRIPTION	DATE
B	ISSUE FOR BID	03/11/15
A	FOR MASSDEP REVIEW	07/18/14

DESIGNED BY: DC | CHECKED BY: BCC
DRAWN BY: RPM | 224802-I-102.dwg

PLC-1 CONTROL PANEL LAYOUT MODIFICATIONS

LOWELL REGIONAL WATER UTILITY
LOWELL, MASSACHUSETTS

WATER SYSTEM IMPROVEMENTS

JOB NO.: 224802.20
DATE: MARCH 2015
SCALE: NTS
SHEET: 3 OF 47

I-102

\\we\shared\Projects\224802 Lowell MA - Water System Improvement PEF 2011\wip\Drawings\Controls\224802-I-102.dwg, Mar 03, 2015 - 1:52pm

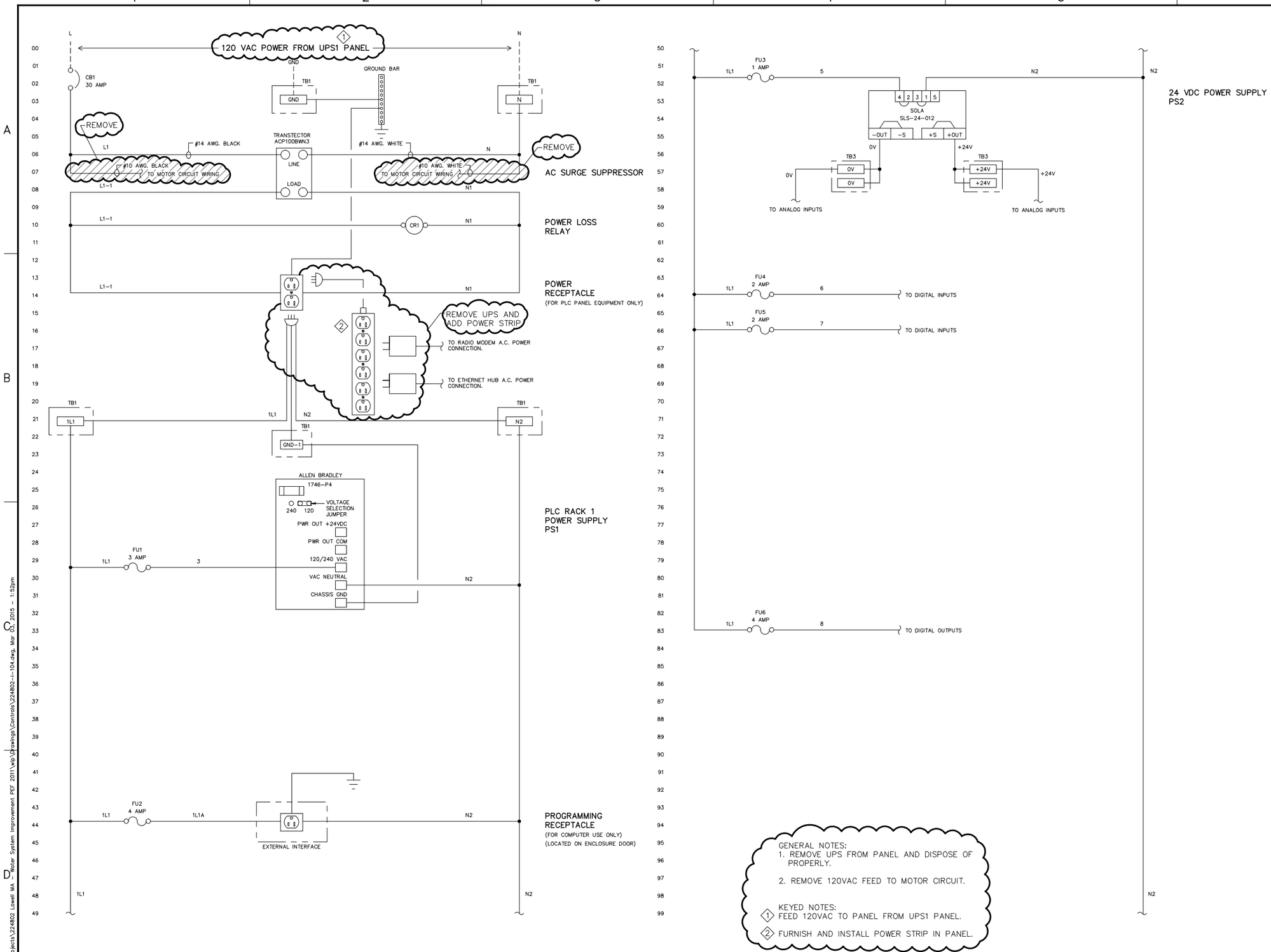

GENERAL NOTES:
1. REMOVE UPS FROM PANEL AND DISPOSE OF PROPERLY.
2. REMOVE 120VAC FEED TO MOTOR CIRCUIT.

KEYED NOTES:
1. FEED 120VAC TO PANEL FROM UPS1 PANEL.
2. FURNISH AND INSTALL POWER STRIP IN PANEL.

ISSUE FOR BID

WOODARD & CURRAN
960 Washington Street, Suite 325N
Dedham, Massachusetts 02026
800.446.5518 | www.woodardcurran.com
COMMITMENT & INTEGRITY DRIVE RESULTS

THIS DOCUMENT IS THE PROPERTY OF WOODARD & CURRAN INC. AND ITS CLIENT. REPRODUCTION OR MODIFICATION WITHOUT WRITTEN PERMISSION IS PROHIBITED.

REV	DESCRIPTION	DATE
B	ISSUE FOR BID	03/11/15
A	FOR MASSDEP REVIEW	07/18/14

DESIGNED BY: DC CHECKED BY: BCC
DRAWN BY: RPM 224802-I-104.dwg

PLC-1 CONTROL PANEL POWER DISTRIBUTION MODIFICATIONS

LOWELL REGIONAL WATER UTILITY
LOWELL, MASSACHUSETTS

WATER SYSTEM IMPROVEMENTS

JOB NO.: 224802.20
DATE: MARCH 2015
SCALE: NTS
SHEET: 4 OF 47

I-104

\\wc\shared\Projects\224802 Lowell MA - Water System Improvement PEF 2011\wip\Drawings\Controls\224802-I-104.dwg, Mar 03, 2015 - 1:52pm

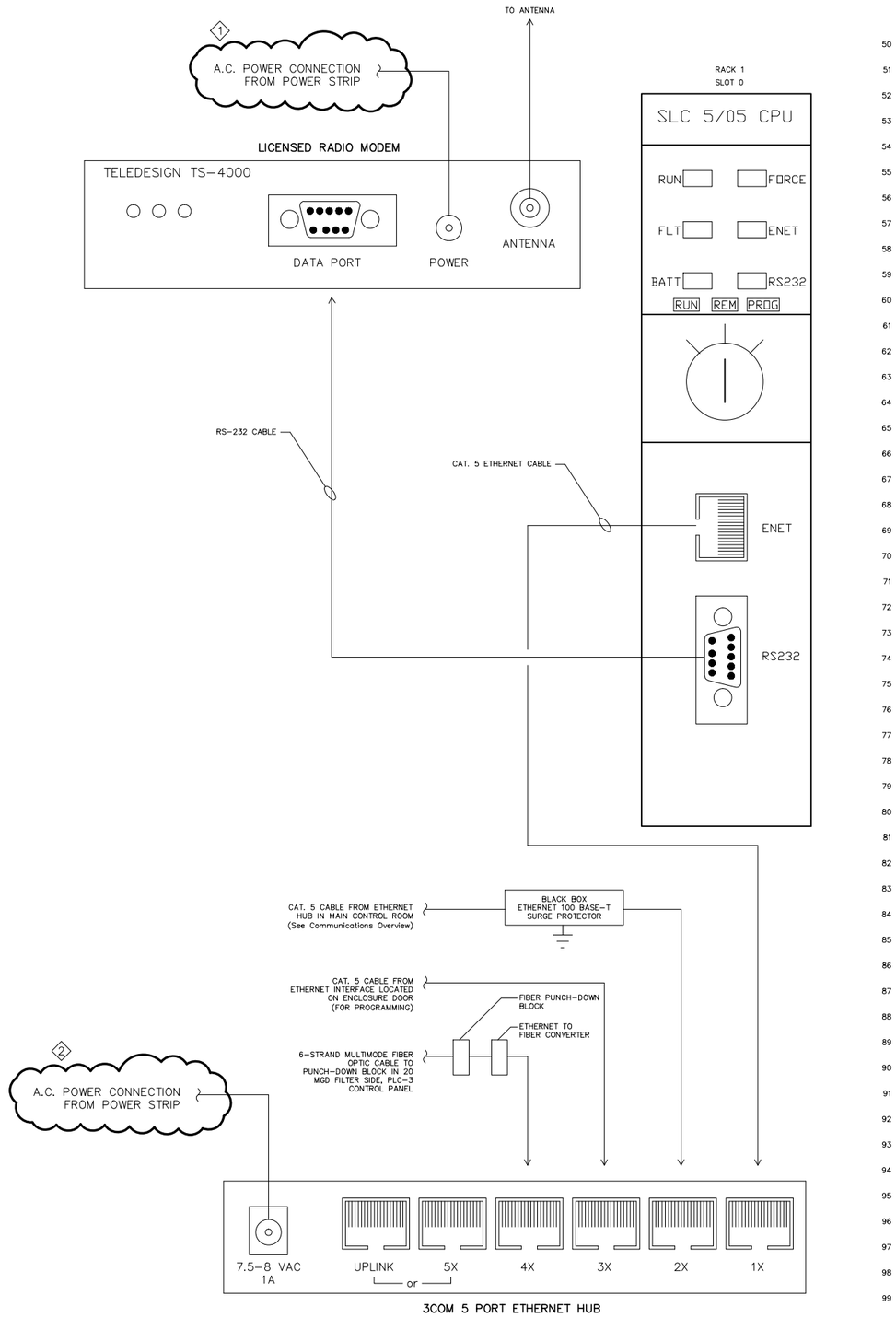

RACK 1
SLOT 1
SPARE SLOT

KEYED NOTES:
1. FEED POWER TO RADIO MODEM FROM POWER STRIP.
2. FEED POWER TO ETHERNET HUB FROM POWER STRIP.

ISSUE FOR BID

WOODARD & CURRAN
960 Washington Street, Suite 325N
Dedham, Massachusetts 02026
800.446.5518 | www.woodardcurran.com
COMMITMENT & INTEGRITY DRIVE RESULTS

THIS DOCUMENT IS THE PROPERTY OF WOODARD & CURRAN INC. AND ITS CLIENT. REPRODUCTION OR MODIFICATION WITHOUT WRITTEN PERMISSION IS PROHIBITED.

REV	DESCRIPTION	DATE
B	ISSUE FOR BID	03/11/15
A	FOR MASSDEP REVIEW	07/18/14

DESIGNED BY: DC
DRAWN BY: RPM
CHECKED BY: BCC
224802-I-105.dwg

PLC-1 CONTROL PANEL COMMUNICATIONS MODIFICATIONS

LOWELL REGIONAL WATER UTILITY
LOWELL, MASSACHUSETTS

WATER SYSTEM IMPROVEMENTS

JOB NO.: 224802.20
DATE: MARCH 2015
SCALE: NTS
SHEET: 5 OF 47

I-105

\\we\shared\Projects\224802 Lowell MA - Water System Improvement PEF 2011\wip\Drawings\Controls\224802-I-105.dwg, Mar 02, 2015 - 11:52pm

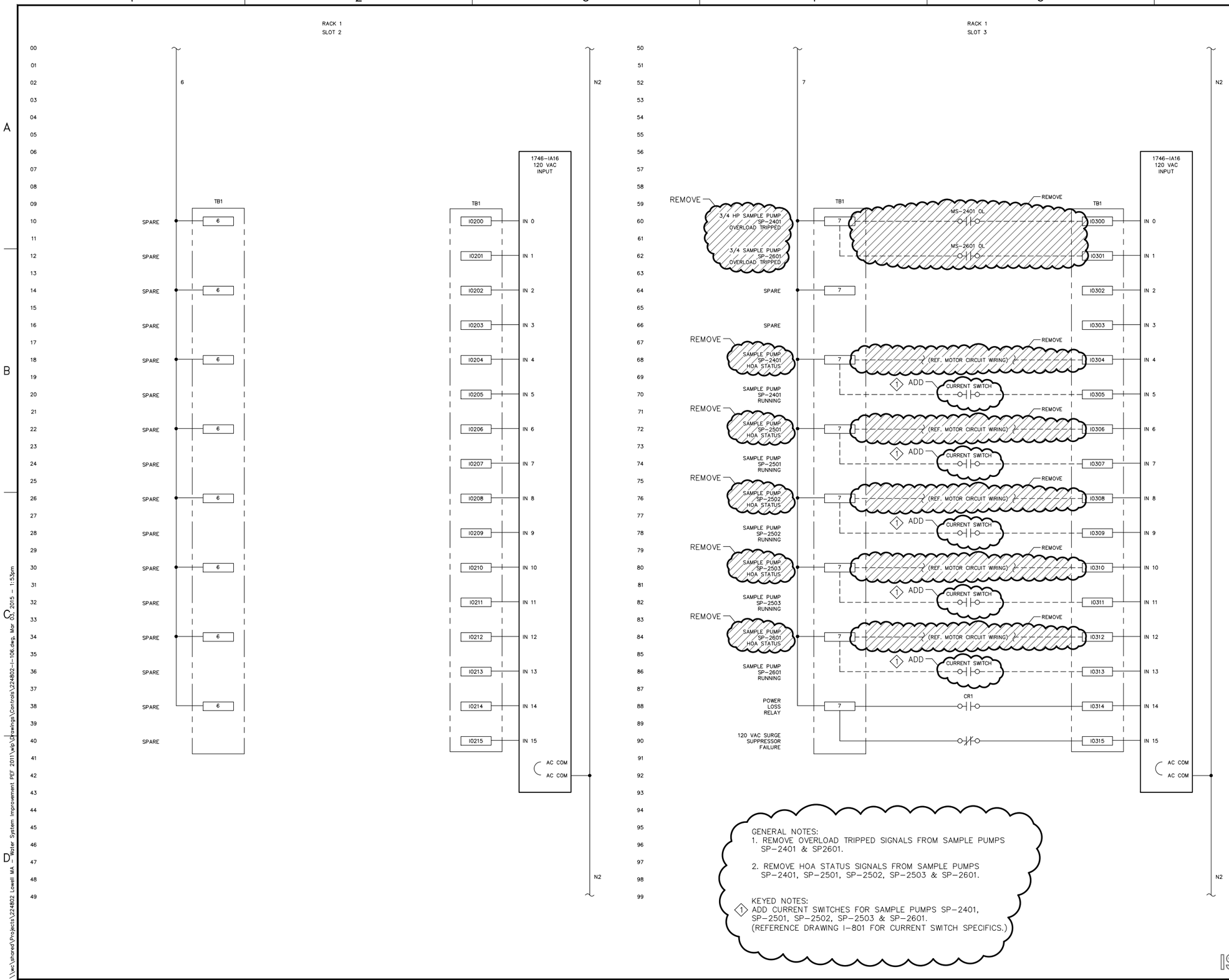

GENERAL NOTES:
1. REMOVE OVERLOAD TRIPPED SIGNALS FROM SAMPLE PUMPS SP-2401 & SP2601.
2. REMOVE HOA STATUS SIGNALS FROM SAMPLE PUMPS SP-2401, SP-2501, SP-2502, SP-2503 & SP-2601.

KEYED NOTES:
1. ADD CURRENT SWITCHES FOR SAMPLE PUMPS SP-2401, SP-2501, SP-2502, SP-2503 & SP-2601. (REFERENCE DRAWING I-801 FOR CURRENT SWITCH SPECIFICS.)

ISSUE FOR BID

WOODARD & CURRAN
960 Washington Street, Suite 325N
Dedham, Massachusetts 02026
800.446.5518 | www.woodardcurran.com
COMMITMENT & INTEGRITY DRIVE RESULTS

THIS DOCUMENT IS THE PROPERTY OF WOODARD & CURRAN INC. AND ITS CLIENT. REPRODUCTION OR MODIFICATION WITHOUT WRITTEN PERMISSION IS PROHIBITED.

REV	DESCRIPTION	DATE
B	ISSUE FOR BID	03/11/15
A	FOR MASSDEP REVIEW	07/18/14

DESIGNED BY: DC | CHECKED BY: BCC
DRAWN BY: RPM | 224802-I-106.dwg

PLC-1 CONTROL PANEL DIGITAL INPUTS MODIFICATIONS

LOWELL REGIONAL WATER UTILITY
LOWELL, MASSACHUSETTS

WATER SYSTEM IMPROVEMENTS

JOB NO.: 224802.20
DATE: MARCH 2015
SCALE: NTS
SHEET: 6 OF 47

I-106

\\wc\shared\Projects\224802 Lowell MA - Water System Improvement PEF 2011\wip\Drawings\Controls\224802-I-106.dwg, Mar 03, 2015 - 1:53pm

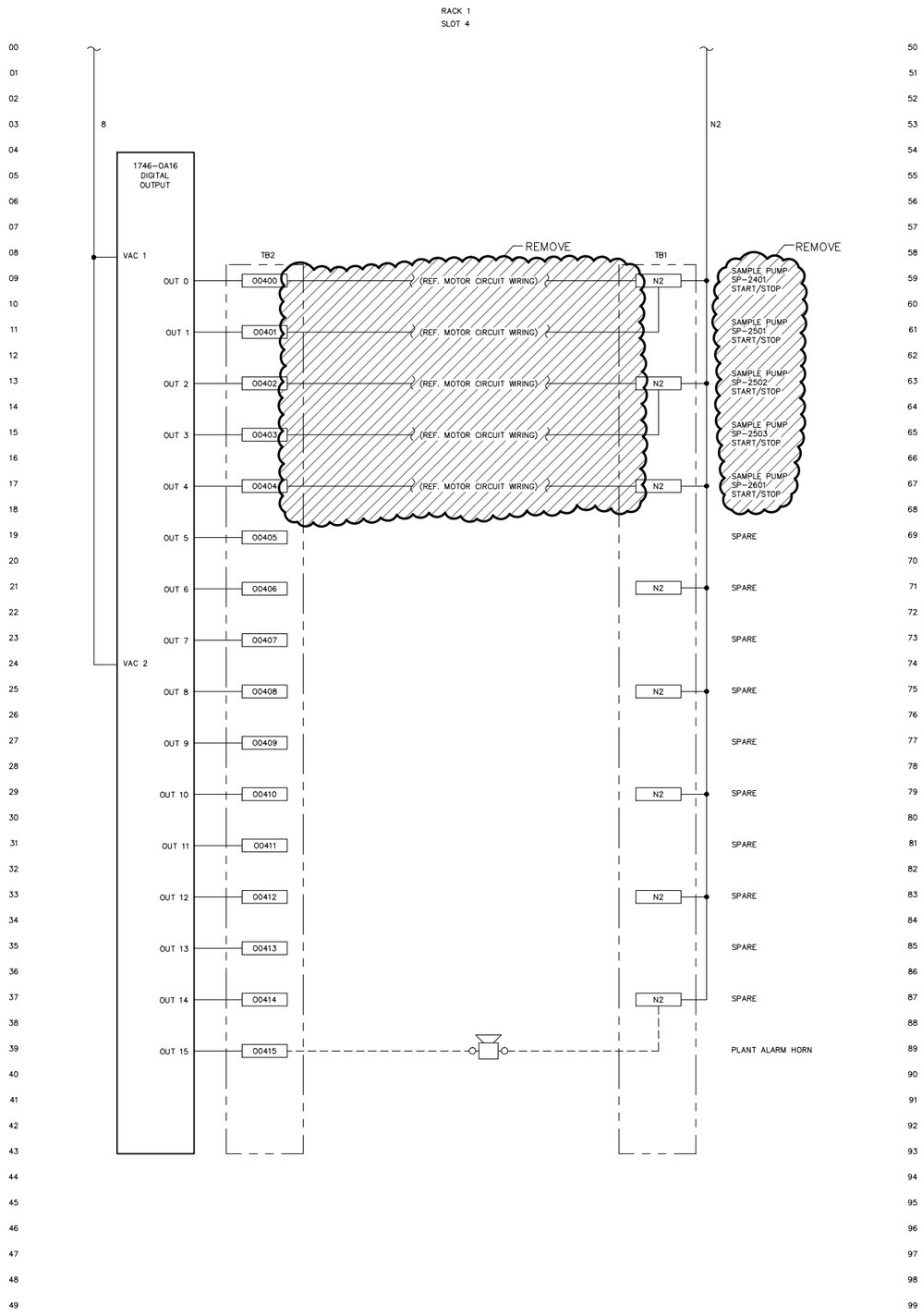

RACK 1
SLOT 5
SPARE SLOT

GENERAL NOTES:
1. REMOVE START/STOP SIGNALS TO SAMPLE PUMPS SP-2401, SP-2501, SP-2502, SP-2503 & SP2601.

ISSUE FOR BID

WOODARD & CURRAN
960 Washington Street, Suite 325N
Dedham, Massachusetts 02026
800.446.5518 | www.woodardcurran.com
COMMITMENT & INTEGRITY DRIVE RESULTS

THIS DOCUMENT IS THE PROPERTY OF WOODARD & CURRAN INC. AND ITS CLIENT. REPRODUCTION OR MODIFICATION WITHOUT WRITTEN PERMISSION IS PROHIBITED.

REV	DESCRIPTION	DATE
B	ISSUE FOR BID	03/11/15
A	FOR MASSDEP REVIEW	07/18/14

DESIGNED BY: DC CHECKED BY: BCC
DRAWN BY: RPM 224802-I-107.dwg

PLC-1 CONTROL PANEL DIGITAL OUTPUTS MODIFICATIONS

LOWELL REGIONAL WATER UTILITY
LOWELL, MASSACHUSETTS

WATER SYSTEM IMPROVEMENTS

JOB NO.: 224802.20
DATE: MARCH 2015
SCALE: NTS
SHEET: 7 OF 47

I-107

\\we\shared\Projects\224802 Lowell MA - Water System Improvement PEF 2011\wip\Drawings\Controls\224802-I-107.dwg, Mar 02, 2015 - 11:53pm

RACK 1
SLOT 6
SPARE SLOT

RACK 1
SLOT 7

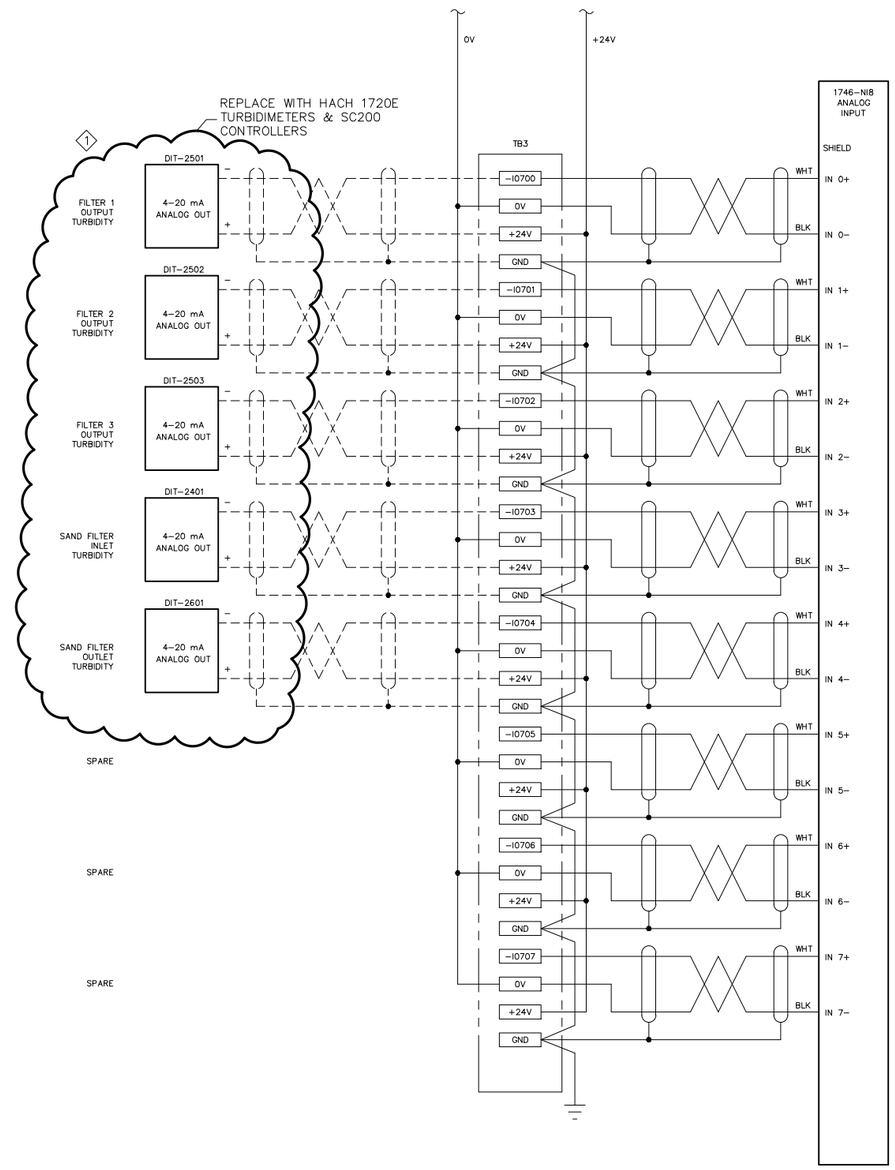

KEYED NOTES:
1. REPLACE DIT-2501, DIT-2502, DIT-2503, DIT-2401 & DIT-2601, WITH HACH 1720E TURBIDIMETERS & SC200 CONTROLLERS.

ISSUE FOR BID

WOODARD & CURRAN
980 Washington Street, Suite 325N
Dedham, Massachusetts 02026
800.446.5518 | www.woodardcurran.com
COMMITMENT & INTEGRITY DRIVE RESULTS

THIS DOCUMENT IS THE PROPERTY OF WOODARD & CURRAN INC. AND ITS CLIENT. REPRODUCTION OR MODIFICATION WITHOUT WRITTEN PERMISSION IS PROHIBITED.

REV	DESCRIPTION	DATE
B	ISSUE FOR BID	03/11/15
A	FOR MASSDEP REVIEW	07/18/14

DESIGNED BY: DC CHECKED BY: BCC
DRAWN BY: RPM 224802-I-108.dwg

PLC-1 CONTROL PANEL ANALOG INPUTS MODIFICATIONS

LOWELL REGIONAL WATER UTILITY
LOWELL, MASSACHUSETTS

WATER SYSTEM IMPROVEMENTS

JOB NO.: 224802.20
DATE: MARCH 2015
SCALE: NTS
SHEET: 8 OF 47

I-108

\\we\shared\Projects\224802 Lowell MA - Water System Improvement PEF 2011\wip\Drawings\Controls\224802-I-108.dwg, Mar 02, 2015 - 11:53pm

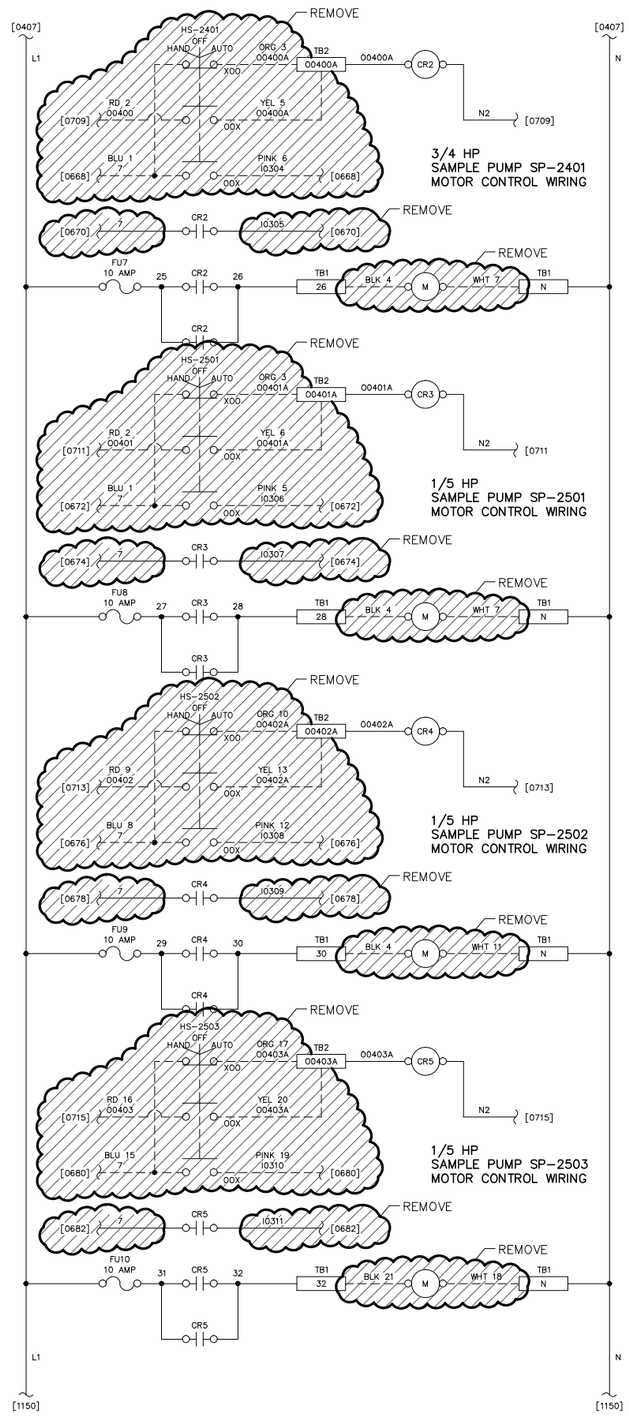

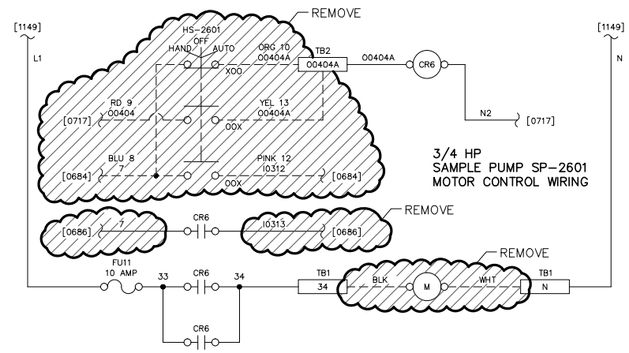

GENERAL NOTES:
1. REMOVE SELECTOR SWITCHES AND ASSOCIATED MOTOR CONTROL CIRCUIT WIRING FOR SAMPLE PUMPS SP-2401, SP-2501, SP-2502, SP-2503 & SP-2601.

ISSUE FOR BID

960 Washington Street, Suite 325N
Dedham, Massachusetts 02026
800.446.5518 | www.woodardcurran.com
WOODARD & CURRAN
COMMITMENT & INTEGRITY DRIVE RESULTS

THIS DOCUMENT IS THE PROPERTY OF WOODARD & CURRAN INC. AND ITS CLIENT. REPRODUCTION OR MODIFICATION WITHOUT WRITTEN PERMISSION IS PROHIBITED.

REV	DESCRIPTION	DATE
B	ISSUE FOR BID	03/11/15
A	FOR MASSDEP REVIEW	07/18/14

DESIGNED BY: DC CHECKED BY: BCC
DRAWN BY: RPM 224802-I-111.dwg

PLC-1 CONTROL PANEL MOTOR CIRCUIT WIRING MODIFICATIONS

LOWELL REGIONAL WATER UTILITY
LOWELL, MASSACHUSETTS

WATER SYSTEM IMPROVEMENTS

JOB NO.: 224802.20
DATE: MARCH 2015
SCALE: NTS
SHEET: 9 OF 47

I-111

\\wc\shared\Projects\224802 Lowell MA - Water System Improvement PEF 2011\wip\Drawings\Controls\224802-I-111.dwg, Mar 03, 2015 - 1:53pm

BILL OF MATERIAL

ITEM	QTY	MANUFACTURER	PART NUMBER	DESCRIPTION	DESIGNATION
1	1	APC	BP1000	UNINTERRUPTIBLE POWER SYSTEM, 1000 VA	UPS
2	1	STAHLIN	STASPNN727218HWT	ENCLOSURE, NEMA 4X FIBERGLASS	
3	1	HOFFMAN	A-LF16M48	FLUORESCENT CABINET LIGHT, 48"	CABINET LIGHTING
4	2	HOFFMAN	A-LFSWD	CABINET LIGHT DOOR SWITCH	DOOR SWTCH
5	1	GRACE ENGINEERING	P-R2-F2RO	ETHERNET INTERFACE W/ 120VAC OUTLET, NEMA 4X	ETHERNET INTERFACE
6	1	TRIPP-LITE	SK6-6	8-OUTLET SURGE PROTECTED POWER STRIP	

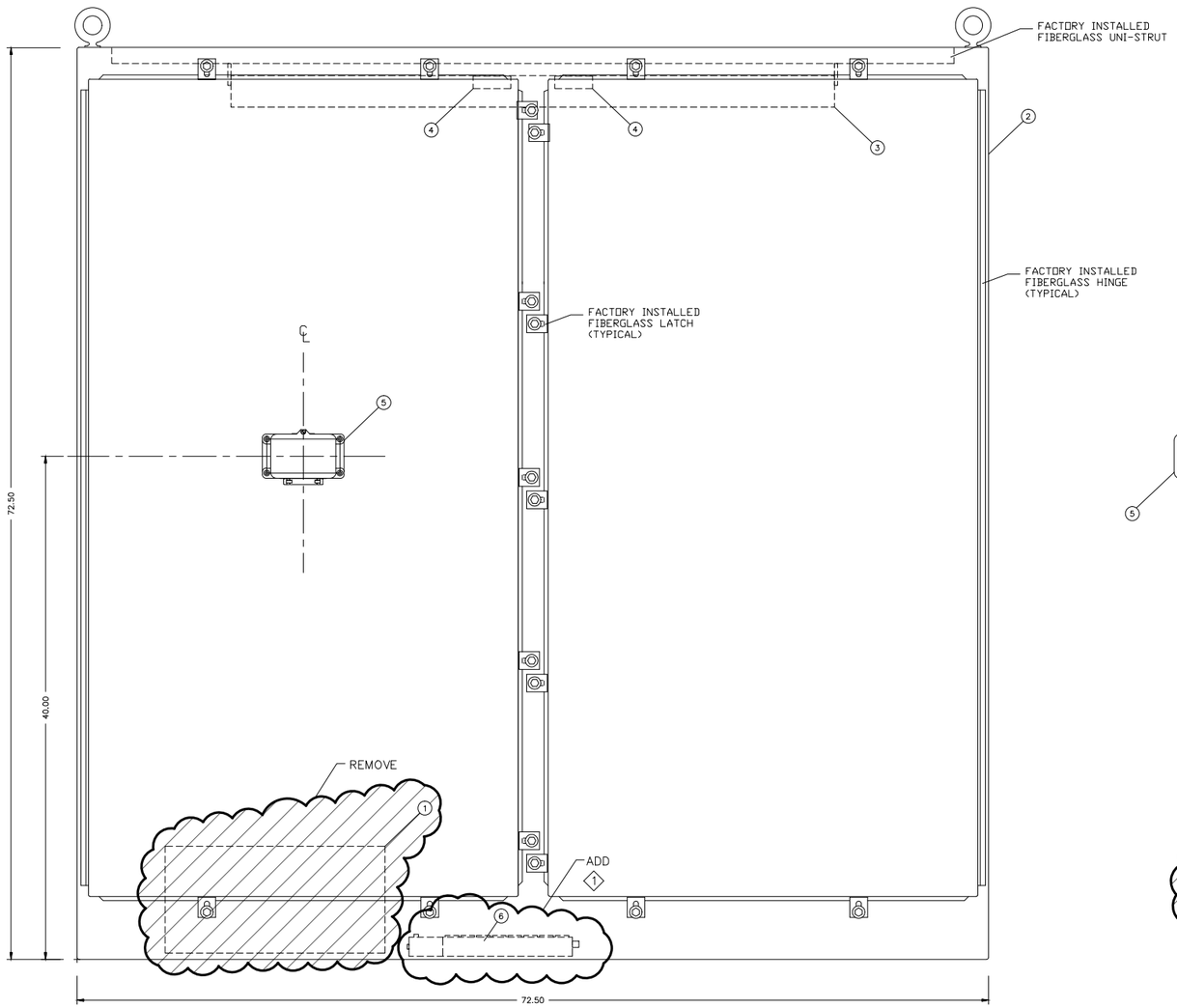

ENCLOSURE FRONT VIEW

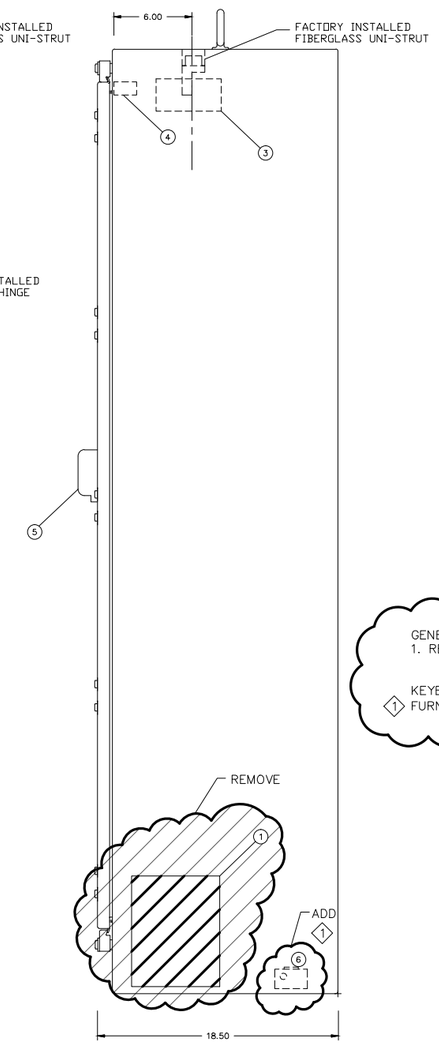

ENCLOSURE RIGHT SIDE VIEW

GENERAL NOTES:
1. REMOVE ITEM 1 FROM PANEL AND DISPOSE OF PROPERLY.

KEYED NOTES:
1. FURNISH AND INSTALL ITEM 6 IN PANEL (WIRING DETAIL ON DRAWING I-205).

ISSUE FOR BID

960 Washington Street, Suite 325N
Dedham, Massachusetts 02026
800.446.5518 | www.woodardcurran.com
WOODARD & CURRAN
COMMITMENT & INTEGRITY DRIVE RESULTS

THIS DOCUMENT IS THE PROPERTY OF WOODARD & CURRAN INC. AND ITS CLIENT. REPRODUCTION OR MODIFICATION WITHOUT WRITTEN PERMISSION IS PROHIBITED.

REV	DESCRIPTION	DATE
A	FOR MASSDEP REVIEW	07/18/14
B	ISSUE FOR BID	03/11/15

DESIGNED BY: DC
DRAWN BY: RPM
CHECKED BY: BCC
224802-I-202.dwg

PLC-2 CONTROL PANEL LAYOUT (EXTERIOR) MODIFICATIONS

LOWELL REGIONAL WATER UTILITY
LOWELL, MASSACHUSETTS

WATER SYSTEM IMPROVEMENTS

JOB NO.: 224802.20
DATE: MARCH 2015
SCALE: NTS
SHEET: 10 OF 47

I-202

\\wc\shared\Projects\224802 Lowell MA - Water System Improvement PEF 2011\wip\Drawings\Controls\224802-I-202.dwg, Mar 02, 2015 - 1:53pm

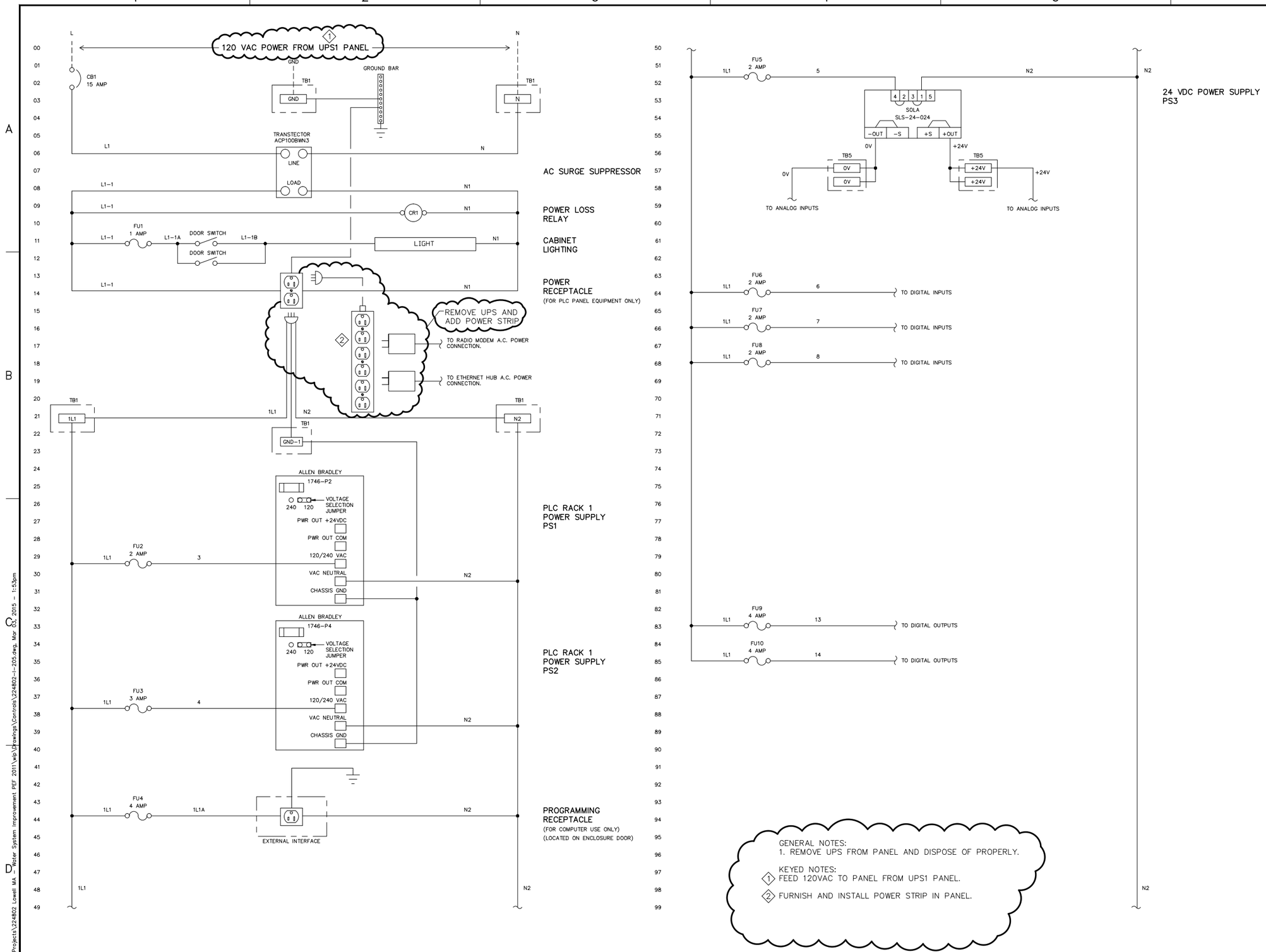

GENERAL NOTES:
1. REMOVE UPS FROM PANEL AND DISPOSE OF PROPERLY.

KEYED NOTES:
1. FEED 120VAC TO PANEL FROM UPS1 PANEL.
2. FURNISH AND INSTALL POWER STRIP IN PANEL.

ISSUE FOR BID

WOODARD & CURRAN
960 Washington Street, Suite 325N
Dedham, Massachusetts 02026
800.446.5518 | www.woodardcurran.com
COMMITMENT & INTEGRITY DRIVE RESULTS

THIS DOCUMENT IS THE PROPERTY OF WOODARD & CURRAN INC. AND ITS CLIENT. REPRODUCTION OR MODIFICATION WITHOUT WRITTEN PERMISSION IS PROHIBITED.

REV		DATE
B	ISSUE FOR BID	03/11/15
A	FOR MASSDEP REVIEW	07/18/14

DESIGNED BY: DC CHECKED BY: BCC
DRAWN BY: RPM 224802-I-205.dwg

PLC-2 CONTROL PANEL POWER DISTRIBUTION MODIFICATIONS

LOWELL REGIONAL WATER UTILITY
LOWELL, MASSACHUSETTS

WATER SYSTEM IMPROVEMENTS

JOB NO.: 224802.20
DATE: MARCH 2015
SCALE: NTS
SHEET: 11 OF 47

I-205

\\wc\shared\Projects\224802 Lowell MA - Water System Improvement PEF 2011\wip\Drawings\Controls\224802-I-205.dwg, Mar 02, 2015 - 1:53pm

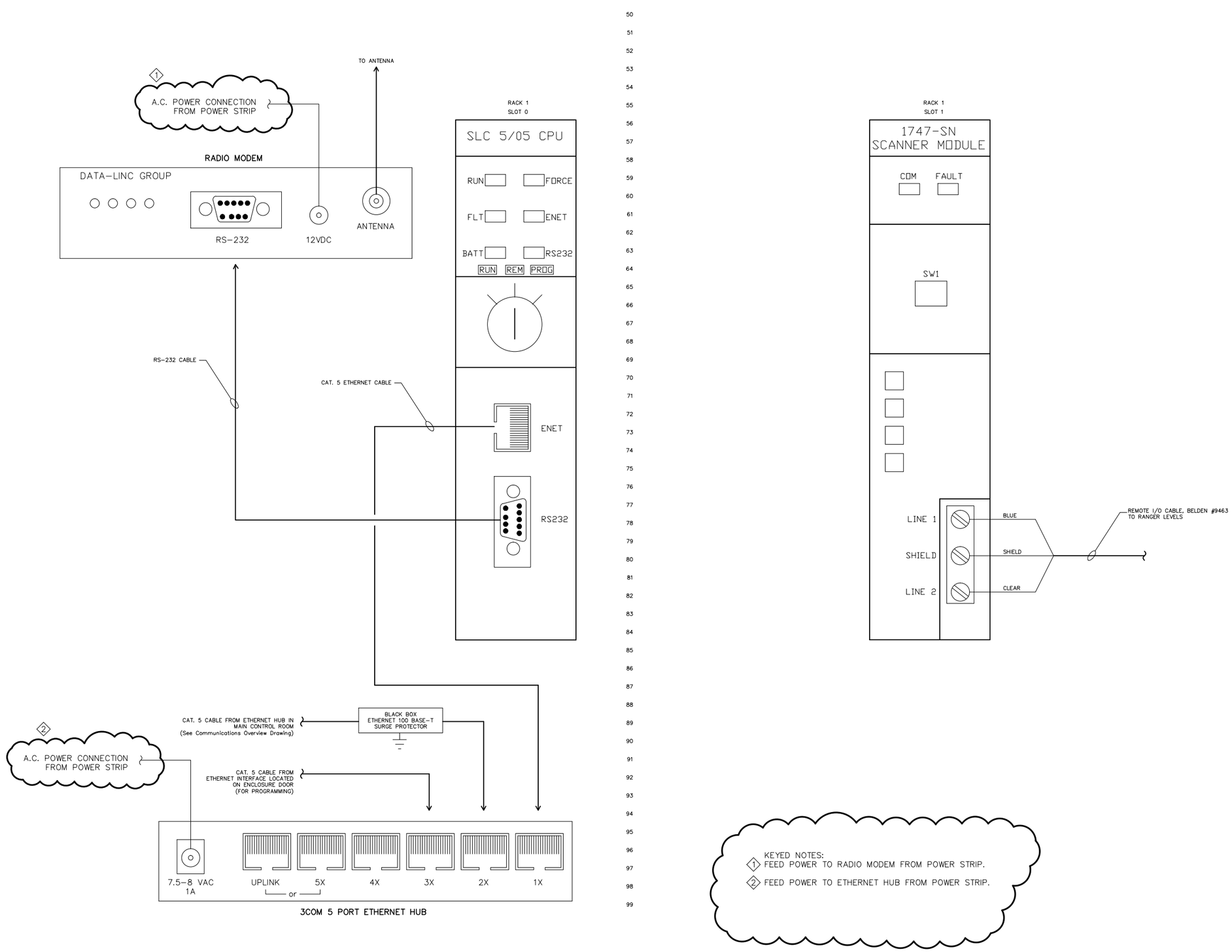

ISSUE FOR BID

WOODARD & CURRAN
980 Washington Street, Suite 325N
Dedham, Massachusetts 02026
800.446.5518 | www.woodardcurran.com
COMMITMENT & INTEGRITY DRIVE RESULTS

THIS DOCUMENT IS THE PROPERTY OF WOODARD & CURRAN INC. AND ITS CLIENT. REPRODUCTION OR MODIFICATION WITHOUT WRITTEN PERMISSION IS PROHIBITED.

REV	DESCRIPTION	DATE
B	ISSUE FOR BID	03/11/15
A	FOR MASSDEP REVIEW	07/18/14

DESIGNED BY: DC
DRAWN BY: RPM
CHECKED BY: BCC
224802-I-206.dwg

PLC-2 CONTROL PANEL COMMUNICATIONS MODIFICATIONS

LOWELL REGIONAL WATER UTILITY
LOWELL, MASSACHUSETTS

WATER SYSTEM IMPROVEMENTS

JOB NO.: 224802.20
DATE: MARCH 2015
SCALE: NTS
SHEET: 12 OF 47

I-206

\\we\shared\Projects\224802 Lowell MA - Water System Improvement PEF 2011\wip\Drawings\Controls\224802-I-206.dwg, Mar 02, 2015 - 1:53pm

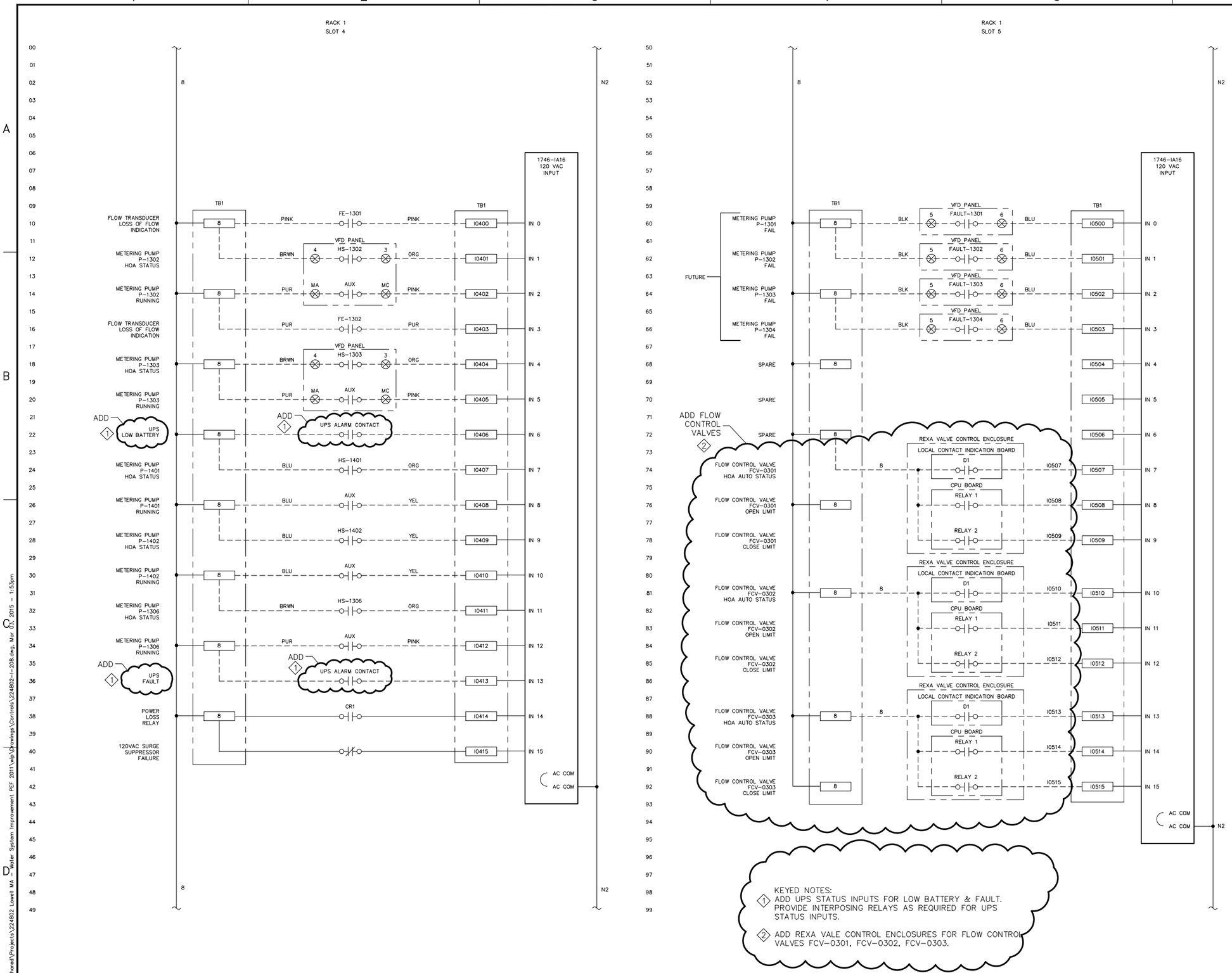

KEYED NOTES:

1. ADD UPS STATUS INPUTS FOR LOW BATTERY & FAULT. PROVIDE INTERPOSING RELAYS AS REQUIRED FOR UPS STATUS INPUTS.
2. ADD REXA VALE CONTROL ENCLOSURES FOR FLOW CONTROL VALVES FCV-0301, FCV-0302, FCV-0303.

ISSUE FOR BID

960 Washington Street, Suite 325N
Dedham, Massachusetts 02026
800.446.5518 | www.woodardcurran.com
COMMITMENT & INTEGRITY DRIVE RESULTS
WOODARD & CURRAN

THIS DOCUMENT IS THE PROPERTY OF WOODARD & CURRAN INC. AND ITS CLIENT. REPRODUCTION OR MODIFICATION WITHOUT WRITTEN PERMISSION IS PROHIBITED.

REV	DESCRIPTION	DATE
B	ISSUE FOR BID	03/11/15
A	FOR MASSDEP REVIEW	07/18/14

DESIGNED BY: DC
DRAWN BY: RPM
CHECKED BY: BCC
224802-I-208.dwg

PLC-2 CONTROL PANEL DIGITAL INPUTS MODIFICATIONS

LOWELL REGIONAL WATER UTILITY
LOWELL, MASSACHUSETTS

WATER SYSTEM IMPROVEMENTS

JOB NO.: 224802.20
DATE: MARCH 2015
SCALE: NTS
SHEET: 13 OF 47

I-208

\\we\shared\Projects\224802 Lowell MA Water System Improvement PEF 2011\wip\Drawings\Controls\224802-I-208.dwg, Mar 02, 2015 - 1:53pm

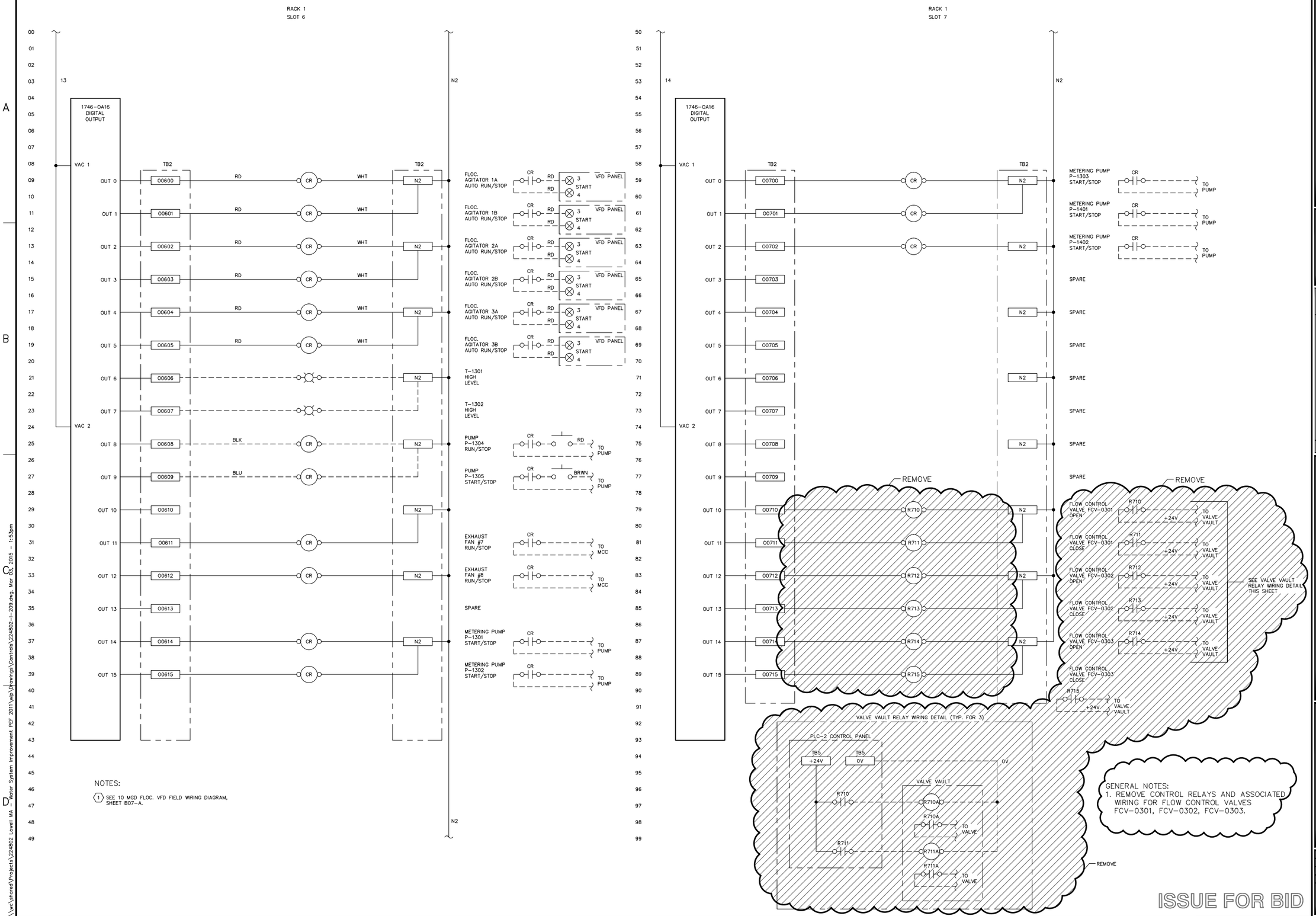

WOODARD & CURRAN
960 Washington Street, Suite 325N
Dedham, Massachusetts 02026
800.446.5518 | www.woodardcurran.com
COMMITMENT & INTEGRITY DRIVE RESULTS

THIS DOCUMENT IS THE PROPERTY OF WOODARD & CURRAN INC. AND ITS CLIENT. REPRODUCTION OR MODIFICATION WITHOUT WRITTEN PERMISSION IS PROHIBITED.

REV	DESCRIPTION	DATE
B	ISSUE FOR BID	03/11/15
A	FOR MASSDEP REVIEW	07/18/14

DESIGNED BY: DC CHECKED BY: BCC
DRAWN BY: RPM 224802-I-209.dwg

PLC-2 CONTROL PANEL DIGITAL OUTPUTS MODIFICATIONS

LOWELL REGIONAL WATER UTILITY
LOWELL, MASSACHUSETTS

WATER SYSTEM IMPROVEMENTS

JOB NO.: 224802.20
DATE: MARCH 2015
SCALE: NTS
SHEET: 14 OF 47

I-209

\\wc\shared\Projects\224802 Lowell MA Water System Improvement PEF 2011\wip\Drawings\Controls\224802-I-209.dwg, Mar 02 2015 - 1:53pm

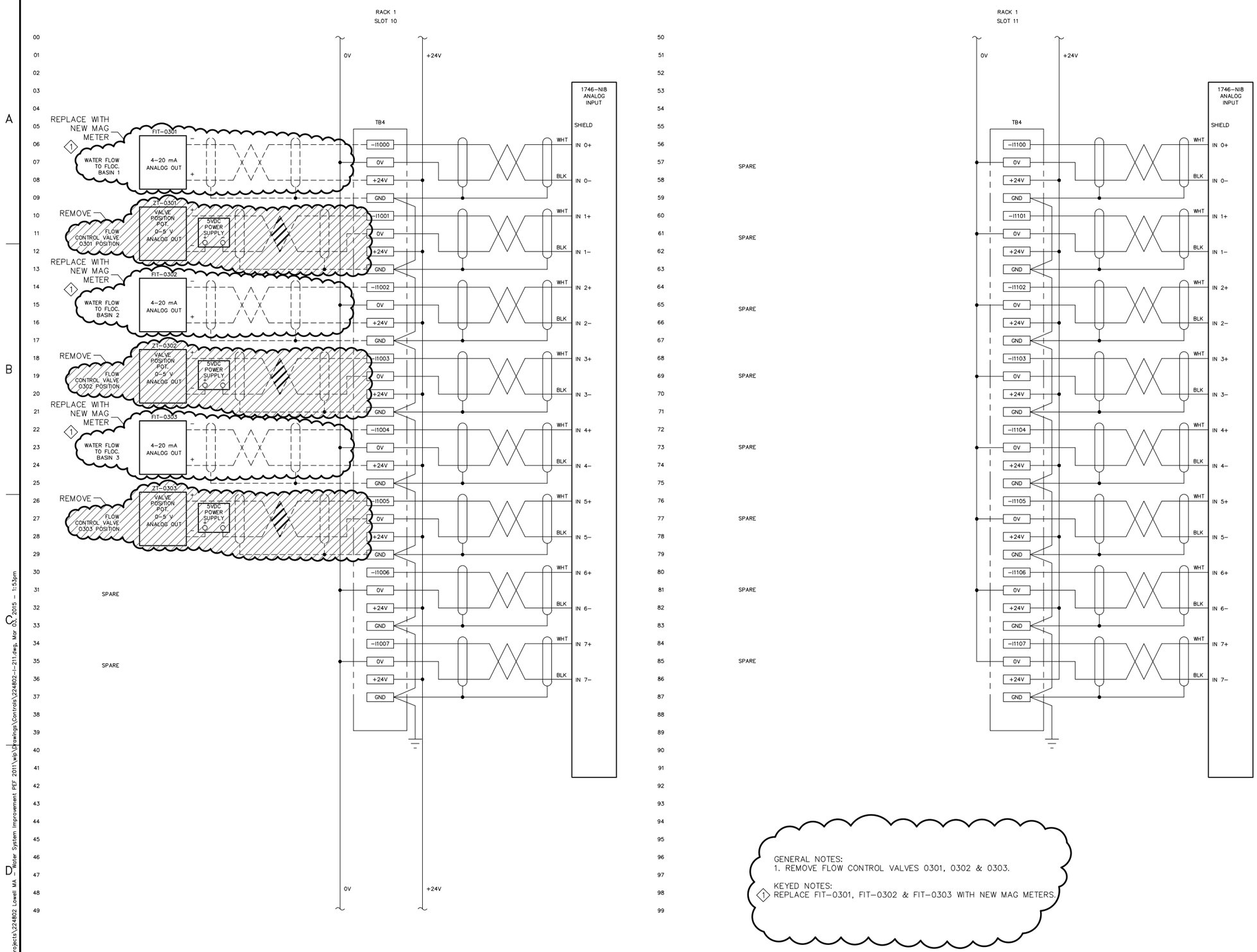

GENERAL NOTES:
1. REMOVE FLOW CONTROL VALVES 0301, 0302 & 0303.

KEYED NOTES:
1. REPLACE FIT–0301, FIT–0302 & FIT–0303 WITH NEW MAG METERS.

ISSUE FOR BID

960 Washington Street, Suite 325N
Dedham, Massachusetts 02026
800.446.5518 | www.woodardcurran.com
WOODARD & CURRAN
COMMITMENT & INTEGRITY DRIVE RESULTS

THIS DOCUMENT IS THE PROPERTY OF WOODARD & CURRAN INC. AND ITS CLIENT. REPRODUCTION OR MODIFICATION WITHOUT WRITTEN PERMISSION IS PROHIBITED.

REV	DESCRIPTION	DATE
B	ISSUE FOR BID	03/11/15
A	FOR MASSDEP REVIEW	07/18/14

DESIGNED BY: DC CHECKED BY: BCC
DRAWN BY: RPM 224802–I–211.dwg

PLC–2 CONTROL PANEL ANALOG INPUTS MODIFICATIONS

LOWELL REGIONAL WATER UTILITY
LOWELL, MASSACHUSETTS

WATER SYSTEM IMPROVEMENTS

JOB NO.: 224802.20
DATE: MARCH 2015
SCALE: NTS
SHEET: 15 OF 47

I-211

\\wc\shared\Projects\224802 Lowell MA - Water System Improvement PEF 2011\wip\Drawings\Controls\224802–I–211.dwg, Mar 03, 2015 – 1:53pm

RACK 1
SLOT 12
SPARE SLOT

RACK 1
SLOT 13

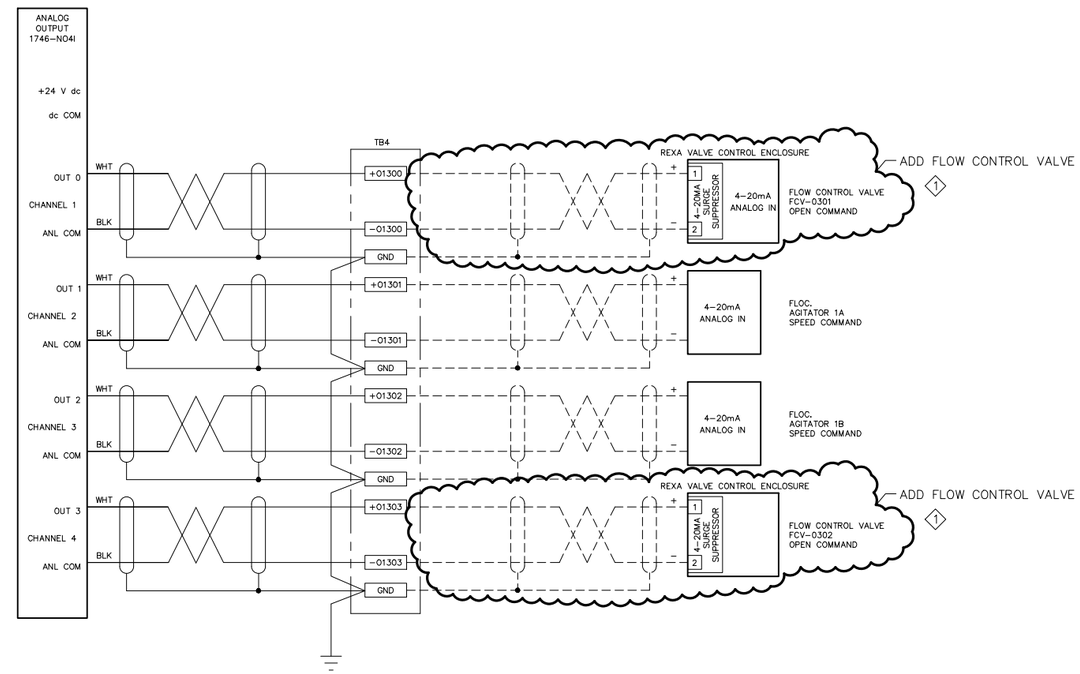

KEYED NOTES:
1. ADD REXA VALVE CONTROL ENCLOSURES FOR FLOW CONTROL VALVES FCV-0301 & FCV-0302.

ISSUE FOR BID

WOODARD & CURRAN
960 Washington Street, Suite 325N
Dedham, Massachusetts 02026
800.446.5518 | www.woodardcurran.com
COMMITMENT & INTEGRITY DRIVE RESULTS

THIS DOCUMENT IS THE PROPERTY OF WOODARD & CURRAN INC. AND ITS CLIENT. REPRODUCTION OR MODIFICATION WITHOUT WRITTEN PERMISSION IS PROHIBITED.

REV	DESCRIPTION	DATE
B	ISSUE FOR BID	03/11/15
A	FOR MASSDEP REVIEW	07/18/14

DESIGNED BY: DC
DRAWN BY: RPM
CHECKED BY: BCC
224802-I-212.dwg

PLC-2 CONTROL PANEL ANALOG OUTPUTS MODIFICATIONS

LOWELL REGIONAL WATER UTILITY
LOWELL, MASSACHUSETTS

WATER SYSTEM IMPROVEMENTS

JOB NO.: 224802.20
DATE: MARCH 2015
SCALE: NTS
SHEET: 16 OF 47

I-212

\\wc\shared\Projects\224802 Lowell MA - Water System Improvement PEF 2011\vsb\Drawings\Controls\224802-I-212.dwg, Mar 03, 2015 - 1:53pm

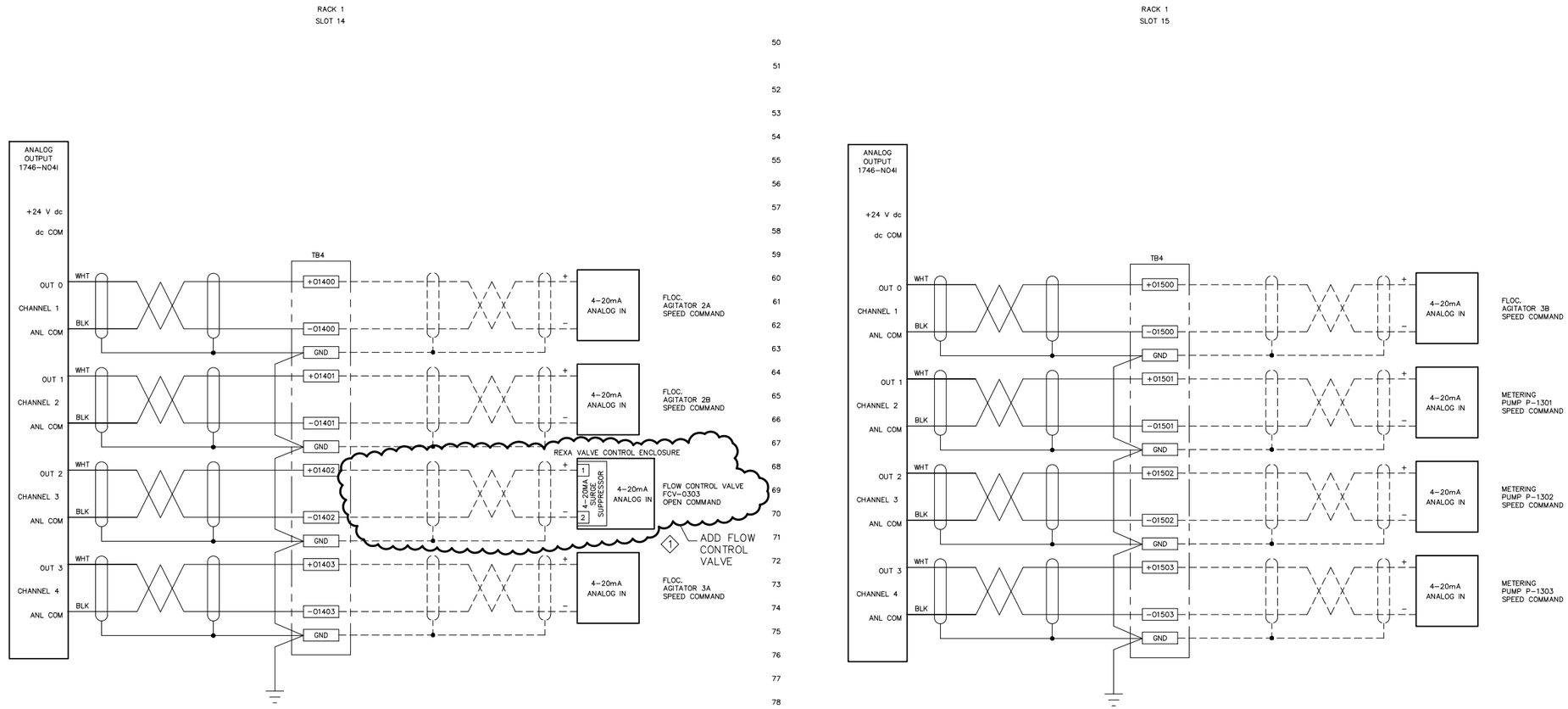

KEYED NOTES:
1. ADD REXA VALVE CONTROL ENCLOSURE FOR FLOW CONTROL VALVE FCV-0303.

ISSUE FOR BID

WOODARD & CURRAN
960 Washington Street, Suite 325N
Dedham, Massachusetts 02026
800.446.5518 | www.woodardcurran.com
COMMITMENT & INTEGRITY DRIVE RESULTS

THIS DOCUMENT IS THE PROPERTY OF WOODARD & CURRAN INC. AND ITS CLIENT. REPRODUCTION OR MODIFICATION WITHOUT WRITTEN PERMISSION IS PROHIBITED.

REV	DESCRIPTION	DATE
A	FOR MASSDEP REVIEW	07/18/14
B	ISSUE FOR BID	03/11/15

DESIGNED BY: DC
DRAWN BY: RPM
CHECKED BY: BCC
224802-I-213.dwg

PLC-2 CONTROL PANEL ANALOG OUTPUTS MODIFICATIONS

LOWELL REGIONAL WATER UTILITY
LOWELL, MASSACHUSETTS

WATER SYSTEM IMPROVEMENTS

JOB NO.: 224802.20
DATE: MARCH 2015
SCALE: NTS
SHEET: 17 OF 47

I-213

\\wc\shared\Projects\224802 Lowell MA - Water System Improvement PEF 2011\wip\Drawings\Controls\224802-I-213.dwg, Mar 03, 2015 - 1:53pm

BILL OF MATERIAL

ITEM	QTY	MANUFACTURER	PART NUMBER	DESCRIPTION	DESIGNATION
1	1	APC	BP1000	UNINTERRUPTIBLE POWER SYSTEM, 1000 VA	UPS
2	1	STAHLIN	STASPNN727218HWT	ENCLOSURE, NEMA 4X FIBERGLASS	
3	1	HOFFMAN	A-LF16M48	FLUORESCENT CABINET LIGHT, 48"	CABINET LIGHTING
4	2	HOFFMAN	A-LFSWD	CABINET LIGHT DOOR SWITCH	DOOR SWTCH
5	1	GRACE ENGINEERING	P-R2-F2RO	ETHERNET INTERFACE W/ 120VAC OUTLET, NEMA 4X	ETHERNET INTERFACE
6	1	TRIPP-LITE	SK6-6	8-OUTLET SURGE PROTECTED POWER STRIP	

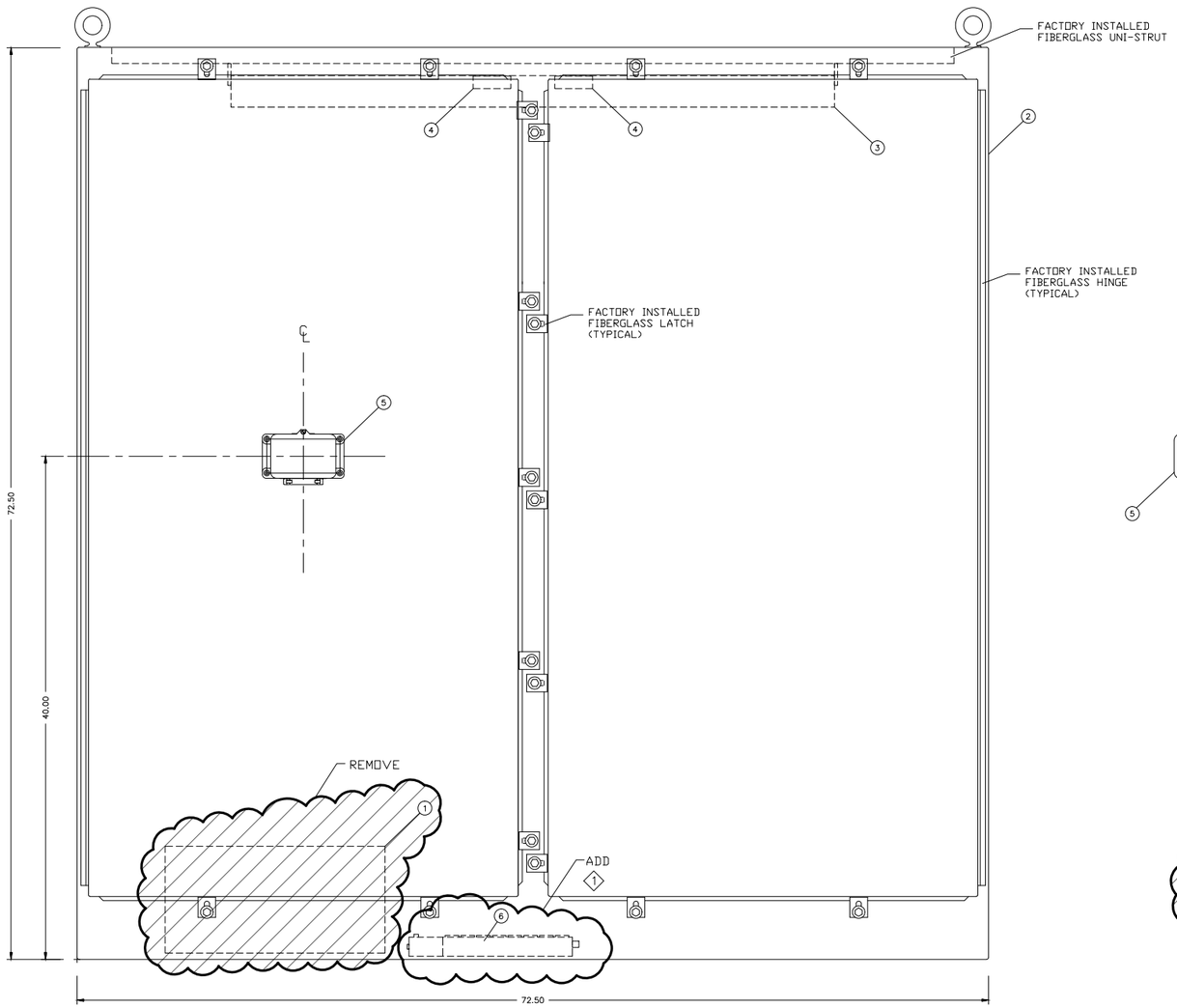

ENCLOSURE FRONT VIEW

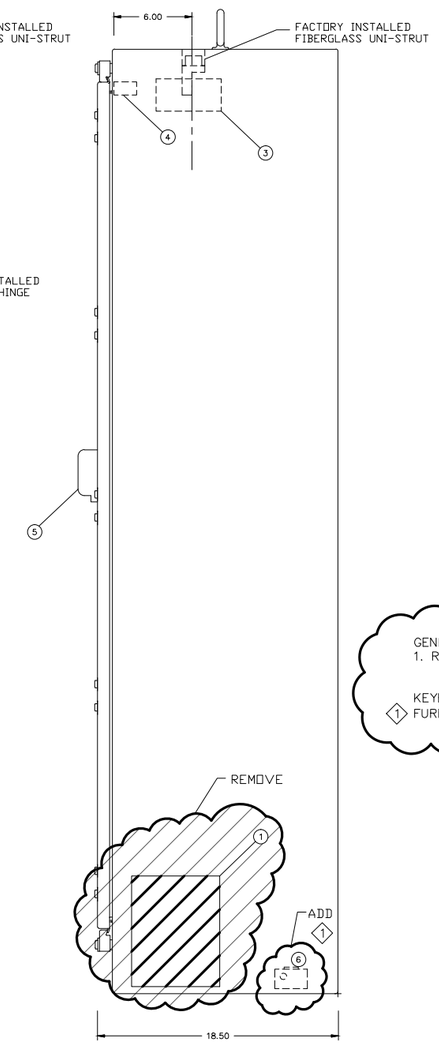

ENCLOSURE RIGHT SIDE VIEW

GENERAL NOTES:
1. REMOVE ITEM 1 FROM PANEL AND DISPOSE OF PROPERLY.

KEYED NOTES:
1. FURNISH AND INSTALL ITEM 6 IN PANEL (WIRING DETAIL ON DRAWING I-305).

ISSUE FOR BID

960 Washington Street, Suite 325N
Dedham, Massachusetts 02026
800.446.5518 | www.woodardcurran.com
WOODARD & CURRAN
COMMITMENT & INTEGRITY DRIVE RESULTS

THIS DOCUMENT IS THE PROPERTY OF WOODARD & CURRAN INC. AND ITS CLIENT. REPRODUCTION OR MODIFICATION WITHOUT WRITTEN PERMISSION IS PROHIBITED.

REV	DESCRIPTION	DATE
A	FOR MASSDEP REVIEW	07/18/14
B	ISSUE FOR BID	03/11/15

DESIGNED BY: DC
DRAWN BY: RPM
CHECKED BY: BCC
224802-I-302.dwg

PLC-3 CONTROL PANEL LAYOUT (EXTERIOR) MODIFICATIONS

LOWELL REGIONAL WATER UTILITY
LOWELL, MASSACHUSETTS

WATER SYSTEM IMPROVEMENTS

JOB NO.: 224802.20
DATE: MARCH 2015
SCALE: NTS
SHEET: 18 OF 47

I-302

\\wc\shared\Projects\224802 Lowell MA - Water System Improvement PEF 2011\wip\Drawings\Controls\224802-I-302.dwg, Mar 02, 2015 - 1:54pm

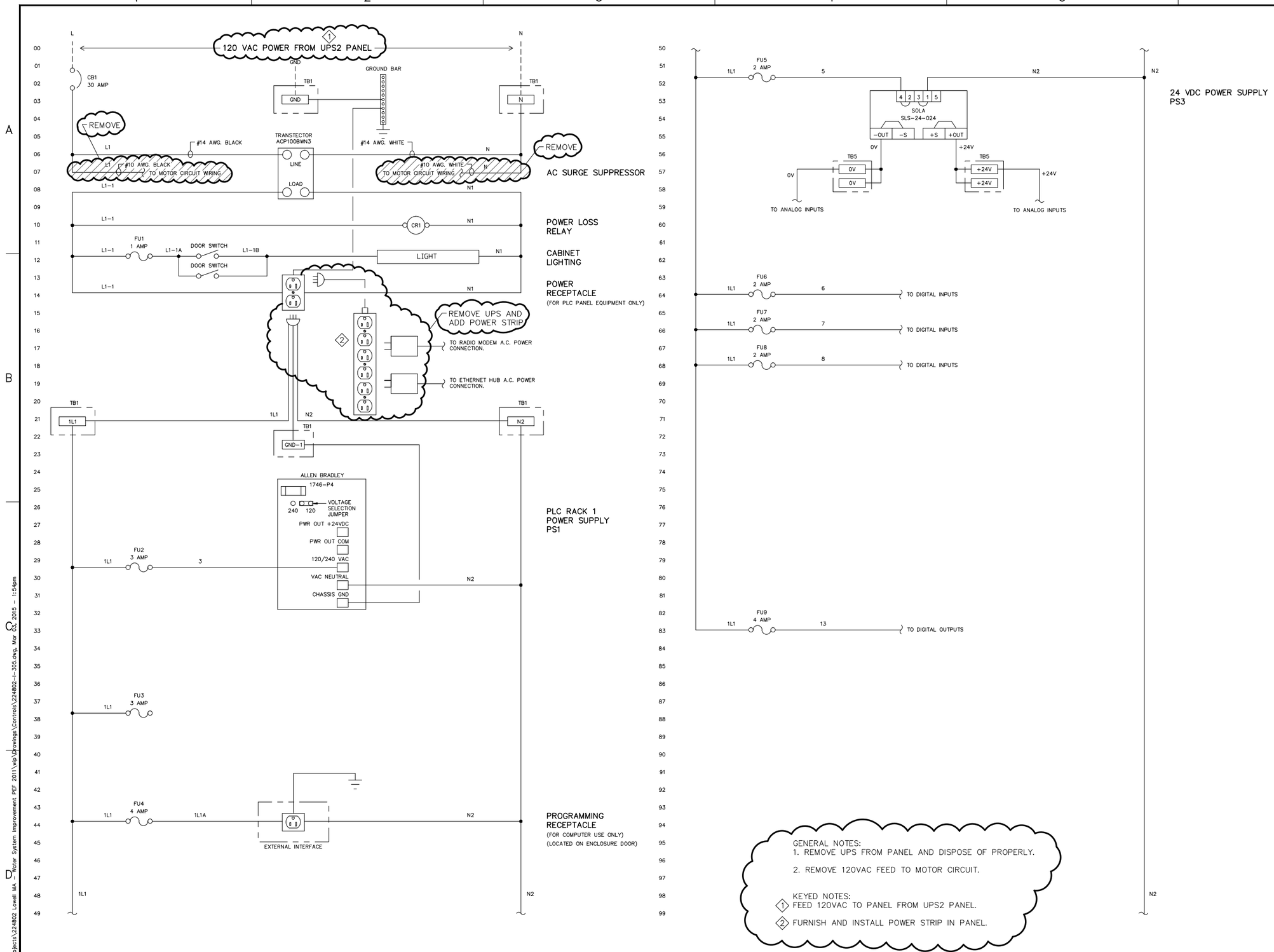

GENERAL NOTES:
1. REMOVE UPS FROM PANEL AND DISPOSE OF PROPERLY.
2. REMOVE 120VAC FEED TO MOTOR CIRCUIT.

KEYED NOTES:
1. FEED 120VAC TO PANEL FROM UPS2 PANEL.
2. FURNISH AND INSTALL POWER STRIP IN PANEL.

ISSUE FOR BID

WOODARD & CURRAN
960 Washington Street, Suite 325N
Dedham, Massachusetts 02026
800.446.5518 | www.woodardcurran.com
COMMITMENT & INTEGRITY DRIVE RESULTS

THIS DOCUMENT IS THE PROPERTY OF WOODARD & CURRAN INC. AND ITS CLIENT. REPRODUCTION OR MODIFICATION WITHOUT WRITTEN PERMISSION IS PROHIBITED.

REV	DESCRIPTION	DATE
B	ISSUE FOR BID	03/11/15
A	FOR MASSDEP REVIEW	07/18/14

DESIGNED BY: DC CHECKED BY: BCC
DRAWN BY: RPM 224802-I-305.dwg

PLC-3 CONTROL PANEL POWER DISTRIBUTION MODIFICATIONS

LOWELL REGIONAL WATER UTILITY
LOWELL, MASSACHUSETTS

WATER SYSTEM IMPROVEMENTS

JOB NO.: 224802.20
DATE: MARCH 2015
SCALE: NTS
SHEET: 19 OF 47

I-305

\\wc\shared\Projects\224802 Lowell MA - Water System Improvement PEF 2011\wip\Drawings\Controls\224802-I-305.dwg, Mar 02, 2015 - 1:54pm

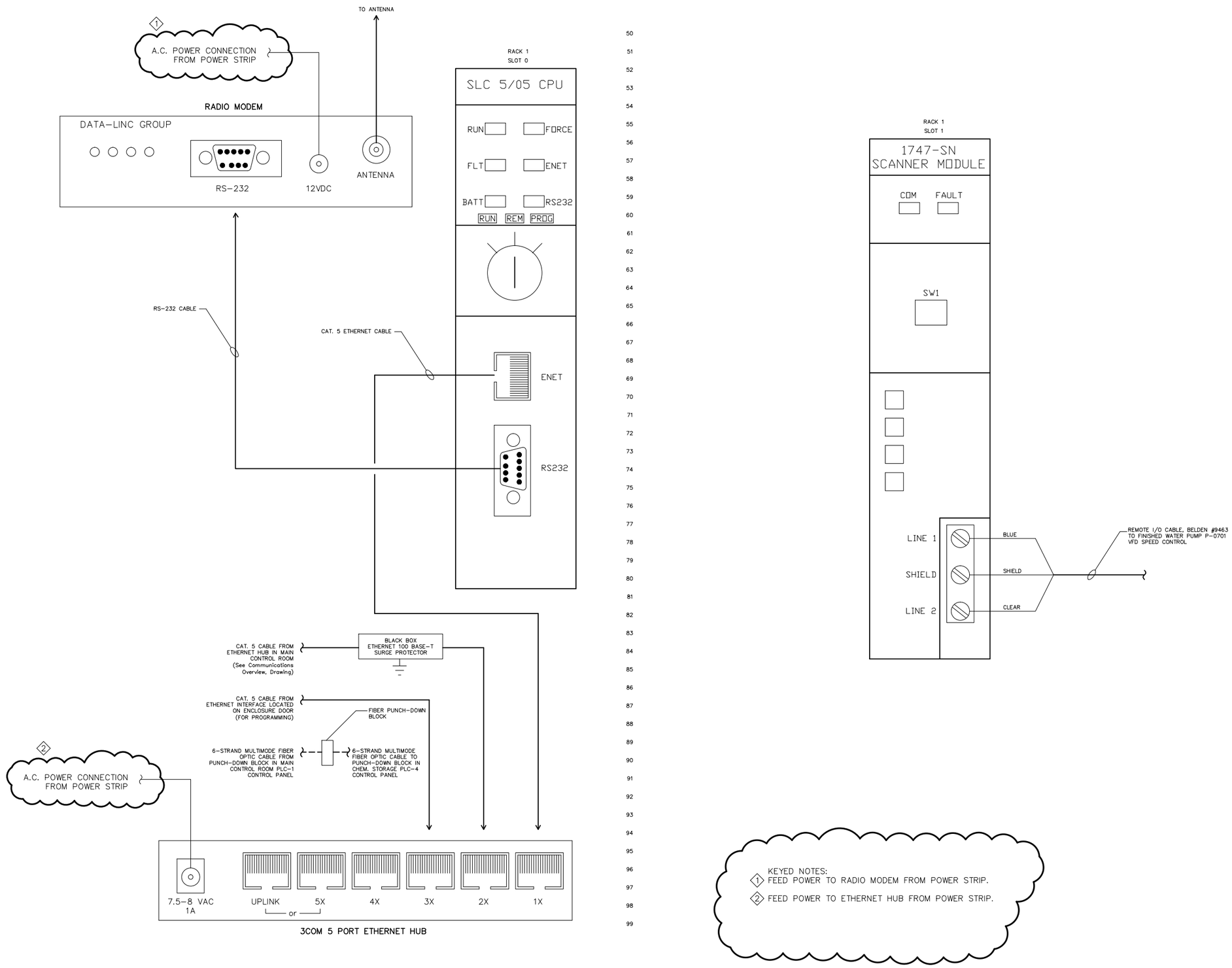

KEYED NOTES:
1. FEED POWER TO RADIO MODEM FROM POWER STRIP.
2. FEED POWER TO ETHERNET HUB FROM POWER STRIP.

ISSUE FOR BID

980 Washington Street, Suite 325N
Dedham, Massachusetts 02026
800.446.5518 | www.woodardcurran.com
WOODARD & CURRAN
COMMITMENT & INTEGRITY DRIVE RESULTS

THIS DOCUMENT IS THE PROPERTY OF WOODARD & CURRAN INC. AND ITS CLIENT. REPRODUCTION OR MODIFICATION WITHOUT WRITTEN PERMISSION IS PROHIBITED.

REV	DESCRIPTION	DATE
B	ISSUE FOR BID	03/11/15
A	FOR MASSDEP REVIEW	07/18/14

DESIGNED BY: DC
DRAWN BY: RPM
CHECKED BY: BCC
224802-I-306.dwg

PLC-3 CONTROL PANEL COMMUNICATIONS MODIFICATIONS

LOWELL REGIONAL WATER UTILITY
LOWELL, MASSACHUSETTS

WATER SYSTEM IMPROVEMENTS

JOB NO.: 224802.20
DATE: MARCH 2015
SCALE: NTS
SHEET: 20 OF 47

I-306

\\we\shared\Projects\224802 Lowell MA - Water System Improvement PEF 2011\wip\Drawings\Controls\224802-I-306.dwg, Mar 02, 2015 - 1:54pm

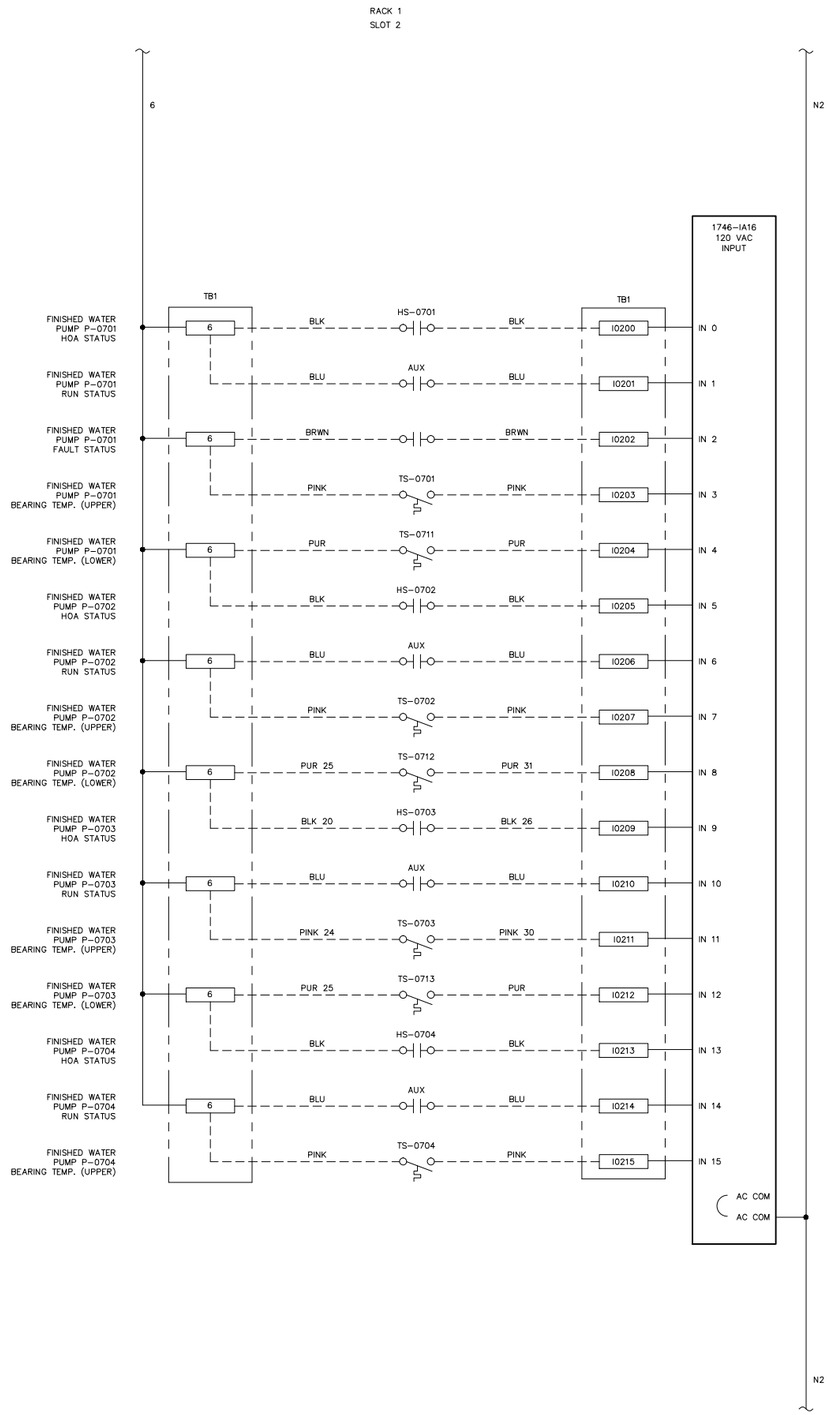

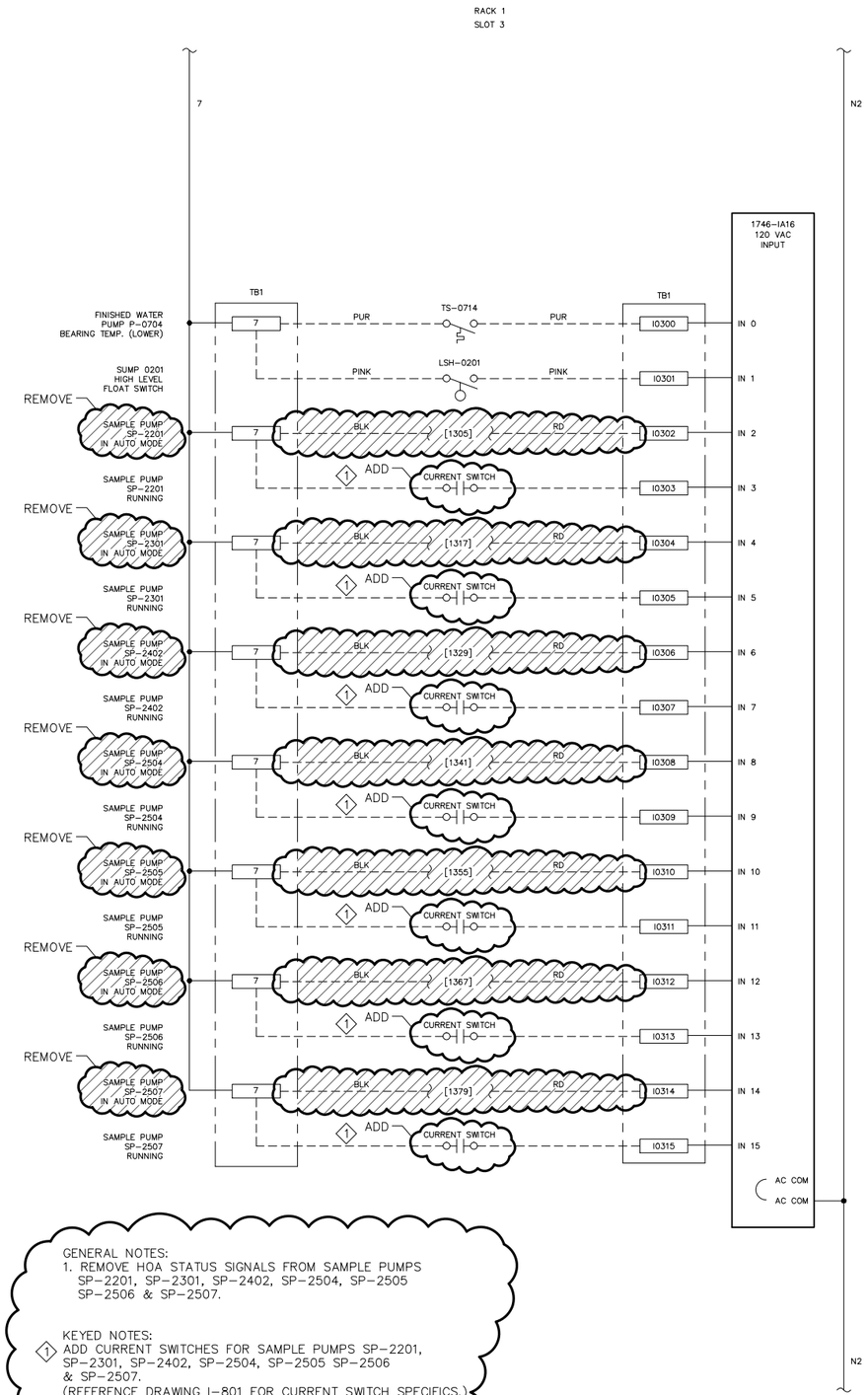

GENERAL NOTES:
1. REMOVE HOA STATUS SIGNALS FROM SAMPLE PUMPS SP-2201, SP-2301, SP-2402, SP-2504, SP-2505 SP-2506 & SP-2507.

KEYED NOTES:
1. ADD CURRENT SWITCHES FOR SAMPLE PUMPS SP-2201, SP-2301, SP-2402, SP-2504, SP-2505 SP-2506 & SP-2507.
(REFERENCE DRAWING I-801 FOR CURRENT SWITCH SPECIFICS.)

ISSUE FOR BID

960 Washington Street, Suite 325N
Dedham, Massachusetts 02026
800.446.5518 | www.woodardcurran.com
WOODARD & CURRAN
COMMITMENT & INTEGRITY DRIVE RESULTS

THIS DOCUMENT IS THE PROPERTY OF WOODARD & CURRAN INC. AND ITS CLIENT. REPRODUCTION OR MODIFICATION WITHOUT WRITTEN PERMISSION IS PROHIBITED.

REV	DESCRIPTION	DATE
B	ISSUE FOR BID	03/11/15
A	FOR MASSDEP REVIEW	07/18/14

DESIGNED BY: DC CHECKED BY: BCC
DRAWN BY: RPM 224802-I-307.dwg

PLC-3 CONTROL PANEL DIGITAL INPUTS MODIFICATIONS

LOWELL REGIONAL WATER UTILITY
LOWELL, MASSACHUSETTS

WATER SYSTEM IMPROVEMENTS

JOB NO.: 224802.20
DATE: MARCH 2015
SCALE: NTS
SHEET: 21 OF 47

I-307

\\wc\shared\Projects\224802 Lowell MA - Water System Improvement PEF 2011\wsip\Drawings\Controls\224802-I-307.dwg, Mar 03, 2015 - 1:54pm

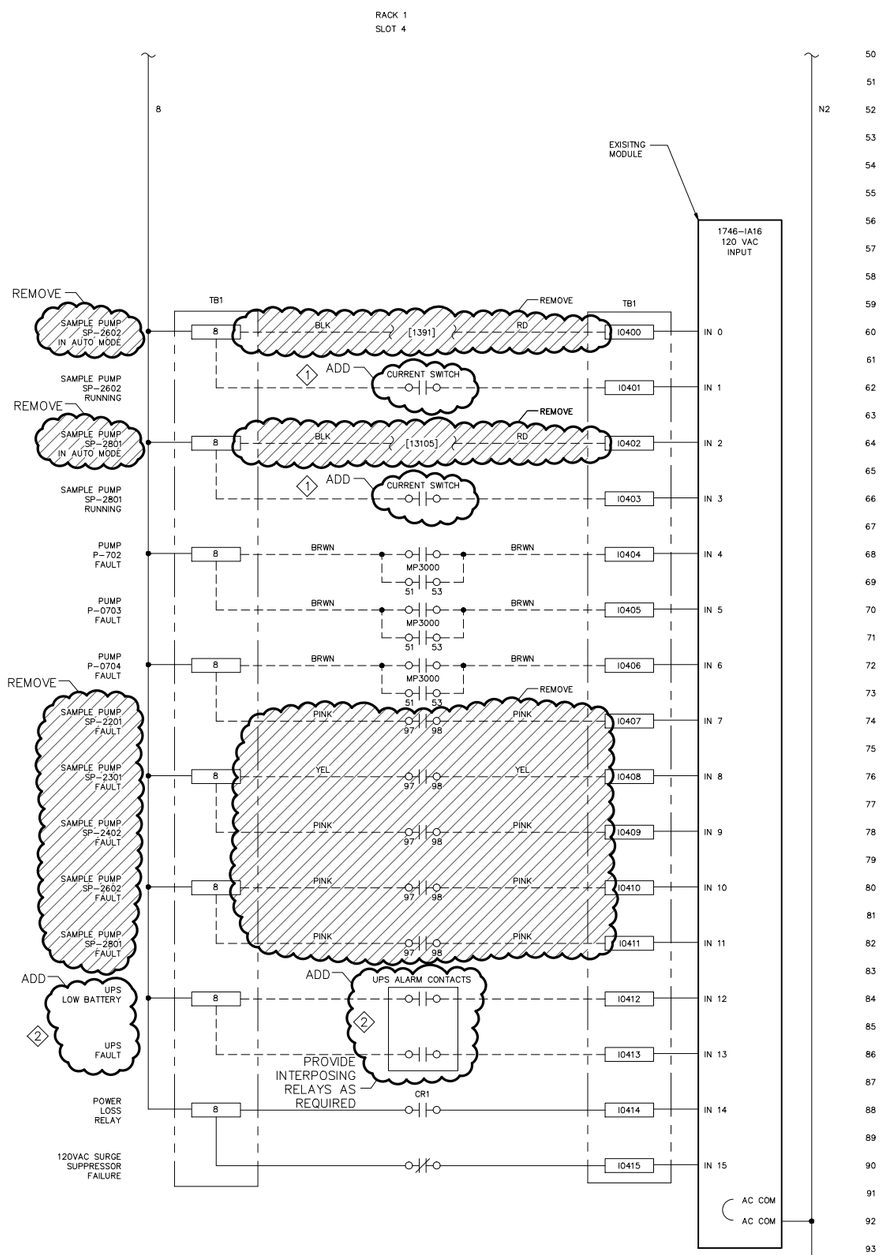

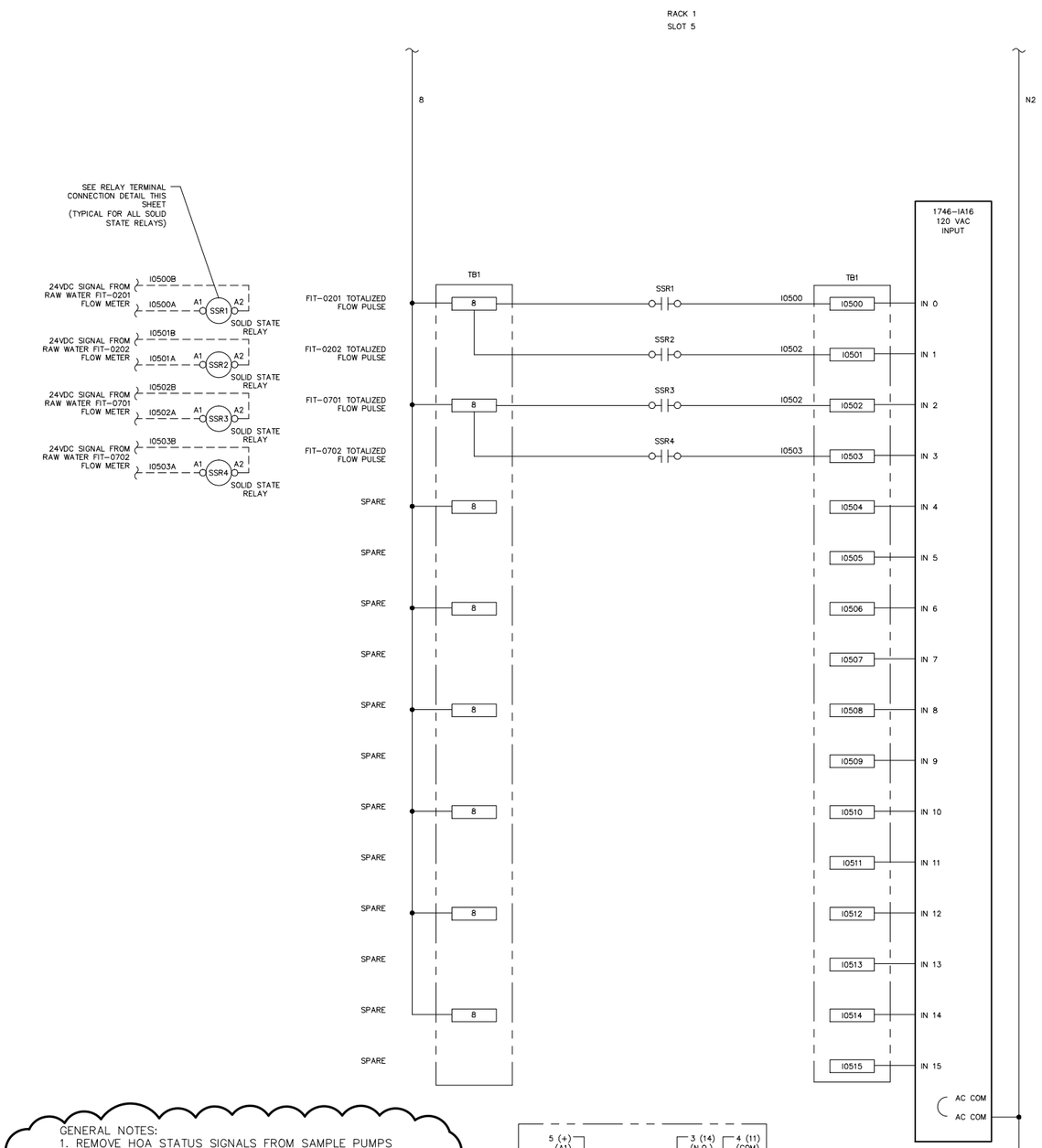

GENERAL NOTES:
1. REMOVE HOA STATUS SIGNALS FROM SAMPLE PUMPS SP-2602 & SP-2801.
2. REMOVE FAULT SIGNALS FROM SAMPLE PUMPS SP-2201, SP-2301, SP-2402, SP-2602 & SP-2801.

KEYED NOTES:
1. ADD CURRENT SWITCHES FOR SAMPLE PUMPS SP-2602 & SP-2801. (REFERENCE DRAWING I-801 FOR CURRENT SWITCH SPECIFICS.)
2. ADD UPS STATUS INPUTS FOR LOW BATTERY & FAULT. PROVIDE INTERPOSING RELAYS AS REQUIRED FOR UPS STATUS INPUTS.

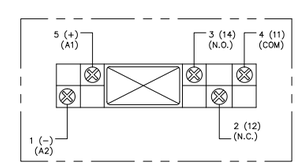

ALLEN BRADLEY 700-HK
1-POLE RELAY TERMINAL
CONNECTION DETAIL

ISSUE FOR BID

960 Washington Street, Suite 325N
Dedham, Massachusetts 02026
800.446.5518 | www.woodardcurran.com

COMMITMENT & INTEGRITY DRIVE RESULTS

THIS DOCUMENT IS THE PROPERTY OF WOODARD & CURRAN INC. AND ITS CLIENT. REPRODUCTION OR MODIFICATION WITHOUT WRITTEN PERMISSION IS PROHIBITED.

REV	DESCRIPTION	DATE
B	ISSUE FOR BID	03/11/15
A	FOR MASSDEP REVIEW	07/18/14

DESIGNED BY: DC CHECKED BY: BCC
DRAWN BY: RPM 224802-I-308.dwg

PLC-3 CONTROL PANEL DIGITAL INPUTS MODIFICATIONS

LOWELL REGIONAL WATER UTILITY
LOWELL, MASSACHUSETTS

WATER SYSTEM IMPROVEMENTS

JOB NO.: 224802.20
DATE: MARCH 2015
SCALE: NTS
SHEET: 22 OF 47

I-308

\\wc\shared\Projects\224802 Lowell MA - Water System Improvement PEF 2011\wip\Drawings\Controls\224802-I-308.dwg, Mar 02, 2015 - 1:54pm

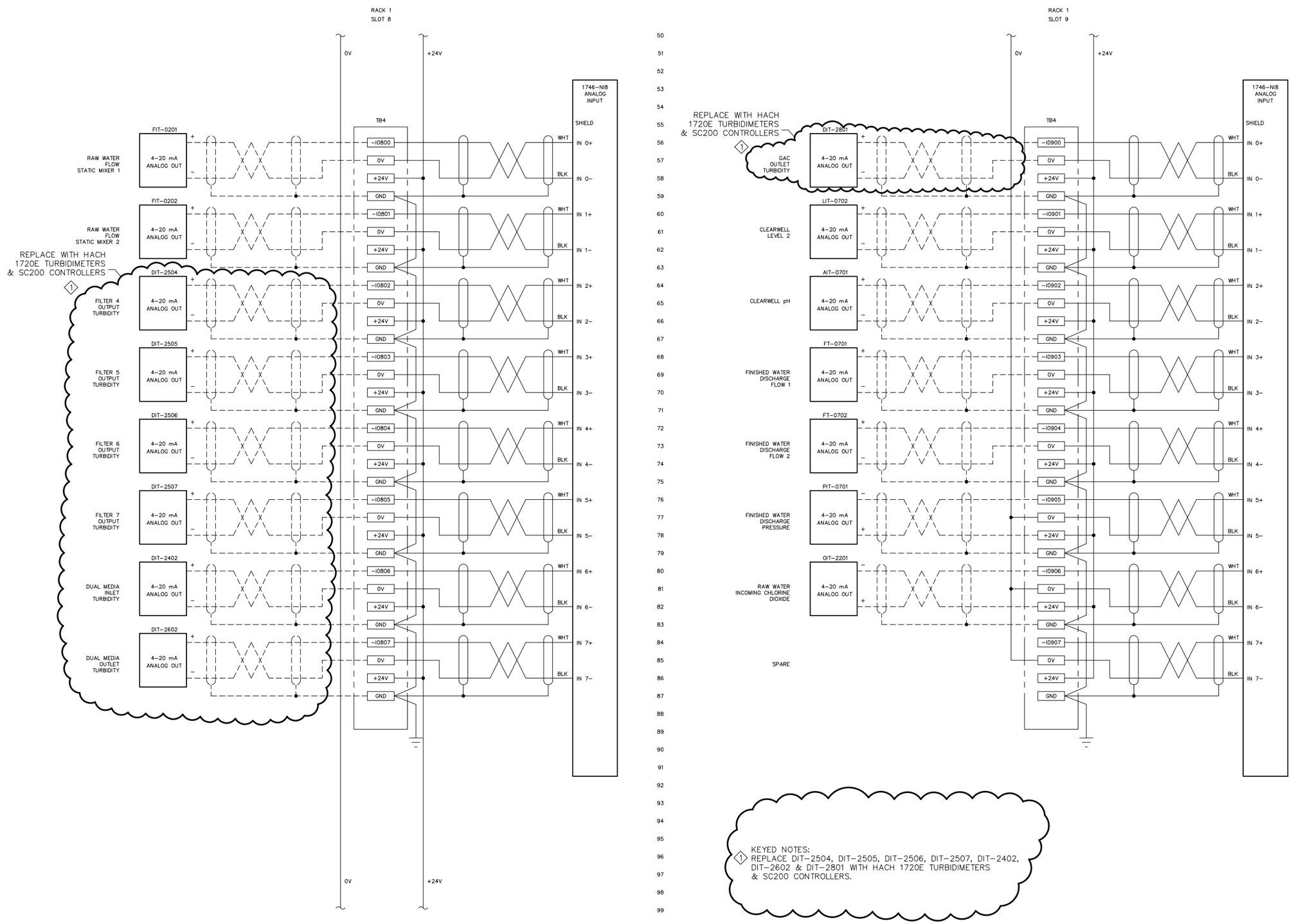

KEYED NOTES:
1. REPLACE DIT-2504, DIT-2505, DIT-2506, DIT-2507, DIT-2402, DIT-2602 & DIT-2801 WITH HACH 1720E TURBIDIMETERS & SC200 CONTROLLERS.

ISSUE FOR BID

960 Washington Street, Suite 325N
Dedham, Massachusetts 02026
800.446.5518 | www.woodardcurran.com
WOODARD & CURRAN
COMMITMENT & INTEGRITY DRIVE RESULTS

THIS DOCUMENT IS THE PROPERTY OF WOODARD & CURRAN INC. AND ITS CLIENT. REPRODUCTION OR MODIFICATION WITHOUT WRITTEN PERMISSION IS PROHIBITED.

REV	DESCRIPTION	DATE
B	ISSUE FOR BID	03/11/15
A	FOR MASSDEP REVIEW	07/18/14

DESIGNED BY: DC CHECKED BY: BCC
DRAWN BY: RPM 224802-I-310.dwg

PLC-3 CONTROL PANEL ANALOG INPUTS MODIFICATIONS

LOWELL REGIONAL WATER UTILITY
LOWELL, MASSACHUSETTS

WATER SYSTEM IMPROVEMENTS

JOB NO.: 224802.20
DATE: MARCH 2015
SCALE: NTS
SHEET: 23 OF 47

I-310

\\wc\shared\Projects\224802 Lowell MA - Water System Improvement PEF 2011\Vis\Drawings\Controls\224802-I-310.dwg, Mar 03, 2015 - 1:54pm

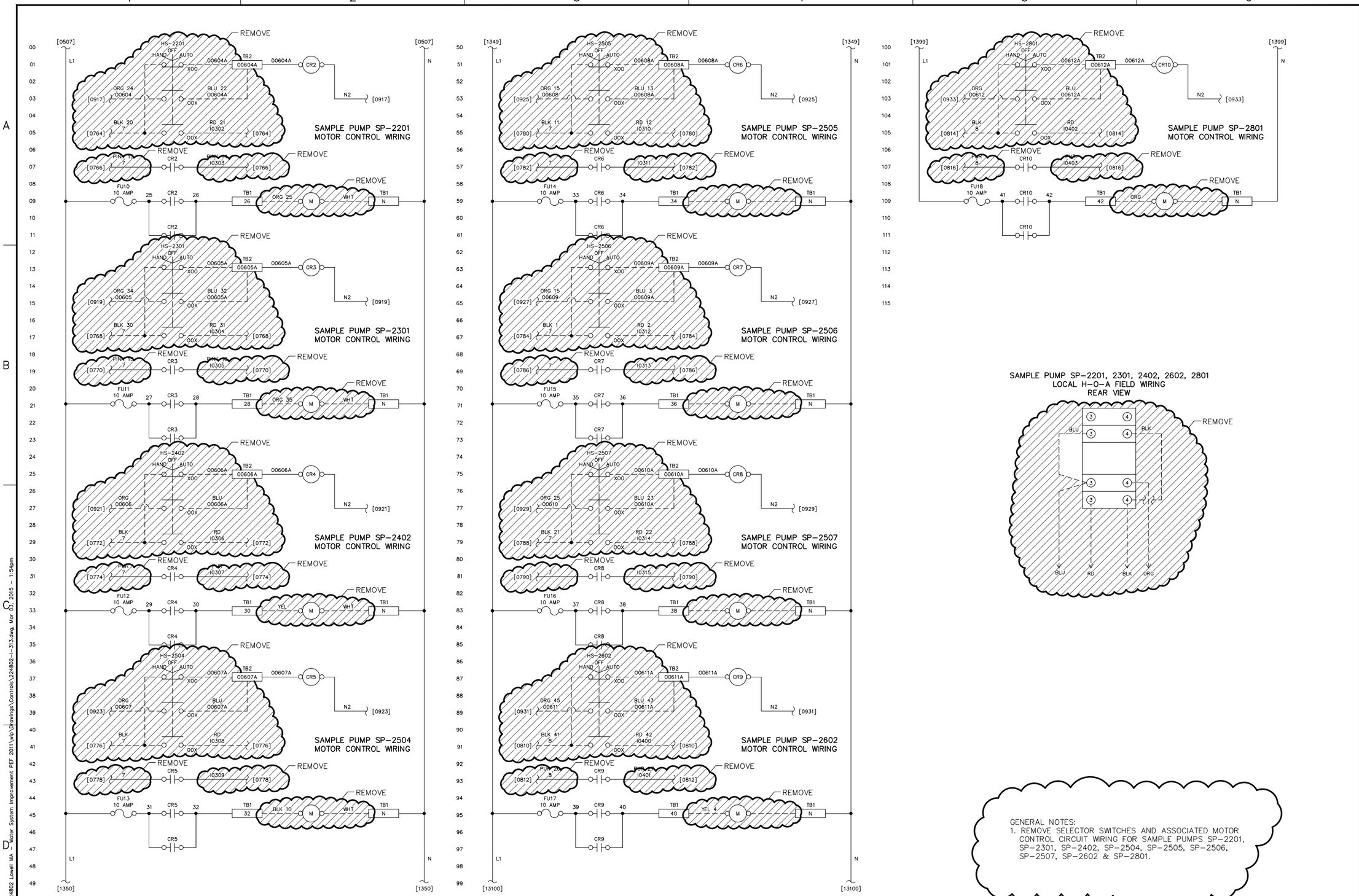

GENERAL NOTES:
1. REMOVE SELECTOR SWITCHES AND ASSOCIATED MOTOR CONTROL CIRCUIT WIRING FOR SAMPLE PUMPS SP-2201, SP-2301, SP-2402, SP-2504, SP-2505, SP-2506, SP-2507, SP-2602 & SP-2801.

ISSUE FOR BID

WOODARD & CURRAN
960 Washington Street, Suite 325N
Dedham, Massachusetts 02026
800.446.5518 | www.woodardcurran.com
COMMITMENT & INTEGRITY DRIVE RESULTS

THIS DOCUMENT IS THE PROPERTY OF WOODARD & CURRAN INC. AND ITS CLIENT. REPRODUCTION OR MODIFICATION WITHOUT WRITTEN PERMISSION IS PROHIBITED.

REV	DESCRIPTION	DATE
A	FOR MASSDEP REVIEW	07/18/14
B	ISSUE FOR BID	03/11/15

DESIGNED BY: DC CHECKED BY: BCC
DRAWN BY: RPM 224802-I-313.dwg

PLC-3 CONTROL PANEL MOTOR CIRCUIT WIRING MODIFICATIONS

LOWELL REGIONAL WATER UTILITY
LOWELL, MASSACHUSETTS

WATER SYSTEM IMPROVEMENTS

JOB NO.: 224802.20
DATE: MARCH 2015
SCALE: NTS
SHEET: 24 OF 47

I-313

\\wc\shared\Projects\224802 Lowell MA - Water System Improvement PEF 2011\sip\Drawings\Controls\224802-I-313.dwg, Mar 03, 2015 - 1:54pm

BILL OF MATERIAL

ITEM	QTY.	MANUFACTURER	PART NUMBER	DESCRIPTION	DESIGNATION
1	1	HOFFMAN	A72P72	BACK PANEL, 68" x 68"	SUB PANEL
2	1	HOFFMAN	A74H7212LP3PT	ENCLOSURE, NEMA 4, 74.00" x 72.00" x 12.00"	ENCLOSURE
3					
4	1	ALLEN BRADLEY	1746-C7	I/O RACK INTERCONNECT CABLE, 6 INCH	
5	4	ALLEN BRADLEY	1492-DR6	DIN RAIL, RAISED	TB2, TB3, TB5
6	1	HOFFMAN	ALF16M48R	LIGHT KIT	ENCLOSURE LIGHT
7	2	HOFFMAN	ALFSWD	DOOR SWITCH	ENCLOSURE LIGHT
8	1	ALLEN BRADLEY	1746-A13	SLC 500 PLC 13-SLOT I/O RACK	RACK 1
9	1	ALLEN BRADLEY	1747-L551	SLC 500 PLC PROCESSOR (CPU), 16K MEM.	RACK 1, SLOT 0
10	2	ALLEN BRADLEY	1746-P4	SLC 500 PLC POWER SUPPLY	PWS1, PWS2
11	3	ALLEN BRADLEY	1746-NI8	ANALOG INPUT MODULE, 8 CH.	RACK 1, SLOTS 14-16
12	7	ALLEN BRADLEY	1746-IA16	120VAC DIGITAL INPUT MODULE, 16 PT.	RACK 1, SLOTS 2-8
13	4	ALLEN BRADLEY	1746-OW16	RELAY OUTPUT MODULE, 16 PT.	RACK 1, SLOTS 10-13
14	4	ALLEN BRADLEY	1746-NO8I	ANALOG OUTPUT MODULE, 8 CH.	RACK 2, SLOTS 17-20
15	1	ALLEN BRADLEY	1746-A10	SLC 500 PLC 10-SLOT I/O RACK	RACK 1
16	280	ALLEN BRADLEY	1492-JD3	TERMINAL BLOCK 2 TIER	TB1, TB2, TB3, TB5, TB6
17	110	ALLEN BRADLEY	1492-EBJD3	TERMINAL BLOCK END BARRIER, 2 TIER	TB1, TB2, TB3, TB5, TB6
18	14	ALLEN BRADLEY	1492-EAJ35	TERMINAL BLOCK END ANCHOR	TB1, TB2, TB3, TB5, TB6
19	11	ALLEN BRADLEY	1492-CJJ5-10	TERMINAL BLOCK JUMPER, 10 POLE FOR 2 TIER	TB1, TB2, TB3
20	95	ALLEN BRADLEY	1492-JG3	TERMINAL BLOCK, GROUNDING	TB1, TB5, TB6
21	1	ALLEN BRADLEY	199-DR1	DIN RAIL, STANDARD	TB4
22	1	SYLVANIA	F40T12	FLUORESCENT BULB, 40 WATT	ENCLOSURE LIGHT
23	20	ALLEN BRADLEY	1492-H4	FUSED TERMINAL BLOCK, NEON INDICATOR	FU1-FU20
24	5	ALLEN BRADLEY	1492-N37	FUSED TERMINAL BLOCK END BARRIER	FU1, FU20, FU301F, FU401F
25	3	ALLEN BRADLEY	1492-N49	FUSE BLOCK SIDE JUMPERS 10 POLE	FU1-FU20, FU301A-F, FU401A-F
26	3	ALLEN BRADLEY	1492-SJS	SIDE JUMPERS INSULATING SLEEVE	FU1-FU20, FU301A-F, FU401A-F
27	2	ALLEN BRADLEY	1492-M5X12	TERMINAL BLOCK BLANK MARKING TAGS, 1 TIER, 100 CT.	TB1, TB5, TB6
28	6	ALLEN BRADLEY	1492-M5X8	TERMINAL BLOCK BLANK MARKING TAGS, 2 TIER, 100 CT.	TB1, TB2, TB3, TB5, TB6
29	1	ALLEN BRADLEY	1492-SM8X12	FUSE BLOCK BLANK MARKING TAGS, 100 CT.	FU1-FU20, FU301A-F, FU401A-F
30	3	ALLEN BRADLEY	1746-N2	I/O RACK BLANK SLOT FILLER.	RACK 1,SLOTS 9, 21, 22
31	3	ALLEN BRADLEY	1492-DR7	DIN RAIL, RAISED, ANGLED 30 DEGREE	TB1, TB6
32	1	ALLEN BRADLEY	1747-SN	REMOTE I/O SCANNER MODULE	RACK 1, SLOT 1
33	12	ALLEN BRADLEY	1492-H5	FUSED TERMINAL BLOCK, LED INDICATOR	FU301A-F, FU401A-F
34	130 FT.	BELDEN	9463	2 COND. SHIELDED CABLE	SEE SHEET I-106
35	1	ALLEN-BRADLEY	1489-A1C200	CIRCUIT BREAKER, 20 AMP, SINGLE POLE	CB1
36	2	SOLA	SDP2-24-100T	POWER SUPPLY, 120VAC IN, 24VDC, 2 AMPS OUT	PWS3, PWS4
37	24FT	PANDUIT	G4X4LG6	WIRING DUCT, 4"W x 4"H	
38	24FT	PANDUIT	C4LG6	WIRING DUCT COVER, 4"W	
39	30FT	PANDUIT	G3X4LG6	WIRING DUCT, 3"W x 4"H	
40	30FT	PANDUIT	C3LG6	WIRING DUCT COVER, 3"W	
41	2	SQUARE D	PK12GTA	GROUND BAR	
42	1	PASS & SEYMOUR	26361-I	SINGLE RECEPTACLE, 20 AMP, IVORY	UPS POWER RECEPTACLE
43					
44	1	PASS & SEYMORE	2094-I	GFCI DUPLEX RECEPTACLE, 20 AMP, IVORY	PROGRAMMING RECEPTACLE
45					
46	1	RACO	809	4" BOX COVER	UPS POWER & PROG. RECEPT.
47	1	RACO	1002	LOCKNUT, 1/2"	UPS POWER & PROG. RECEPT.
48	1	RACO	1402	INSULATING BUSHING, 1/2"	UPS POWER & PROG. RECEPT.
49	1	RACO	1662	CHASE NIPPLE, 1/2"	UPS POWER & PROG. RECEPT.
50	1	RACO	232	4" SQUARE BOX	UPS POWER & PROG. RECEPT.
51					
52	20	BUSSMAN	AGC-1	FUSE, 1A, 250V, FAST ACTING	FU1, FU6-FU12, FU17
53	20	BUSSMAN	AGC-3	FUSE, 3A, 250V, FAST ACTING	FU2-FU5, FU13-FU16, FU18-FU20
54	25	BUSSMAN	AGC-1/2	FUSE, 1/2A, 250V, FAST ACTING	FU301A-F, FU401A-F

ITEM	QTY.	MANUFACTURER	PART NUMBER	DESCRIPTION	DESIGNATION
55	1	APC	SMT1500	BATTERY BACK-UP POWER SUPPLY, 1500VA	UPS
56	2	PHOENIX CONTACT	2817738	VALVETRAB 120VAC SURGE PROTECTOR BASE UNIT	SUP1
57	4	PHOENIX CONTACT	2807586	VALVETRAB 120VAC SURGE PROTECTOR PLUG	SUP1 PLUS 2 SPARE
58	5	PHOENIX CONTACT	2838186	TERMITRAB ANALOG LOOP SURGE PROTECTOR	SUP2 - SUP4 PLUS 2 SPARE
59	5	PHOENIX CONTACT	2838995	ANALOG LOOP SURGE PROTECTOR END COVER	SUP2 - SUP4 PLUS 2 SPARE
60	1	PHOENIX CONTACT	1051003	ANALOG LOOP SURGE PROTECTOR MARKING STRIP	SUP2 - SUP4
61	2	PANEL FABRICATOR		NAMEPLATE, PHENOLIC, ENGRAVED	SEE SCHEDULE, SHEET I-102
62	4	ALLEN BRADLEY	1492-J16	TERMINAL BLOCK 1 TIER	TB1
63	2	ALLEN BRADLEY	1492-EBJ16	TERMINAL BLOCK END BARRIER, 1 TIER	TB1
64	1	ALLEN BRADLEY	1492-M7X12	TERMINAL BLOCK BLANK MARKING TAGS, 1 TIER, 100 CT.	TB1
65	2	ALLEN BRADLEY	1492-CJJ12-2	TERMINAL BLOCK JUMPER, 2 POLE FOR 1 TIER	TB1
66	1	ALLEN BRADLEY	1492-JG16	TERMINAL BLOCK, GROUNDING	TB1
67	1	GRAINGER	1FD91	#14,3 TYPE SJO POWER CORD, 8 FT.	SEE SHEET I-105
68					
69					
70					
71	1	APC	AP9631	NETWORK CARD	FOR UPS STATUS
72	1	APC	AP9810	RELAY CONTACT ACCESSORY	FOR UPS STATUS
73	1	CINCH	DB25P	MALE 25-PIN D-SUBMINIATURE CONNECTOR	FOR UPS SMARTSLOT CONNECTIONS
74	1	CINCH	DB24659	25-PIN D-SUBMINIATURE CONNECTOR HOOD	FOR UPS SMARTSLOT CONNECTIONS
75	6FT	PANDUIT	SD4H6	WIREDUCT DIVIDER WALL	
76	1	PANDUIT	DB-C	DIVIDER WALL MOUNTING BASE, 100 CT.	
77					
78					
79					
80					
81	1	B&B ELECTRONICS	EIR-306	ETHERNET SWITCH, 10/100 Mbps, 6 COPPER PORTS	
82	1	BLACK BOX	EVNSL51-0006	CAT5E ETHERNET STANDARD PATCH CORD, 6 FT.	SEE SHEET I-106
83	1	BLACK BOX	EVNSL51-0010	CAT5E ETHERNET STANDARD PATCH CORD, 10 FT.	SEE SHEET I-106
84	1	GRACE ENGINEERING	P-Q17-M3RF5	COMMUNICATIONS INTERFACE PORT	
85					
86					
87					
88					
89	70	ALLEN BRADLEY	700-HK36A1-4	RELAY SPDT, 120VAC COIL	PFR, CR0-47, CR56-71 PLUS 5 SPARE
90					
91					
92					
93	12	ALLEN BRADLEY	700-HK36Z24-4	RELAY SPDT, 24VDC COIL	CR-UPS1, CR-UPS2, CR48-55 PLUS 2 SPARE
94	1	ALLEN BRADLEY	700-N41	RELAY BLANK MARKING TAGS, 546 CT.	
95	82	ALLEN BRADLEY	700-HN121	RELAY SOCKET	
96					
97					
98	1	EMEDCO	QS3743	WARNING LABEL "ARC FLASH AND SHOCK HAZARD"	
99	1	EMEDCO	SQS110	WARNING LABEL "DEVICE POWERED FROM SEVERAL SOURCES"	
100					
101					
102					
103					
104					
105					
106					
107					
108					

GENERAL NOTES
1. THE ITEMS IN THE BILL OF MATERIAL TABLE ON THIS SHEET ARE EXISTING.
2. CONTRACTOR TO REMOVE EXISTING ITEMS 55, 71, 72

ISSUE FOR BID

WOODARD & CURRAN
960 Washington Street, Suite 325N
Dedham, Massachusetts 02026
800.446.5518 | www.woodardcurran.com
COMMITMENT & INTEGRITY DRIVE RESULTS

THIS DOCUMENT IS THE PROPERTY OF WOODARD & CURRAN INC. AND ITS CLIENT. REPRODUCTION OR MODIFICATION WITHOUT WRITTEN PERMISSION IS PROHIBITED.

REV	DESCRIPTION	DATE
A	FOR MASSDEP REVIEW	07/18/14
B	ISSUE FOR BID	03/11/15

DESIGNED BY: DC CHECKED BY: BCC
DRAWN BY: RPM 224802-I-401.dwg

PLC-4 CONTROL PANEL
BILL OF MATERIAL
MODIFICATIONS

LOWELL REGIONAL WATER UTILITY
LOWELL, MASSACHUSETTS

WATER SYSTEM IMPROVEMENTS

JOB NO.: 224802.20
DATE: MARCH 2015
SCALE: NTS
SHEET: 25 OF 47

I-401

\\wc\shared\Projects\224802 Lowell MA - Water System Improvement PEF 2011\wsb\Drawings\Controls\224802-I-401.dwg, Mar 03, 2015 - 1:54pm

NAMEPLATE SCHEDULE			
ITEM	DIMENSION	DESCRIPTION	FABRICATION COMMENTS
A	5" x 1"	PLC-4	NAMEPLATE TO BE BLACK WITH WHITE LETTERS WITH ADHESIVE BACK. TEXT SIZE TO BE .5
B	4" x .75"	SINGLE OUTLET FOR UPS CONNECTION ONLY GFCI OUTLET FOR PROGRAMMING ONLY	NAMEPLATE TO BE RED WITH WHITE LETTERS WITH ADHESIVE BACK. TEXT SIZE TO BE .12

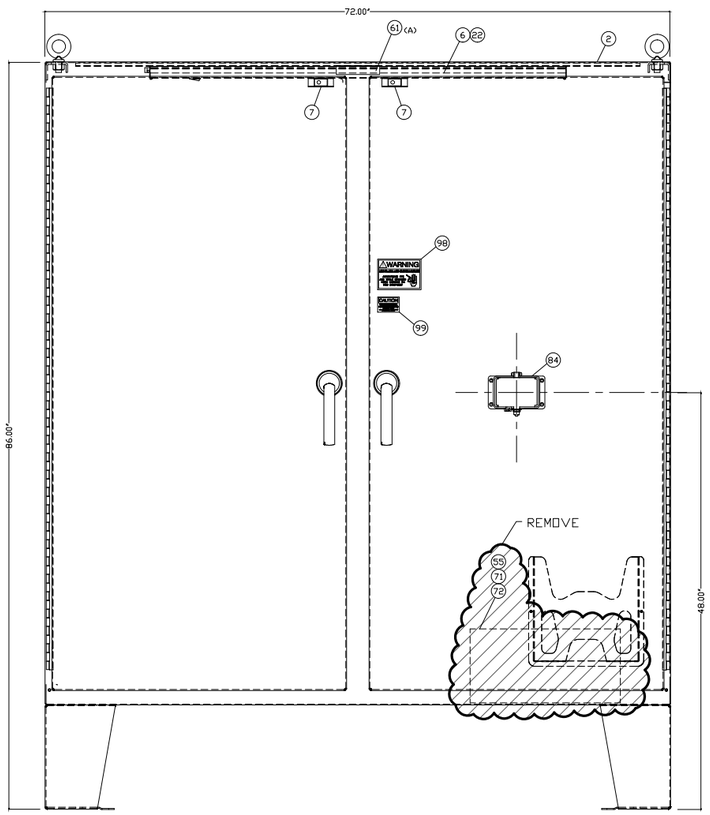

ENCLOSURE FRONT VIEW

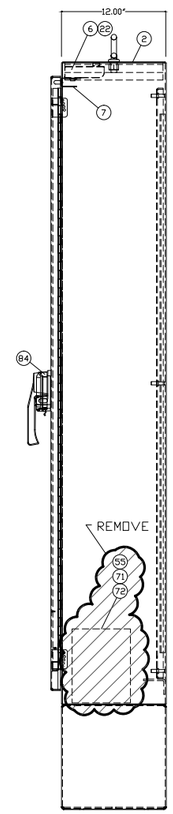

ENCLOSURE RIGHT SIDE VIEW

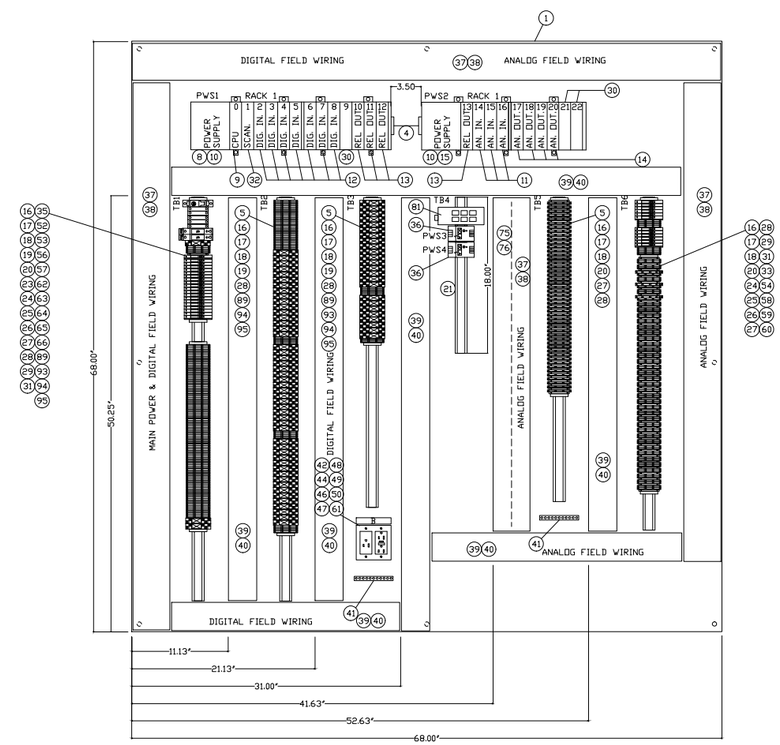

SUB PANEL

GENERAL NOTES:
1. THE ENCLOSURE AND SUB PANEL LAYOUTS SHOWN ON THIS SHEET ARE EXISTING.
2. CONTRACTOR TO REMOVE ITEMS 55, 71 & 72 FROM PANEL AND DISPOSE OF PROPERLY.

ISSUE FOR BID

980 Washington Street, Suite 325N
Dedham, Massachusetts 02026
800.446.5518 | www.woodardcurran.com
WOODARD & CURRAN
COMMITMENT & INTEGRITY DRIVE RESULTS

THIS DOCUMENT IS THE PROPERTY OF WOODARD & CURRAN INC. AND ITS CLIENT. REPRODUCTION OR MODIFICATION WITHOUT WRITTEN PERMISSION IS PROHIBITED.

REV	DESCRIPTION	DATE
B	ISSUE FOR BID	03/11/15
A	FOR MASSDEP REVIEW	07/18/14

DESIGNED BY: DC CHECKED BY: BCC
DRAWN BY: RPM 224802-I-402.dwg

PLC-4 CONTROL PANEL LAYOUT MODIFICATIONS

LOWELL REGIONAL WATER UTILITY
LOWELL, MASSACHUSETTS

WATER SYSTEM IMPROVEMENTS

JOB NO.: 224802.20
DATE: MARCH 2015
SCALE: NTS
SHEET: 26 OF 47

I-402

\\wc\shared\Projects\224802 Lowell MA - Water System Improvement PEF 2011\sip\Drawings\Controls\224802-I-402.dwg, Mar 03, 2015 - 1:54pm

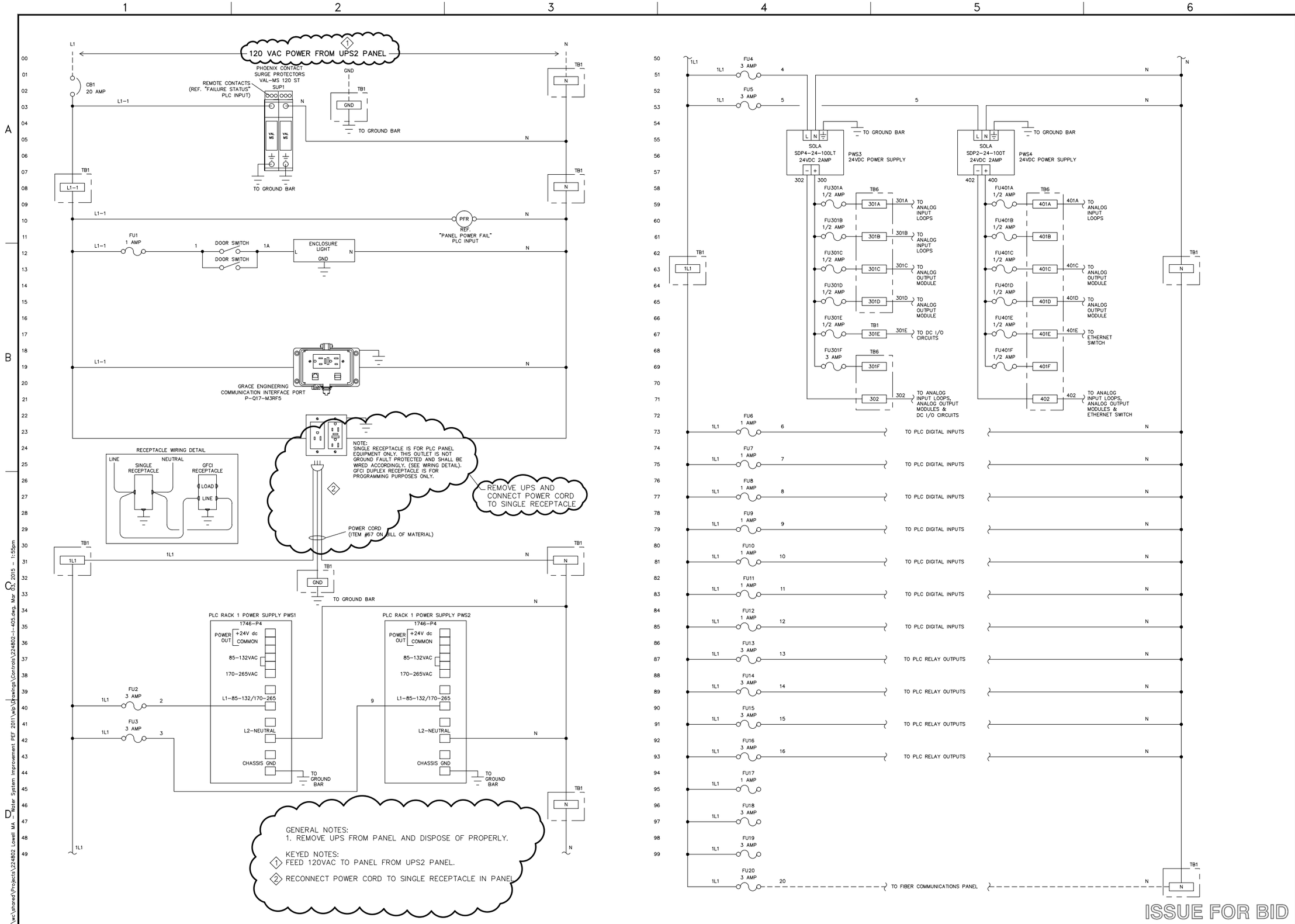

ISSUE FOR BID

WOODARD & CURRAN
960 Washington Street, Suite 325N
Dedham, Massachusetts 02026
800.446.5518 | www.woodardcurran.com
COMMITMENT & INTEGRITY DRIVE RESULTS

THIS DOCUMENT IS THE PROPERTY OF WOODARD & CURRAN INC. AND ITS CLIENT. REPRODUCTION OR MODIFICATION WITHOUT WRITTEN PERMISSION IS PROHIBITED.

REV	DESCRIPTION	DATE
B	ISSUE FOR BID	03/11/15
A	FOR MASSDEP REVIEW	07/18/14

DESIGNED BY: DC CHECKED BY: BCC
DRAWN BY: RPM 224802-I-405.dwg

PLC-4 CONTROL PANEL POWER DISTRIBUTION MODIFICATIONS

LOWELL REGIONAL WATER UTILITY
LOWELL, MASSACHUSETTS

WATER SYSTEM IMPROVEMENTS

JOB NO.: 224802.20
DATE: MARCH 2015
SCALE: NTS
SHEET: 27 OF 47

I-405

\\wc\shared\Projects\224802 Lowell MA - Water System Improvement PEF 2011\wsp\Drawings\Controls\224802-I-405.dwg, Mar 03, 2015 - 1:55pm

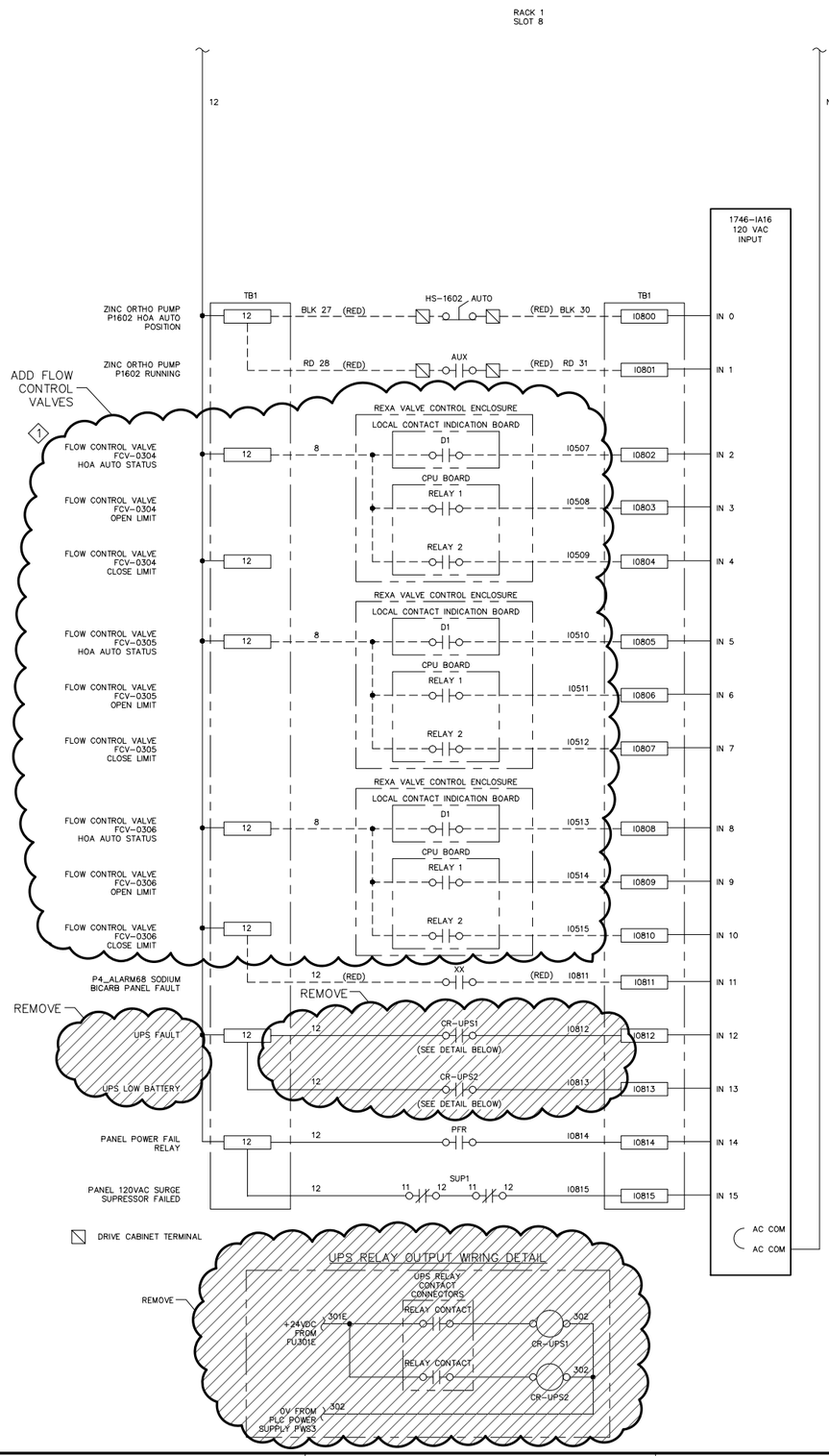

RACK 1
SPARE SLOT 9

GENERAL NOTES:
1. REMOVE UPS FAULT AND LOW BATTERY STATUS RELAYS AND ASSOCIATED WIRING.

KEYED NOTES:
1. ADD REXA VALVE CONTROL ENCLOSURES FOR FLOW CONTROL VALVES FCV-0304, FCV-0305, FCV-0306.

ISSUE FOR BID

WOODARD & CURRAN
960 Washington Street, Suite 325N
Dedham, Massachusetts 02026
800.446.5518 | www.woodardcurran.com
COMMITMENT & INTEGRITY DRIVE RESULTS

THIS DOCUMENT IS THE PROPERTY OF WOODARD & CURRAN INC. AND ITS CLIENT. REPRODUCTION OR MODIFICATION WITHOUT WRITTEN PERMISSION IS PROHIBITED.

REV	DESCRIPTION	DATE
B	ISSUE FOR BID	03/11/15
A	FOR MASSDEP REVIEW	07/18/14

DESIGNED BY: DC
DRAWN BY: RPM
CHECKED BY: BCC
224802-I-410.dwg

PLC-4 CONTROL PANEL DIGITAL INPUTS MODIFICATIONS

LOWELL REGIONAL WATER UTILITY
LOWELL, MASSACHUSETTS

WATER SYSTEM IMPROVEMENTS

JOB NO.: 224802.20
DATE: MARCH 2015
SCALE: NTS
SHEET: 28 OF 47

I-410

\\we\shared\Projects\224802 Lowell MA Water System Improvement PEF 2011\wip\Drawings\Controls\224802-I-410.dwg, Mar 02, 2015 - 1:55pm

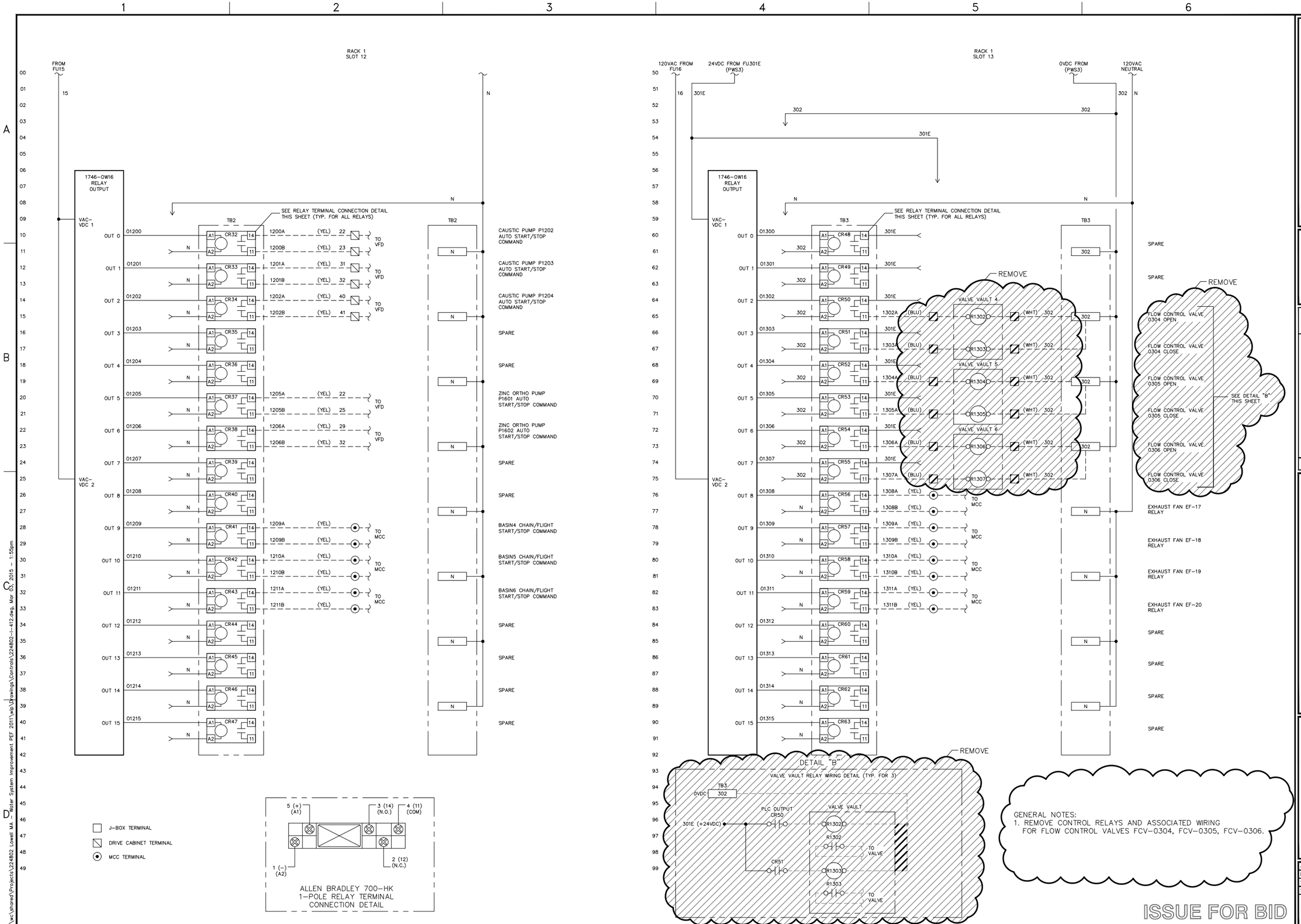

WOODARD & CURRAN
980 Washington Street, Suite 325N
Dedham, Massachusetts 02026
800.446.5518 | www.woodardcurran.com
COMMITMENT & INTEGRITY DRIVE RESULTS

THIS DOCUMENT IS THE PROPERTY OF WOODARD & CURRAN INC. AND ITS CLIENT. REPRODUCTION OR MODIFICATION WITHOUT WRITTEN PERMISSION IS PROHIBITED.

REV	DESCRIPTION	DATE
B	ISSUE FOR BID	03/11/15
A	FOR MASSDEP REVIEW	07/18/14

DESIGNED BY: DC
DRAWN BY: RPM
CHECKED BY: BCC
224802-I-412.dwg

PLC-4 CONTROL PANEL RELAY OUTPUTS MODIFICATIONS

LOWELL REGIONAL WATER UTILITY
LOWELL, MASSACHUSETTS

WATER SYSTEM IMPROVEMENTS

JOB NO.: 224802.20
DATE: MARCH 2015
SCALE: NTS
SHEET: 29 OF 47

I-412

\\wc\shared\Projects\224802 Lowell MA - Water System Improvement PEF 2011\wip\Drawings\Controls\224802-I-412.dwg, Mar 02, 2015 - 1:55pm

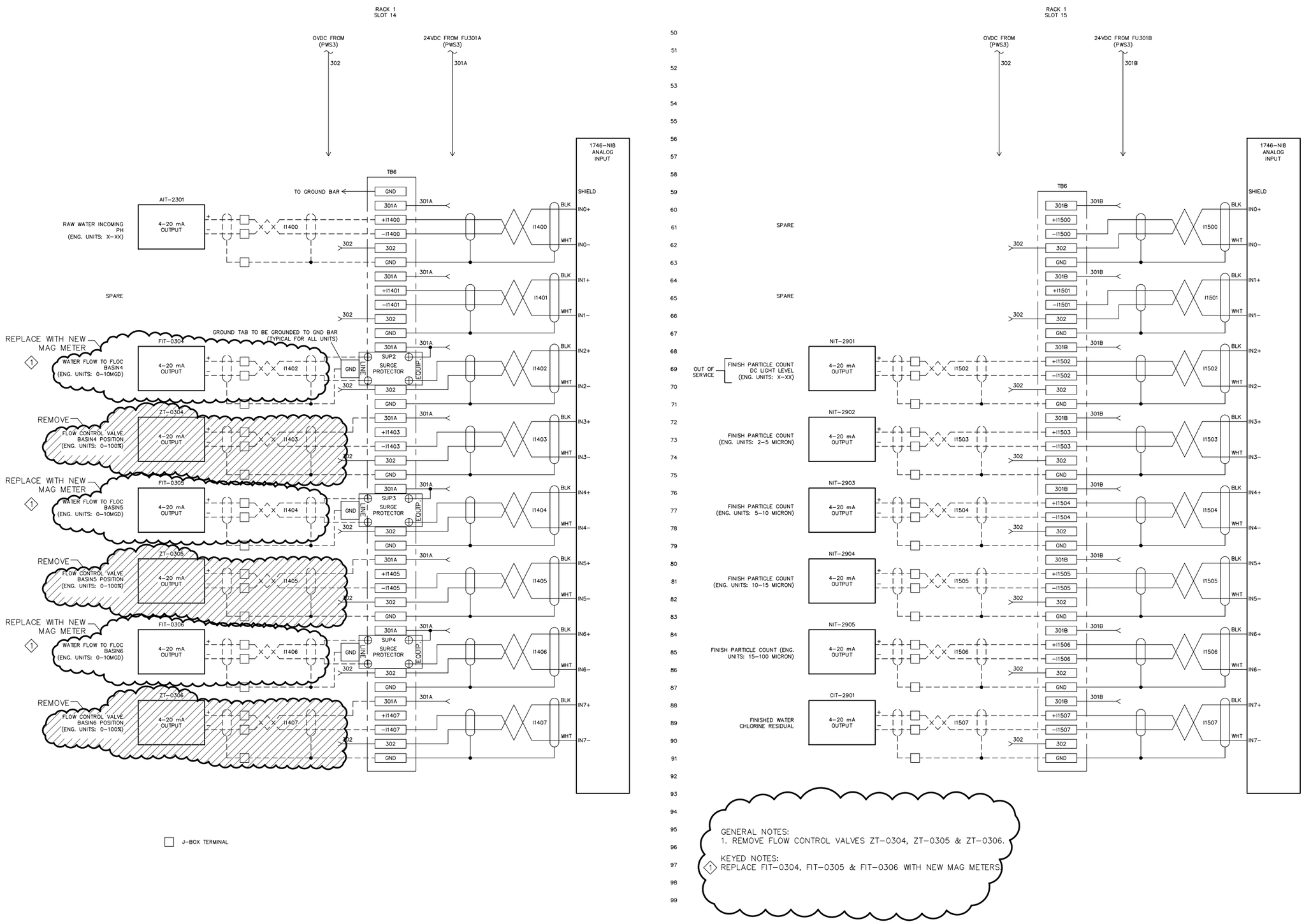

GENERAL NOTES:
1. REMOVE FLOW CONTROL VALVES ZT-0304, ZT-0305 & ZT-0306.

KEYED NOTES:
1. REPLACE FIT-0304, FIT-0305 & FIT-0306 WITH NEW MAG METERS.

ISSUE FOR BID

WOODARD & CURRAN
960 Washington Street, Suite 325N
Dedham, Massachusetts 02026
800.446.5518 | www.woodardcurran.com
COMMITMENT & INTEGRITY DRIVE RESULTS

THIS DOCUMENT IS THE PROPERTY OF WOODARD & CURRAN INC. AND ITS CLIENT. REPRODUCTION OR MODIFICATION WITHOUT WRITTEN PERMISSION IS PROHIBITED.

REV	DESCRIPTION	DATE
B	ISSUE FOR BID	03/11/15
A	FOR MASSDEP REVIEW	07/18/14

DESIGNED BY: DC
DRAWN BY: RPM
CHECKED BY: BCC
224802-I-413.dwg

PLC-4 CONTROL PANEL ANALOG INPUTS MODIFICATIONS

LOWELL REGIONAL WATER UTILITY
LOWELL, MASSACHUSETTS

WATER SYSTEM IMPROVEMENTS

JOB NO.: 224802.20
DATE: MARCH 2015
SCALE: NTS
SHEET: 30 OF 47

I-413

\\we\shared\Projects\224802 Lowell MA - Water System Improvement PEF 2011\wip\Drawings\Controls\224802-I-413.dwg, Mar 02, 2015 - 11:55am

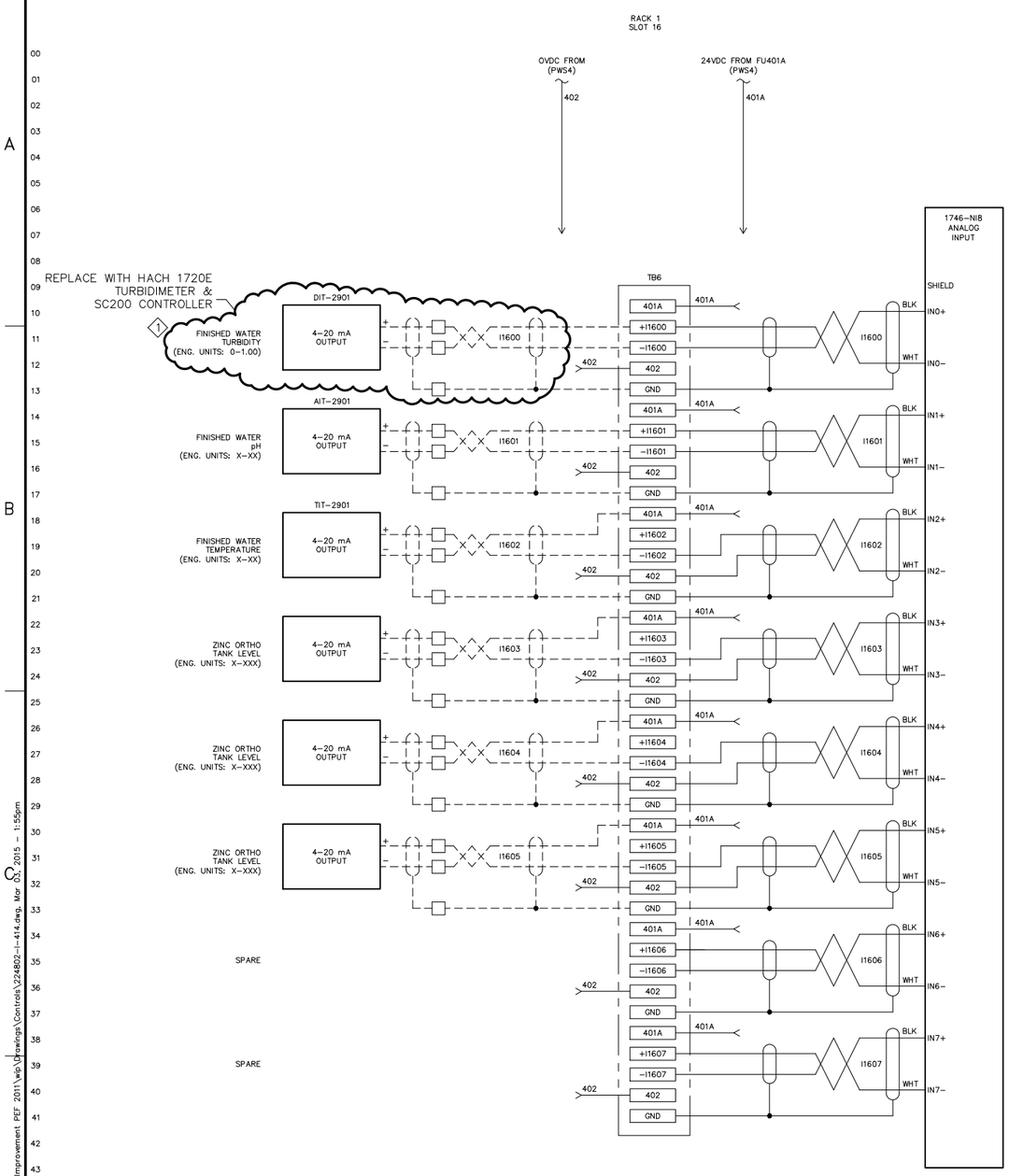

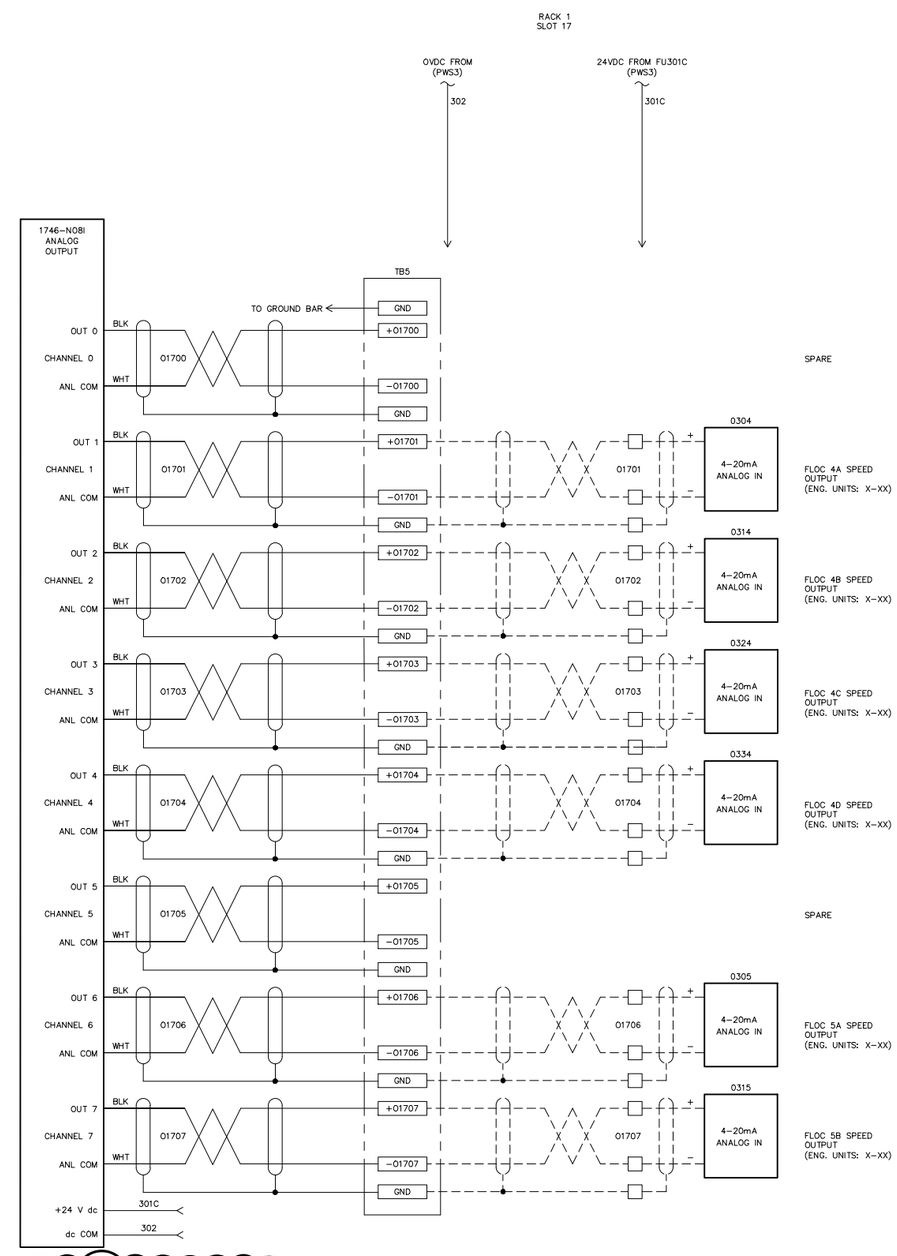

KEYED NOTES:
1. REPLACE DIT-2901 WITH HACH 1720E TURBIDIMETER & SC200 CONTROLLER.

NOTE:
THE MODULE NORMALLY RECEIVES 24VDC POWER FROM THE BACKPLANE.
TO MINIMIZE THE LOAD ON THE BACKPLANE POWER SUPPLY, AN EXTERNAL SUPPLY IS RECOMMENDED.
IF EXTERNAL POWER IS USED, THE J4 JUMPER MUST BE SET TO PINS 2 & 3. THE JUMPER IS LOCATED IN THE BOTTOM RIGHT CORNER OF THE MODULE'S CIRCUIT BOARD.

ISSUE FOR BID

WOODARD & CURRAN
960 Washington Street, Suite 325N
Dedham, Massachusetts 02026
800.446.5518 | www.woodardcurran.com
COMMITMENT & INTEGRITY DRIVE RESULTS

THIS DOCUMENT IS THE PROPERTY OF WOODARD & CURRAN INC. AND ITS CLIENT. REPRODUCTION OR MODIFICATION WITHOUT WRITTEN PERMISSION IS PROHIBITED.

REV	DESCRIPTION	DATE
B	ISSUE FOR BID	03/11/15
A	FOR MASSDEP REVIEW	07/18/14

DESIGNED BY: DC
DRAWN BY: RPM
CHECKED BY: BCC
224802-I-414.dwg

PLC-4 CONTROL PANEL ANALOG INPUTS & OUTPUTS MODIFICATIONS

LOWELL REGIONAL WATER UTILITY
LOWELL, MASSACHUSETTS

WATER SYSTEM IMPROVEMENTS

JOB NO.: 224802.20
DATE: MARCH 2015
SCALE: NTS
SHEET: 31 OF 47

I-414

\\we\shared\Projects\224802 Lowell MA Water System Improvement PEF 2011\wip\Drawings\Controls\224802-I-414.dwg, Mar 02, 2015 - 11:55am

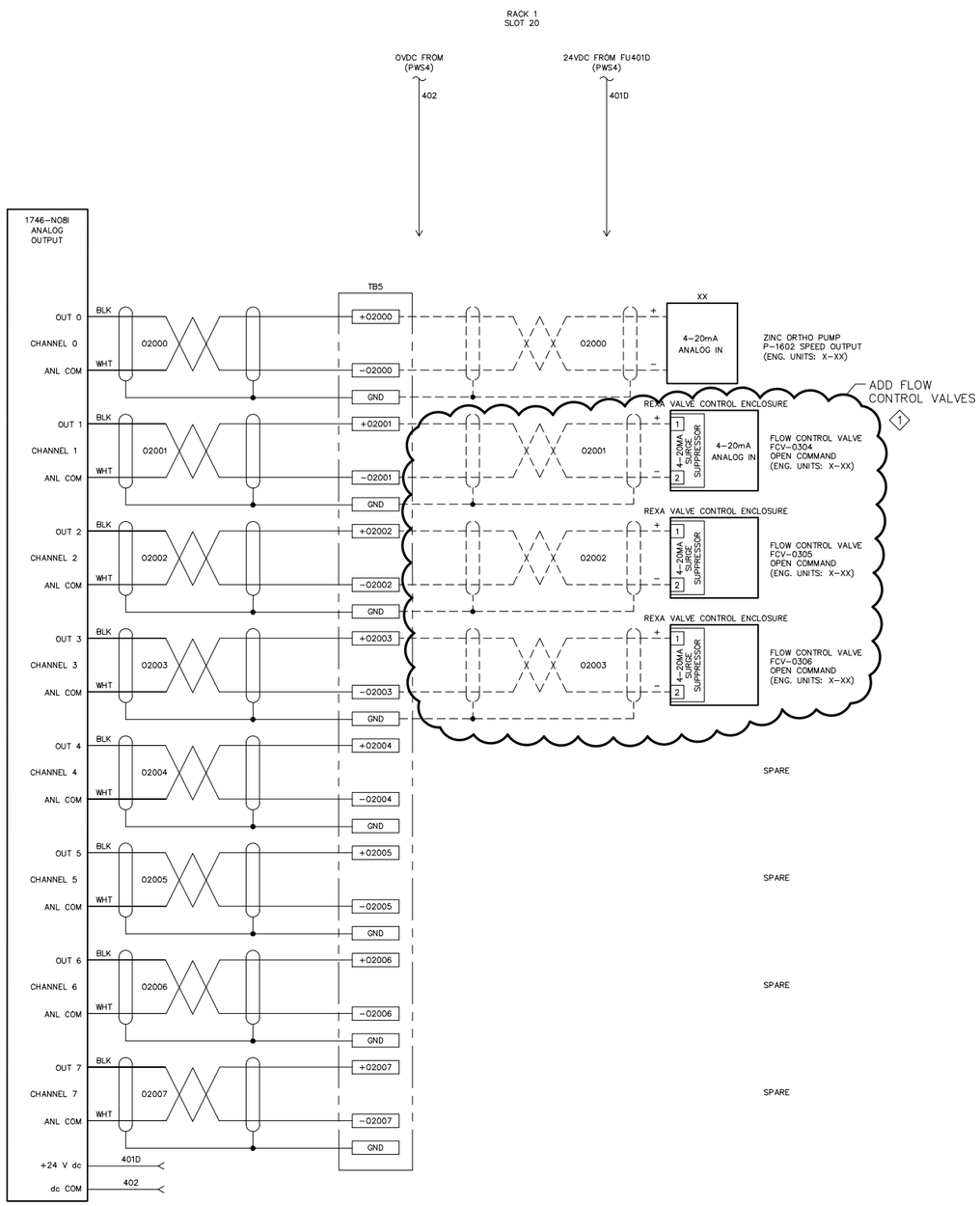

NOTE:
THE MODULE NORMALLY RECEIVES 24VDC POWER FROM THE BACKPLANE.
TO MINIMIZE THE LOAD ON THE BACKPLANE POWER SUPPLY, AN EXTERNAL SUPPLY IS RECOMMENDED.
IF EXTERNAL POWER IS USED, THE J4 JUMPER MUST BE SET TO PINS 2 & 3. THE JUMPER IS LOCATED IN THE BOTTOM RIGHT CORNER OF THE MODULE'S CIRCUIT BOARD.

RACK 1
SPARE SLOT 21

INTENTIONALLY LEFT BLANK

KEYED NOTES:
1. ADD REXA VALVE CONTROL ENCLOSURES FOR FLOW CONTROL VALVES FCV-0304, FCV-0305, FCV-0306.

ISSUE FOR BID

WOODARD & CURRAN
960 Washington Street, Suite 325N
Dedham, Massachusetts 02026
800.446.5518 | www.woodardcurran.com
COMMITMENT & INTEGRITY DRIVE RESULTS

THIS DOCUMENT IS THE PROPERTY OF WOODARD & CURRAN INC. AND ITS CLIENT. REPRODUCTION OR MODIFICATION WITHOUT WRITTEN PERMISSION IS PROHIBITED.

REV	DESCRIPTION	DATE
B	ISSUE FOR BID	03/11/15
A	FOR MASSDEP REVIEW	07/18/14

DESIGNED BY: DC | CHECKED BY: BCC
DRAWN BY: RPM | 224802-I-416.dwg

PLC-4 CONTROL PANEL
ANALOG OUTPUTS
MODIFICATIONS

LOWELL REGIONAL WATER UTILITY
LOWELL, MASSACHUSETTS

WATER SYSTEM IMPROVEMENTS

JOB NO.: 224802.20
DATE: MARCH 2015
SCALE: NTS
SHEET: 32 OF 47

I-416

\\we\shared\Projects\224802 Lowell MA Water System Improvement PEF 2011\wip\Drawings\Controls\224802-I-416.dwg, Mar 02, 2015 - 11:55am

BILL OF MATERIAL

ITEM	QTY.	MANUFACTURER	PART NUMBER	DESCRIPTION	DESIGNATION
1	1	HOFFMAN	A40P30	BACK PANEL, 37.00" x 29.00"	SUB PANEL
2	1	HOFFMAN	UU1008030	ENCLOSURE, NEMA 4X FIBERGLASS, 40.35" x 32.50" x 13.00"	ENCLOSURE
3					
4					
5					
6					
7					
8	1	ALLEN BRADLEY	1746-A10	SLC 500 PLC 13-SLOT I/O RACK	RACK 1
9	1	ALLEN BRADLEY	1747-L551	SLC 500 PLC PROCESSOR (CPU), 16K MEM.	RACK 1, SLOT 0
10	1	ALLEN BRADLEY	1746-P4	SLC 500 PLC POWER SUPPLY	PWS1
11	1	ALLEN BRADLEY	1746-NI8	ANALOG INPUT MODULE, 8 CH.	RACK 1, SLOT 6
12	2	ALLEN BRADLEY	1746-IA16	120VAC DIGITAL INPUT MODULE, 16 PT.	RACK 1, SLOTS 1 & 2
13	1	ALLEN BRADLEY	1746-OW16	RELAY OUTPUT MODULE, 16 PT.	RACK 1, SLOT 4
14	1	ALLEN BRADLEY	1746-NO8I	ANALOG OUTPUT MODULE, 8 CH.	RACK 1, SLOT 8
15					
16	110	ALLEN BRADLEY	1492-JD3	TERMINAL BLOCK 2 TIER	TB1, TB2, TB3
17	42	ALLEN BRADLEY	1492-EBJD3	TERMINAL BLOCK END BARRIER, 2 TIER	TB1, TB2, TB3
18	8	ALLEN BRADLEY	1492-EAJ35	TERMINAL BLOCK END ANCHOR	TB1, TB2, TB3
19	5	ALLEN BRADLEY	1492-CJJ5-10	TERMINAL BLOCK JUMPER, 10 POLE FOR 2 TIER	TB1, TB2
20	36	ALLEN BRADLEY	1492-JG3	TERMINAL BLOCK, GROUNDING	TB1, TB3
21	3	ALLEN BRADLEY	199-DR1	DIN RAIL, STANDARD	TB1, TB2, TB3
22					
23	13	ALLEN BRADLEY	1492-H4	FUSED TERMINAL BLOCK, NEON INDICATOR	FU1-FU13
24	3	ALLEN BRADLEY	1492-N37	FUSED TERMINAL BLOCK END BARRIER	FU1, 13, FU3201D
25	3	ALLEN BRADLEY	1492-N49	FUSE BLOCK SIDE JUMPERS 10 POLE	FU2-FU13, FU201A-D
26	3	ALLEN BRADLEY	1492-SJ5	SIDE JUMPERS INSULATING SLEEVE	FU2-FU13, FU201A-D
27	2	ALLEN BRADLEY	1492-M5X12	TERMINAL BLOCK BLANK MARKING TAGS, 1 TIER, 100 CT.	TB1, TB3
28	6	ALLEN BRADLEY	1492-M5X6	TERMINAL BLOCK BLANK MARKING TAGS, 2 TIER, 100 CT.	TB1, TB2, TB3
29	1	ALLEN BRADLEY	1492-SMBX12	FUSE BLOCK BLANK MARKING TAGS, 100 CT.	FU1-FU13, FU201A-D
30	4	ALLEN BRADLEY	1746-N2	I/O RACK BLANK SLOT FILLER.	RACK 1,SLOTS 3, 5, 7, 9
31	6FT	PANDUIT	G1.5X3LG6	WIRING DUCT, 1.5"W x 3"H	
32	6FT	PANDUIT	C1.5LG6	WIRING DUCT COVER, 1.5"W	
33	4	ALLEN BRADLEY	1492-H5	FUSED TERMINAL BLOCK, LED INDICATOR	FU201A-D
34					
35	1	ALLEN-BRADLEY	1489-A1C150	CIRCUIT BREAKER, 15 AMP, SINGLE POLE	CB1
36	1	SOLA	SDP2-24-100T	POWER SUPPLY, 120VAC IN, 24VDC, 2 AMPS OUT	PWS2
37	12FT	PANDUIT	G2X3LG6	WIRING DUCT, 2"W x 3"H	
38	12FT	PANDUIT	C2LG6	WIRING DUCT COVER, 2"W	
39	6FT	PANDUIT	G3X3LG6	WIRING DUCT, 3"W x 3"H	
40	6FT	PANDUIT	C3LG6	WIRING DUCT COVER, 3"W	
41	1	SQUARE D	PK12GTA	GROUND BAR	
42	1	PASS & SEYMOUR	26261-I	SINGLE RECEPTACLE, 15 AMP, IVORY	UPS POWER RECEPTACLE
43					
44	1	PASS & SEYMORE	1594-I	GFCI DUPLEX RECEPTACLE, 15 AMP, IVORY	PROGRAMMING RECEPTACLE
45					
46	1	RACO	809	4" BOX COVER	UPS POWER & PROG. RECEPT.
47	1	RACO	1002	LOCKNUT, 1/2"	UPS POWER & PROG. RECEPT.
48	1	RACO	1402	INSULATING BUSHING, 1/2"	UPS POWER & PROG. RECEPT.
49	1	RACO	1862	CHASE NIPPLE, 1/2"	UPS POWER & PROG. RECEPT.
50	1	RACO	232	4" SQUARE BOX	UPS POWER & PROG. RECEPT.
51					
52	15	BUSSMAN	AGC-1	FUSE, 1A, 250V, FAST ACTING	FU1, FU8-FU9, FU12
53	15	BUSSMAN	AGC-3	FUSE, 3A, 250V, FAST ACTING	FU2-FU5, FU10-FU11, FU13
54	10	BUSSMAN	AGC-1/2	FUSE, 1/2A, 250V, FAST ACTING	FU201A-D

ITEM	QTY.	MANUFACTURER	PART NUMBER	DESCRIPTION	DESIGNATION
55	1	APC	SMT750	BATTERY BACK-UP POWER SUPPLY, 750VA	UPS
56	2	PHOENIX CONTACT	2817738	VALVETRAB 120VAC SURGE PROTECTOR BASE UNIT	SUP1
57	4	PHOENIX CONTACT	2807586	VALVETRAB 120VAC SURGE PROTECTOR PLUG	SUP1 PLUS 2 SPARE
58	4	PHOENIX CONTACT	2838186	TERMITRAB ANALOG LOOP SURGE PROTECTOR	SUP2, SUP3 PLUS 2 SPARE
59	4	PHOENIX CONTACT	2838995	ANALOG LOOP SURGE PROTECTOR END COVER	SUP2, SUP3 PLUS 2 SPARE
60	1	PHOENIX CONTACT	1051003	ANALOG LOOP SURGE PROTECTOR MARKING STRIP	SUP2, SUP3
61	2	PANEL FABRICATOR		NAMEPLATE, PHENOLIC, ENGRAVED	SEE EQUIPMENT LAYOUT
62	4	ALLEN BRADLEY	1492-J4	TERMINAL BLOCK 1 TIER	TB1
63	2	ALLEN BRADLEY	1492-EBJ3	TERMINAL BLOCK END BARRIER, 1 TIER	TB1
64	1	ALLEN BRADLEY	1492-M6X12	TERMINAL BLOCK BLANK MARKING TAGS, 1 TIER, 120 CT.	TB1
65	2	ALLEN BRADLEY	1492-CJJ6-2	TERMINAL BLOCK JUMPER, 2 POLE FOR 1 TIER	TB1
66	1	ALLEN BRADLEY	1492-JG4	TERMINAL BLOCK, GROUNDING	TB1
67	1	GRAINGER	1FD91	#14,3 TYPE SJO POWER CORD, 8 FT.	SEE POWER DIST. DRAWING
68					
69					
70					
71	1	APC	AP9631	NETWORK CARD	FOR UPS STATUS
72	1	APC	AP9810	RELAY CONTACT ACCESSORY	FOR UPS STATUS
73	1	CINCH	DB25P	MALE 25-PIN D-SUBMINIATURE CONNECTOR	FOR UPS SMARTSLOT CONNECTIONS
74	1	CINCH	DB24659	25-PIN D-SUBMINIATURE CONNECTOR HOOD	FOR UPS SMARTSLOT CONNECTIONS
75	6FT	PANDUIT	SD3H6	WIREDUCT DIVIDER WALL	
76	1	PANDUIT	DB-C	DIVIDER WALL MOUNTING BASE, 100 CT.	
77					
78	1	TRIPP-LITE	SK8-6	8-OUTLET SURGE PROTECTED POWER STRIP	
79					
80	1	B&B ELECTRONICS	12DC1AST	ETHERNET SWITCH POWER PACK	
81	1	B&B ELECTRONICS	IASW5P	ETHERNET SWITCH, 10/100 Mbps, 5 COPPER PORTS	
82	1	BLACK BOX	EVNSL51-0006	CAT5E ETHERNET STANDARD PATCH CORD, 6 FT.	SEE COMMUNICATIONS
83	1	BLACK BOX	EVNSL51-0007	CAT5E ETHERNET STANDARD PATCH CORD, 10 FT.	SEE COMMUNICATIONS
84	1	GRACE ENGINEERING	P-Q17-M2RF5	COMMUNICATIONS INTERFACE PORT, NEMA 4X HOUSING	
85	1	RED LION	CUB4LP00	LOOP POWERED PROCESS METER, 3-1/2 DIGIT	
86					
87					
88					
89	27	ALLEN BRADLEY	700-HK36A1-4	RELAY SPDT, 120VAC COIL	PFR, CR0-23, PLUS 2 SPARE
90					
91					
92					
93	3	ALLEN BRADLEY	700-HK36Z24-4	RELAY SPDT, 24VDC COIL	CR-UPS1, CR-UPS2, PLUS 1 SPARE
94	1	ALLEN BRADLEY	700-N41	RELAY BLANK MARKING TAGS, 546 CT.	
95	30	ALLEN BRADLEY	700-HN121	RELAY SOCKET	
96					
97					
98	1	EMEDCO	QS3743	WARNING LABEL "ARC FLASH AND SHOCK HAZARD"	
99	1	EMEDCO	SQS110	WARNING LABEL "DEVICE POWERED FROM SEVERAL SOURCES"	
100					
101					
102					
103					
104					
105					
106					
107					
108					

GENERAL NOTES
1. THE ITEMS IN THE BILL OF MATERIAL TABLE ON THIS SHEET ARE EXISTING EXCEPT FOR ITEM 78.
2. CONTRACTOR TO REMOVE ITEMS 55, 71, 72, 73, 74 AND ADD ITEM 78.

ISSUE FOR BID

WOODARD & CURRAN
980 Washington Street, Suite 325N
Dedham, Massachusetts 02026
800.446.5518 | www.woodardcurran.com
COMMITMENT & INTEGRITY DRIVE RESULTS

THIS DOCUMENT IS THE PROPERTY OF WOODARD & CURRAN INC. AND ITS CLIENT. REPRODUCTION OR MODIFICATION WITHOUT WRITTEN PERMISSION IS PROHIBITED.

REV	DESCRIPTION	DATE
A	FOR MASSDEP REVIEW	07/18/14
B	ISSUE FOR BID	03/11/15

DESIGNED BY: DC CHECKED BY: BCC
DRAWN BY: RPM 224802-I-501.dwg

PLC-5 CONTROL PANEL
BILL OF MATERIAL
MODIFICATIONS

LOWELL REGIONAL WATER UTILITY
LOWELL, MASSACHUSETTS

WATER SYSTEM IMPROVEMENTS

JOB NO.: 224802.20
DATE: MARCH 2015
SCALE: NTS
SHEET: 33 OF 47

I-501

\\wc\shared\Projects\224802 Lowell MA - Water System Improvement PEF 2011\vis\Drawings\Controls\224802-I-501.dwg, Mar 03, 2015 - 1:55pm

NAMEPLATE SCHEDULE			
ITEM	DIMENSION	DESCRIPTION	FABRICATION COMMENTS
A	4" x .75"	SINGLE OUTLET FOR UPS CONNECTION ONLY GFCI OUTLET FOR PROGRAMMING ONLY	NAMEPLATE TO BE RED WITH WHITE LETTERS WITH ADHESIVE BACK. TEXT SIZE TO BE .12
B	5" x 1"	PLC-5	NAMEPLATE TO BE BLACK WITH WHITE LETTERS WITH ADHESIVE BACK. TEXT SIZE TO BE .375

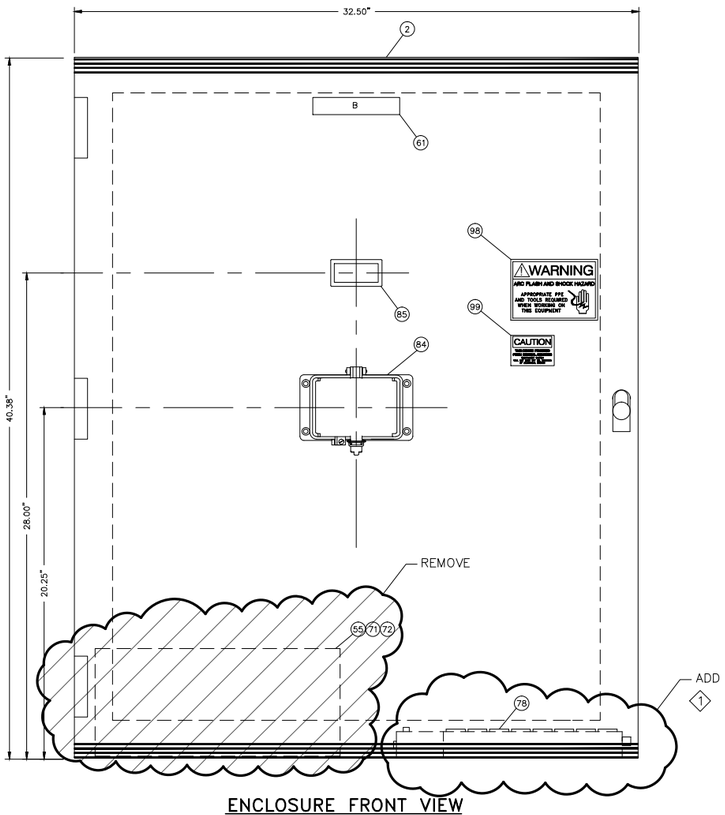

ENCLOSURE FRONT VIEW

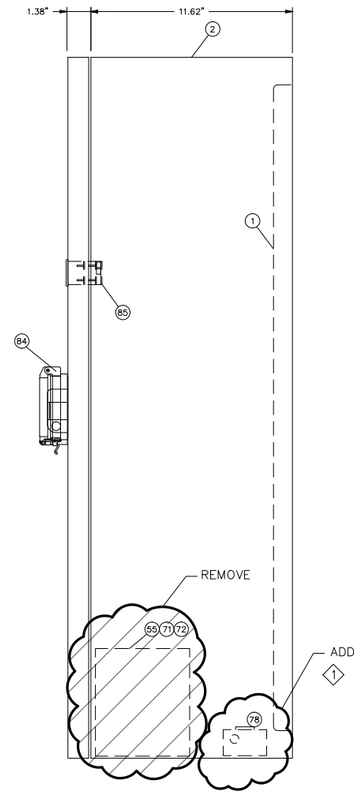

ENCLOSURE RIGHT SIDE VIEW

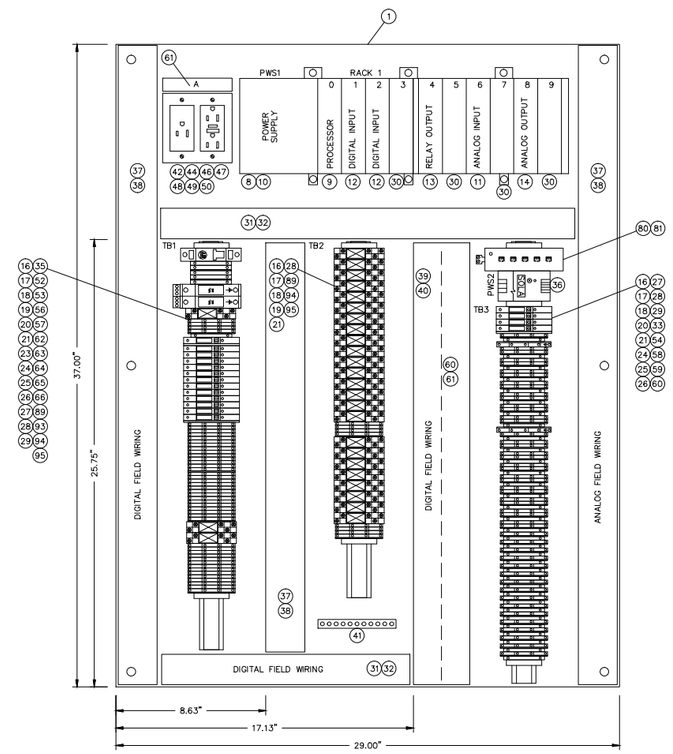

SUB PANEL

INSTALLING CONTRACTOR NOTES:

1) THE INSTALLING CONTRACTOR SHALL INSTALL ENCLOSURE SO BOTTOM IS ABOVE HEIGHT OF CHEMICAL CONTAINMENT WALL.

2) ALL CONDUITS SHALL ENTER FROM THE TOP OF ENCLOSURE.

GENERAL NOTES:
1. REMOVE ITEMS 55, 71 & 72 FROM PANEL AND DISPOSE OF PROPERLY.

1 KEYED NOTES:
FURNISH AND INSTALL ITEM 78 IN PANEL (WIRING DETAIL ON DRAWING I-504).

ISSUE FOR BID

960 Washington Street, Suite 325N
Dedham, Massachusetts 02026
800.446.5518 | www.woodardcurran.com
WOODARD & CURRAN
COMMITMENT & INTEGRITY DRIVE RESULTS

THIS DOCUMENT IS THE PROPERTY OF WOODARD & CURRAN INC. AND ITS CLIENT. REPRODUCTION OR MODIFICATION WITHOUT WRITTEN PERMISSION IS PROHIBITED.

REV	DESCRIPTION	DATE
A	FOR MASSDEP REVIEW	07/18/14
B	ISSUE FOR BID	03/11/15

DESIGNED BY: DC CHECKED BY: BCC
DRAWN BY: RPM 224802-I-502.dwg

PLC-5 CONTROL PANEL EQUIPMENT LAYOUT MODIFICATIONS

LOWELL REGIONAL WATER UTILITY
LOWELL, MASSACHUSETTS

WATER SYSTEM IMPROVEMENTS

JOB NO.: 224802.20
DATE: MARCH 2015
SCALE: NTS
SHEET: 34 OF 47

I-502

\\wc\shared\Projects\224802 Lowell MA - Water System Improvement PEF 2011\wip\Drawings\Controls\224802-I-502.dwg, Mar 03, 2015 - 1:55pm

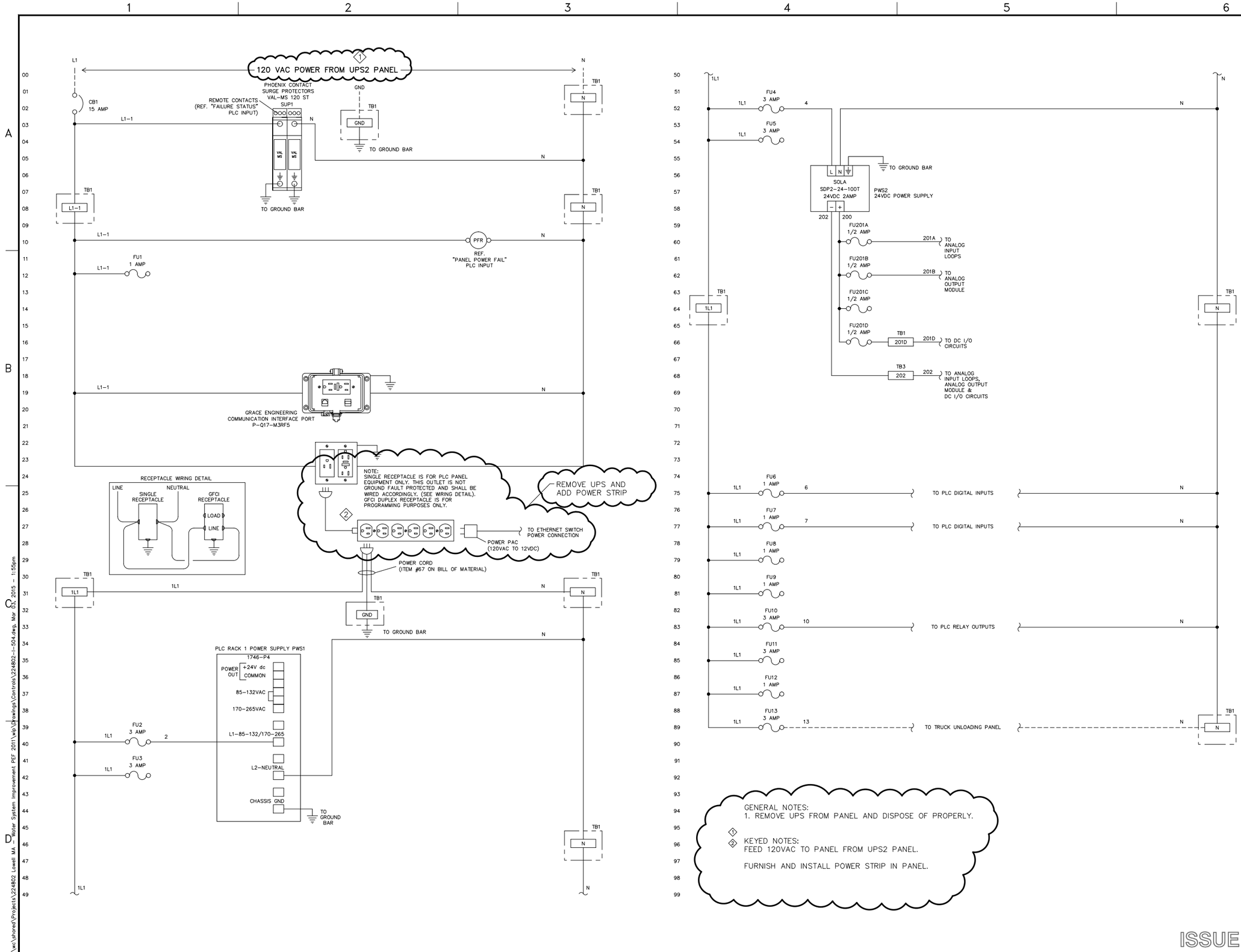

GENERAL NOTES:
1. REMOVE UPS FROM PANEL AND DISPOSE OF PROPERLY.

KEYED NOTES:
1 FEED 120VAC TO PANEL FROM UPS2 PANEL.

2 FURNISH AND INSTALL POWER STRIP IN PANEL.

ISSUE FOR BID

WOODARD & CURRAN
960 Washington Street, Suite 325N
Dedham, Massachusetts 02026
800.446.5518 | www.woodardcurran.com
COMMITMENT & INTEGRITY DRIVE RESULTS

THIS DOCUMENT IS THE PROPERTY OF WOODARD & CURRAN INC. AND ITS CLIENT. REPRODUCTION OR MODIFICATION WITHOUT WRITTEN PERMISSION IS PROHIBITED.

REV	DESCRIPTION	DATE
A	FOR MASSDEP REVIEW	07/18/14
B	ISSUE FOR BID	03/11/15

DESIGNED BY: DC
CHECKED BY: BCC
DRAWN BY: RPM
224802-I-504.dwg

PLC-5 CONTROL PANEL POWER DISTRIBUTION MODIFICATIONS

LOWELL REGIONAL WATER UTILITY
LOWELL, MASSACHUSETTS

WATER SYSTEM IMPROVEMENTS

JOB NO.: 224802.20
DATE: MARCH 2015
SCALE: NTS
SHEET: 35 OF 47

I-504

\\we\shared\Projects\224802 Lowell MA Water System Improvement PEF 2011\wip\Drawings\Controls\224802-I-504.dwg, Mar 02, 2015 - 1:55pm

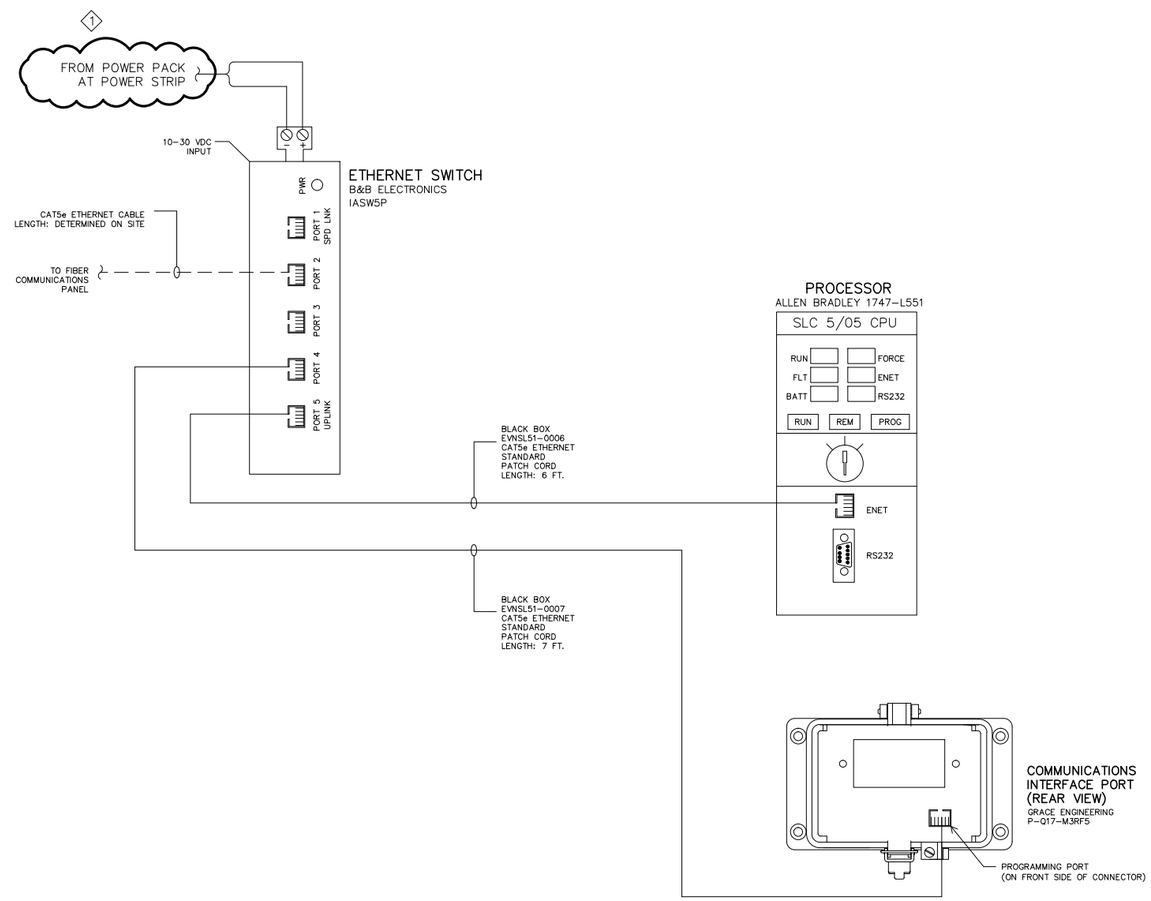

PORT DETAIL

SLC 5/05 PORT CONFIGURATION			
CHANNEL 0		CHANNEL 1	
PRIMARY PROTOCOL:	DF1 FULL DUPLEX	PRIMARY PROTOCOL:	ETHERNET
BAUD:	19200	IP ADDRESS:	XXX.XXX.XXX.XX
CONTROL LINE:	NO HANDSHAKING (485 NETWORK)	SUBNET:	255.255.255.0
PARITY:	NONE	GATEWAY:	0.0.0.0
STOP BIT:	1	BOOTP ENABLE	UNCHECKED
		DHCP ENABLE	UNCHECKED
		PORT SETTING:	10/100 Mbps FULL DUPLEX/HALF DUPLEX

KEYED NOTES:
1. FEED POWER TO ETHERNET SWITCH FROM POWER STRIP.

ISSUE FOR BID

WOODARD & CURRAN
960 Washington Street, Suite 325N
Dedham, Massachusetts 02026
800.446.5518 | www.woodardcurran.com
COMMITMENT & INTEGRITY DRIVE RESULTS

THIS DOCUMENT IS THE PROPERTY OF WOODARD & CURRAN INC. AND ITS CLIENT. REPRODUCTION OR MODIFICATION WITHOUT WRITTEN PERMISSION IS PROHIBITED.

REV	DESCRIPTION	DATE
B	ISSUE FOR BID	03/11/15
A	FOR MASSDEP REVIEW	07/18/14

DESIGNED BY: DC
DRAWN BY: RPM
CHECKED BY: BCC
224802-I-505.dwg

PLC-5 CONTROL PANEL COMMUNICATIONS MODIFICATIONS

LOWELL REGIONAL WATER UTILITY
LOWELL, MASSACHUSETTS

WATER SYSTEM IMPROVEMENTS

JOB NO.: 224802.20
DATE: MARCH 2015
SCALE: NTS
SHEET: 36 OF 47

I-505

\\wc\shared\Projects\224802 Lowell MA - Water System Improvement PEF 2011\wip\Drawings\Controls\224802-I-505.dwg, Mar 03, 2015 - 1:56pm

ELECTRICAL SYMBOLS

	LIMIT SWITCH NORMALLY CLOSED
	LIMIT SWITCH HELD CLOSED
	LIMIT SWITCH NORMALLY OPEN
	LIMIT SWITCH HELD OPEN
	FLOAT SWITCH NORMALLY OPEN
	PRESSURE SWITCH NORMALLY OPEN
	TEMPERATURE SWITCH NORMALLY OPEN
	TIME SWITCH (DROP OUT) NORMALLY OPEN
	TIME SWITCH (PULL IN) NORMALLY OPEN
	FLOW SWITCH NORMALLY OPEN
	PUSH BUTTON NORMALLY CLOSED
	PUSH BUTTON NORMALLY OPEN
OFF ON 0X	SELECTOR SWITCH 2 POSITION
H A X00 0X0 00X	SELECTOR SWITCH 3 POSITION
H A X000 0X00 00X0 000X	SELECTOR SWITCH 4 POSITION
	CONTACT NORMALLY CLOSED
	CONTACT NORMALLY OPEN
	SWITCH
R	PILOT LIGHT (W/ LENS COLOR)
	SOLENOID
	COIL
	HORN
	CIRCUIT BREAKER
	FUSE
	CHASSIS GROUND
	THERMAL OVERLOAD
	120 VAC RECEPTACLE
	TRANSFORMER

	TRANSFORMER
	CURRENT TRANSFORMER
	THERMOCOUPLE
	RTD SENSOR
	MOTOR
	MUSHROOM PUSH BUTTON NORMALLY OPEN
#	REVISION REFERENCE
#	ITEM REFERENCE
#	NOTE REFERENCE
#####	TERMINAL NUMBER
	BREAK
	PANEL WIRING
	FIELD WIRING
	SHIELDED CABLE
	WIRES CROSSING
	WIRES CONNECTING
	3 PHASE HEATER (DELTA)
	3 PHASE HEATER (WYE)
	3-POLE CIRCUIT BREAKER
	MOTOR PROTECTOR
	3-POLE CONTACTOR
	3-POLE DISCONNECT

PANEL NOTES

1) THE MAIN CONTROL PANEL MUST HAVE A POCKET INSIDE THE PANEL LARGE ENOUGH TO STORE A COMPLETE SET OF SYSTEM DIAGRAMS, AND DRAWINGS.

2) ANALOG CABLES SHALL BE 2 CONDUCTOR WITH SHIELD. BELDEN #8760 OR EQUAL.

3) LEAVE FREE SPACE ABOVE PLC FOR VENTILATION.

4) ALL WIRES SHALL BE IDENTIFIED AS SPECIFIED BY THE NATIONAL ELECTRICAL CODE HANDBOOK AND THE FOLLOWING:

POWER DISTRIBUTION WIRES.....BLACK
NEUTRAL WIRES.....WHITE
AC CONTROL CIRCUIT WIRES.....RED
DC CONTROL CIRCUIT WIRES.....BLUE
DC COMMON WIRES.....WHITE W/BLUE STRIPE
GROUND WIRES.....GREEN W/YELLOW STRIPE
WIRES THAT MAY REMAIN.....ORANGE
ENERGIZED WHEN THE MAIN
DISCONNECT IS IN THE OFF
POSITION

5) ALL WIRE SHALL BE SIZED IN ACCORDANCE WITH NEC CODES. SINGLE CONDUCTORS SHALL BE STRANDED COPPER WITH THWN INSULATION, RATED FOR 600 VAC, AND UL LISTED AS MTW, UNLESS NOTED OTHERWISE. MINIMUM CONDUCTOR SIZE SHALL BE #14AWG. #16 AWG MAY BE USED ONLY FOR THE INDIVIDUAL WIRES CONNECTING DIRECTLY TO AN I/O TERMINAL ON THE PLC SWING ARM. THE HOT AND NEUTRAL CONDUCTOR SUPPLYING EACH SWING ARM SHALL REMAIN #14 AWG. GROUND CONDUCTOR SIZE SHALL BE AS INDICATED ON THE DRAWINGS. WHERE NOT INDICATED, THEY SHALL BE #14 AWG OR LARGER.

6) ALL PLC CHASSIS, PANEL DOORS, SIDE PANELS, BACK PANELS AND GROUND BUS SHALL BE BONDED TOGETHER WITH WIRES SIZED AS SHOWN ON THE DRAWING.

7) ALL WIRES SHALL BE TAGGED AT EVERY TERMINATION POINT. SHORT WIRE LENGTHS, (LESS THAN 8") WHERE THE ENTIRE CONDUCTOR IS VISIBLE MAY BE TAGGED AT JUST ONE END. WIRE LABELS FOR WIRES SMALLER THAN NO. 4. SHALL BE VINYL, SELF ADHESIVE, WRAPAROUND, WITH MACHINE PRINTED NUMBERS AND LETTERS. WIRE SIZES NO. 4 AND LARGER AND MULTI CONDUCTOR CABLES SHALL BE MARKED WITH ONE-PIECE, NYLON LOCKING MACHINE PRINTED MARKER TIES EQUAL TO PANDUIT PLM SERIES. WIRE TAG NUMBER SHALL BE AS INDICATED ON THE DRAWINGS

8) DO NOT ROUTE ANY COMMUNICATION CABLES IN WIREWAYS WITH 120 VAC WIRING. ROUTE ALL THESE CABLES AWAY FROM 120 VAC WIRING. WHERE 120 VAC CONDUCTORS MUST BE CROSSED, DO SO AT RIGHT ANGLES AND PROVIDE AT LEAST 1" SEPARATION.

9) NO MORE THAN TWO WIRES SHALL BE CONNECTED TO ANY ONE TERMINAL. TERMINAL BLOCKS SHALL HAVE A SAFETY COVER OR BE FINGER SAFE TO PROTECT PERSONNEL FROM SHOCK. ALL TERMINAL BLOCKS SHALL BE MOUNTED ON DIN RAILS. MISCELLANEOUS SEPARATORS, TOP JUMPER BARS, SIDE JUMPER BARS, MACHINE PRINTED TERMINAL BLOCK TAGS, FASTENERS, BRACKETS FOR RAISING 35MM RAIL, ETC. SUPPLY ALL HARDWARE NEEDED TO PROVIDE A COMPLETE TERMINAL STRIP ASSEMBLY.

10) ALL TERMINAL STRIPS SET BETWEEN WIREWAYS SHALL BE RAISED TO FACILITATE WIRING. INSTALL END BARRIERS FOR EACH STYLE OF TERMINAL. INSTALL END STOPS ON EACH SECTION OF TERMINALS OR RELAYS. USE MACHINE PRINTED TAGS TO MARK TERMINAL STRIPS. WHEREVER POSSIBLE, MAKE ALL TERMINAL BLOCK CONNECTIONS FOR THE PANEL WIRING ON THE TOP OR RIGHT SIDE OF THE TERMINAL STRIP AND LEAVE THE BOTTOM OR LEFT SIDE FREE FOR FIELD TERMINATIONS, UNLESS NOTED OTHERWISE.

11) PLASTIC NAMEPLATES SHALL BE ENGRAVED TYPE. EITHER PAINT FILLED ENGRAVINGS OR 2 COLOR LAMINATIONS ARE ACCEPTABLE.

12) ALL OPERATOR CONTROL DEVICES (BUTTONS, SWITCHES, METERS, DISPLAYS, ETC.) SHALL HAVE NAMEPLATES.

13) PANEL BUILDER SHALL PROVIDE ENGINEER WITH A SET OF MARK UP DRAWINGS. THESE SHALL BE COMPLETE, ALLOWING ENGINEER TO PRODUCE A SET OF "AS BUILT" DRAWINGS SHOWING ALL WIRE NUMBERS WITHIN THE PANEL AND THE DEVICE TERMINAL NUMBERS TO WHICH THEY CONNECT. REQUIRED INFORMATION SHALL INCLUDE BUT NOT BE LIMITED TO:
   A. ALL WIRE TAG NUMBERS.
   B. TERMINAL CONNECTION POINTS FOR POWER AND NEUTRAL FEEDS.
   C. ANY DEVIATIONS FROM THE EQUIPMENT LOCATIONS SHOWN ON THE DRAWINGS. PRIOR APPROVAL SHOULD BE OBTAINED BEFORE MAKING SUCH CHANGES.

14) PANEL BUILDER SHALL SAVE ALL MATERIAL DATA SHEETS AND LITERATURE. WHERE PRODUCT DATA IS PROVIDED ON THE PACKAGE, MAKE A CLEAR COPY OF THE DATA AND INCLUDE WITH OTHER DATA SHEETS. ALL OF THIS MATERIAL SHALL BE RETURNED DIRECTLY TO ENGINEER UPON DELIVERY OF THE PANEL.

15) EQUIPMENT LOCATIONS SHALL BE AS SHOWN ON THE DRAWINGS. THE PANEL BUILDER SHALL NOTIFY ENGINEER OF ANY PHYSICAL CONFLICTS OR OTHER PROBLEMS THAT COULD CAUSE PROBLEMS WITH THE INSTALLATION OR OPERATION OF THE PANEL BEFORE ASSEMBLING THE PANEL. RESOLUTION OF SUCH CONFLICTS SHALL BE APPROVED BY ENGINEER PRIOR TO PANEL ASSEMBLY.

16) ALL EQUIPMENT SHALL BE PROVIDED AS SHOWN ON THE BILL OF MATERIALS INCLUDED IN THIS DRAWING PACKAGE. ANY DEVIATION FROM THE BILL OF MATERIALS MUST BE SUBMITTED FOR APPROVAL IN WRITING TO THE ENGINEER PRIOR TO FABRICATION.

CROSS REFERENCING ON WIRING SCHEMATICS SHALL BE FOUR DIGITS ENCLOSED WITH BRACKETS AS SHOWN.

[0733]

FIRST TWO DIGITS INDICATE SHEET NUMBER — SECOND TWO DIGITS INDICATE LINE NUMBER

FIELD NOTES

1) CARE SHALL BE TAKEN WHILE CONDUIT ENTRY PENETRATIONS ARE MADE INTO ENCLOSURE TO AVOID SCATTERING OF DRILL CHIPS & KNOCK-OUT SLUGS. PENETRATIONS SHALL BE DE-BURRED AND DEBRIS REMOVED. ALL CONDUIT ENTRIES INTO ENCLOSURE SHALL BE SEALED FROM LIQUIDS & CONTAMINANTS. ENTRIES OVER CRITICAL COMPONENTS, SUCH AS PLCs AND DRIVES SHALL BE AVOIDED.

2) ANALOG CABLES SHALL BE 2 CONDUCTOR WITH SHIELD. BELDEN #8760 OR EQUAL.

3) ALL WIRES SHALL BE IDENTIFIED AS SPECIFIED BY THE NATIONAL ELECTRICAL CODE HANDBOOK AND THE FOLLOWING:

460 VAC	120/208 VAC
(L1).....BROWN (L2).....ORANGE (L3).....YELLOW (NEUT)....GREY	(L1).....BLACK (L2).....RED (L3).....BLUE (NEUT)....WHITE
24 VDC	**INTRINSICALLY SAFE**
(ALL).....BLUE	(ALL).....LIGHT BLUE

4) ALL WIRE SHALL BE SIZED IN ACCORDANCE WITH NEC CODES. SINGLE CONDUCTORS SHALL BE STRANDED COPPER WITH THWN INSULATION, RATED FOR 600 VAC, AND UL LISTED AS MTW, UNLESS NOTED OTHERWISE. MINIMUM CONDUCTOR SIZE SHALL BE #14 AWG. GROUND CONDUCTOR SIZE SHALL BE AS INDICATED ON THE DRAWINGS. WHERE NOT INDICATED, IT SHALL BE #14 AWG OR LARGER.

5) CONDUIT ENTRIES INTO ENCLOSURES SHALL BE LOCATED WITH CARE TO ASSURE ADEQUATE WIRE BENDING SPACE. WIRING SHALL BE ROUTED SO THAT DOOR MOUNTED EQUIPMENT WILL NOT INTERFERE WITH IT WHEN THE DOOR IS CLOSED.

6) INTRINSICALLY SAFE WIRING CONDUIT ENTRIES INTO ENCLOSURE SHALL BE LOCATED AS CLOSE AS POSSIBLE TO THE WIREWAY PROVIDED FOR INTRINSICALLY SAFE FIELD WIRING SO THAT ALL INTRINSIC WIRING IS ISOLATED (AT LEASED 2") FROM ALL OTHER FIELD AND PANEL WIRING AND SECURED. INTRINSICALLY SAFE FIELD WIRING SHALL BE ROUTED THROUGH THE WIREWAY PROVIDED EXCLUSIVELY FOR INTRINSICALLY SAFE WIRING. ALL WIRING SHALL BE IN COMPLIANCE WITH THE NATIONAL ELECTRICAL CODE ARTICLE 504. OTHER APPLICABLE ARTICLES INCLUDE 501 & 515.

7) ENGINEER HAS IDENTIFIED AS MANY OF THE PLC INPUTS AND OUTPUTS AS POSSIBLE THAT WILL BE NEEDED TO MAKE THE CONTROL PROGRAM OPERATE AS REQUIRED. ADDITIONAL I/O MAY BE IDENTIFIED WHEN THE CONTROL PROGRAM IS WRITTEN AND REQUIRE WIRING. THESE SHALL BE CONSIDERED PART OF THESE SHOP DRAWINGS. THE INSTALLING CONTRACTOR SHALL INSTALL 10% SPARE CONDUCTORS TERMINATED ON TERMINAL BLOCKS ON BOTH ENDS TO MEET ADDITIONAL I/O REQUIREMENTS.

8) ALL WIRES SHALL BE TAGGED AT EVERY TERMINATION POINT. SHORT WIRE LENGTHS, (LESS THAN 8") WHERE THE ENTIRE CONDUCTOR IS VISIBLE MAY BE TAGGED AT JUST ONE END. WIRE LABELS FOR WIRES SMALLER THAN NO. 4. SHALL BE VINYL, SELF ADHESIVE, WRAPAROUND, WITH MACHINE PRINTED NUMBERS AND LETTERS. WIRE SIZES NO. 4 AND LARGER AND MULTI CONDUCTOR CABLES SHALL BE MARKED WITH ONE-PIECE, NYLON LOCKING MACHINE PRINTED MARKER TIES EQUAL TO PANDUIT PLM SERIES. WIRE TAG NUMBER SHALL BE AS INDICATED ON THE DRAWINGS.

9) DO NOT ROUTE ANY COMMUNICATION CABLES IN WIREWAYS WITH 120 VAC WIRING. ROUTE ALL THESE CABLES AWAY FROM 120 VAC WIRING. WHERE 120 VAC CONDUCTORS MUST BE CROSSED, DO SO AT RIGHT ANGLES AND PROVIDE AT LEAST 1" SEPARATION.

10) NO MORE THAN TWO WIRES SHALL BE CONNECTED TO ANY ONE TERMINAL.

NOTE: ALL WORK ON SHEETS I-601 THROUGH I-609 IS NEW.

ISSUE FOR BID

980 Washington Street, Suite 325N
Dedham, Massachusetts 02026
800.446.5518 | www.woodardcurran.com
WOODARD & CURRAN
COMMITMENT & INTEGRITY DRIVE RESULTS

THIS DOCUMENT IS THE PROPERTY OF WOODARD & CURRAN INC. AND ITS CLIENT. REPRODUCTION OR MODIFICATION WITHOUT WRITTEN PERMISSION IS PROHIBITED.

REV	DESCRIPTION	DATE
B	ISSUE FOR BID	03/11/15
A	FOR MASSDEP REVIEW	07/18/14

DESIGNED BY: DC CHECKED BY: BCC
DRAWN BY: RPM 224802-I601.DWG

STACKPOLE STREET BOOSTER STATION
PLC-20 CONTROL PANEL
LEGEND & NOTES

LOWELL REGIONAL WATER UTILITY
LOWELL, MASSACHUSETTS

WATER SYSTEM IMPROVEMENTS

JOB NO.: 224802.20
DATE: MARCH 2015
SCALE: NTS
SHEET: 37 OF 47

I-601

\\we\shared\Projects\224802 Lowell MA - Water System Improvement PEF 2011\wip\Drawings\Controls\STACKPOLE ST BOOSTER STATION\224802-I601.DWG, Mar 03, 2015 - 1:56pm

BILL OF MATERIAL

NAMEPLATE SCHEDULE

ITEM	DIMENSION	DESCRIPTION	FABRICATION COMMENTS
A	6.50" x 1"	SCADA PANEL	NAMEPLATE TO BE BLACK WITH WHITE LETTERS WITH ADHESIVE BACK. TEXT SIZE TO BE .375. QUANTITY: 1
B	4" x .75"	SINGLE OUTLET FOR UPS CONNECTION ONLY GFCI OUTLET FOR PROGRAMMING ONLY	NAMEPLATE TO BE RED WITH WHITE LETTERS WITH ADHESIVE BACK. TEXT SIZE TO BE .12. QUANTITY: 1

ITEM	QTY	MANUFACTURER	PART NUMBER	DESCRIPTION	DESIGNATION
1	1	ALLEN BRADLEY	1766-L32AWAA	MICROLOGIX 1400 PLC, 120VAC	PLC/PS1
2	1	ALLEN BRADLEY	1766-MM1	MICROLOGIX 1400 PLC MEMORY MODULE	RACK 1
3	1	ALLEN BRADLEY	1762-IA8	120 VAC DIGITAL INPUT MODULE, 8PT.	PLC SLOT 1
4	1	ALLEN BRADLEY	1762-IF4	ANALOG INPUT MODULE, 4PT.	PLC SLOT 2
5	1	ALLEN BRADLEY	1762-OF4	ANALOG OUTPUT MODULE, 4PT.	PLC SLOT 3
6	1	ALLEN BRADLEY	1489-A1C150	CIRCUIT BREAKER, 15 AMP, 1 POLE	CB1
7	1	HOFFMAN	A363612LP	NEMA 12 ENCLOSURE, 36"x36"x12"	
8	1	HOFFMAN	A36P36	BACKPANEL 33"x33"	
9	3	ALLEN BRADLEY	199-DR1	STANDARD DIN RAIL	TB1, TB2, TB3
10	1	APC	BR1000G	UNINTERRUPTIBLE POWER SYSTEM 1000 VA, 600W	UPS
11	3	BUSS	GMA-1-R	FUSE, 1 AMP, 250V	FU4, FU5, FU7
12	5	BUSS	GMA-3.15-R	FUSE, 3.15 AMP, 125V	FU1, FU2, FU3, FU6, FU8
13	4	BUSS	GMA-250-R	FUSE, 1/4 AMP, 250V	FU301A, FU301B, FU301D, FU301E
14	166	ENTRELEC	115116.07	TERMINAL BLOCK	TB1, TB2, TB3
15	4	ENTRELEC	118368.16	TERMINAL BLOCK END BARRIER	TB1, TB2, TB3
16	11	ENTRELEC	103002.26	TERMINAL BLOCK END ANCHOR	PLC, TB1, TB2, TB3
17	2	ENTRELEC	233000.01	BLANK TERMINAL MARKERS, 100CT.	TB1, TB2, TB3
18	3	ENTRELEC	168973.07	TERMINAL JUMPER BAR, 10 POLE	TB1, TB2, TB3
19	13	ENTRELEC	115657.25	FUSE BLOCK	FU1 thru FU8, FU301A thru FU301E
20	2	ENTRELEC	116951.15	FUSE BLOCK END BARRIER	FU8, FU301E
21	1	ALLEN BRADLEY	700-SKON2Z25	SOLID STATE RELAY	SSR1
22	9	ALLEN BRADLEY	700-HK36A1	RELAY, 1 POLE, 120VAC	PFR, CR1-CR8
23	10	ALLEN BRADLEY	700-HN121	RELAY SOCKET	PFR, CR1-CR8, SSR1
24	12 FT	PANDUIT	G1.5X3LG6	1.5" x 3" WIREDUCT	
25	12 FT	PANDUIT	C1.5LG6	1.5" WIREDUCT COVER	
26	12 FT	PANDUIT	G2X3LG6	2" x 3" WIREDUCT	
27	12 FT	PANDUIT	C2LG6	2" WIREDUCT COVER	
28	2	ENTRELEC	173523.11	FUSE BLOCK JUMPER BAR, 10 POLE	FU1 thru FU8, FU301A thru FU301E
29	XX	ENTRELEC	165113.16	GROUNDING TERMINAL BLOCK	TB1, TB3
30	1	BUSS	GMA-2.5-R	FUSE, 2 1/2 AMP, 250V	FU301C
31	2	SOLA	SDP2-24-100T	POWER SUPPLY, 24 VDC, 2 AMP	PS2, PS3
32	1	TRANSTECTOR	1100-855	ACP100BW3R 120VAC SURGE SUPPRESSOR WITH RELAY	
33	1	TELEDESIGN	TS4000-05B45SBB	LICENSED RADIO MODEM	
34	1	ALLEN BRADLEY	1761-CBL-PM02	COMMUNICATIONS CABLE	
35	1	M2CABLES	M231D1-28100	NULL MODEM ADAPTER	
36	1	MOXA	EDS-205	ETHERNET SWITCH	
37	1	BLACK BOX	EVNSL641-0003	CAT6 ETHERNET CABLE, 3 FT.	
38	1	BLACK BOX	EVNSL641-0007	CAT6 ETHERNET CABLE, 7 FT.	
39	1	AUTOMATION DIRECT	EA7-S6M	C-MORE OPERATOR INTERFACE, 6" TOUCH PANEL, 24VDC	OIT
40					
41					
42	2	PANEL FABRICATOR		NAMEPLATE, PHENOLIC, ENGRAVED	SEE NAMEPLATE SCHEDULE
43	1	GRAINGER	1FD91	#14,3 TYPE SJO POWER CORD	SEE POWER DISTRIBUTION DRAWING
44	1	RACO	226	4" SQUARE BOX	UPS POWER & PROG. RECEPTACLE
45	1	RACO	809	4" BOX COVER	UPS POWER & PROG. RECEPTACLE
46	1	RACO	1662	CHASE NIPPLE, 1/2"	UPS POWER & PROG. RECEPTACLE
47	1	RACO	1002	LOCKNUT, 1/2"	UPS POWER & PROG. RECEPTACLE
48	1	RACO	1402	INSULATING BUSHING, 1/2"	UPS POWER & PROG. RECEPTACLE
49	1	PASS & SEYMORE	26261-I	SINGLE RECEPTACLE, 15 AMP	UPS POWER RECEPTACLE
50	1	PASS & SEYMORE	1594-I	GFCI DUPLEX RECEPTACLE, 15 AMP	PROGRAMMING RECEPTACLE
51	1	EMEDCO	QS3743	WARNING LABEL "ARC FLASH AND SHOCK HAZARD"	
52	1	EMEDCO	SQS110	WARNING LABEL "DEVICE POWERED FROM SEVERAL SOURCES"	
53	1	PANDUIT	UGB2/O-414-6	GROUND BAR	
54	1	MACROMATIC	PMPU	3-PHASE MONITOR	
55	1	MACROMATIC	70175	3-PHASE MONITOR RELAY SOCKET	
56					
57					
58					
59					
60					

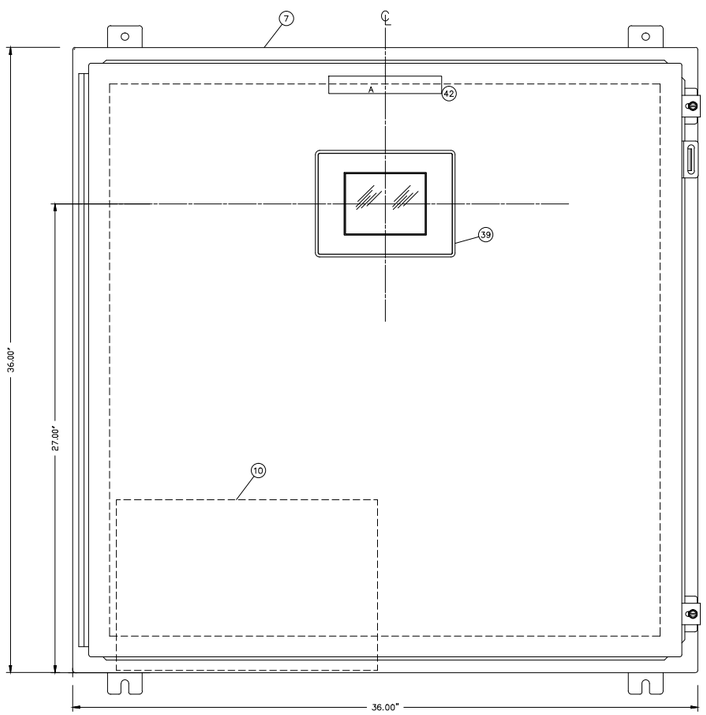

ENCLOSURE FRONT VIEW

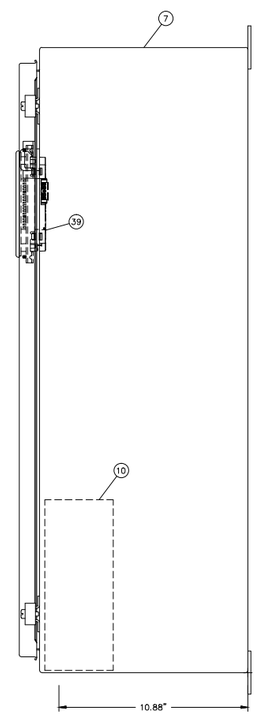

ENCLOSURE RIGHT SIDE VIEW

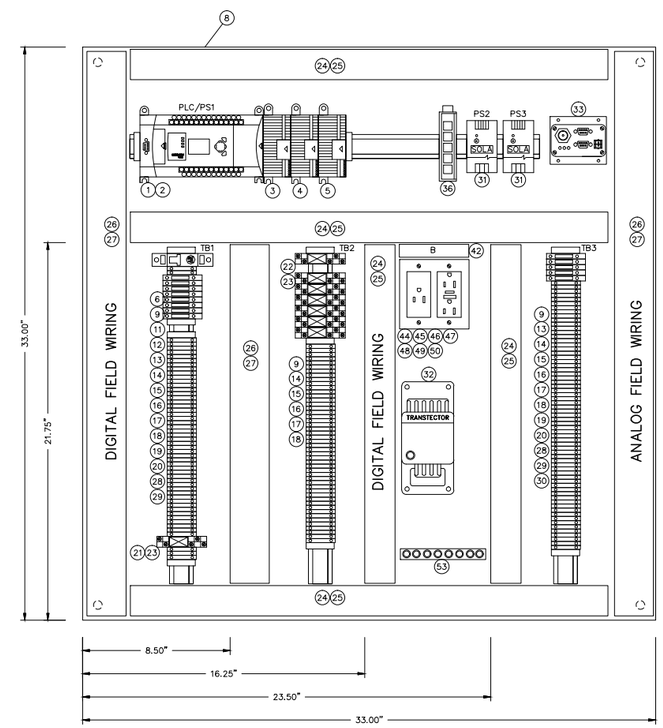

SUB-PANEL

ISSUE FOR BID

980 Washington Street, Suite 325N
Dedham, Massachusetts 02026
800.446.5518 | www.woodardcurran.com
WOODARD & CURRAN
COMMITMENT & INTEGRITY DRIVE RESULTS

THIS DOCUMENT IS THE PROPERTY OF WOODARD & CURRAN INC. AND ITS CLIENT. REPRODUCTION OR MODIFICATION WITHOUT WRITTEN PERMISSION IS PROHIBITED.

REV	DESCRIPTION	DATE
B	ISSUE FOR BID	03/11/15
A	FOR MASSDEP REVIEW	07/18/14

DESIGNED BY: DC CHECKED BY: BCC
DRAWN BY: RPM 224802-I602.DWG

STACKPOLE STREET BOOSTER STATION
PLC-20 CONTROL PANEL
EQUIPMENT LAYOUT

LOWELL REGIONAL WATER UTILITY
LOWELL, MASSACHUSETTS

WATER SYSTEM IMPROVEMENTS

JOB NO.: 224802.20
DATE: MARCH 2015
SCALE: NTS
SHEET: 38 OF 47

I-602

\\wc\shared\Projects\224802 Lowell MA - Water System Improvement PEF 2011\wip\Drawings\Controls\STACKPOLE ST BOOSTER STATION\224802-I602.DWG, Mar 03, 2015 - 1:56pm

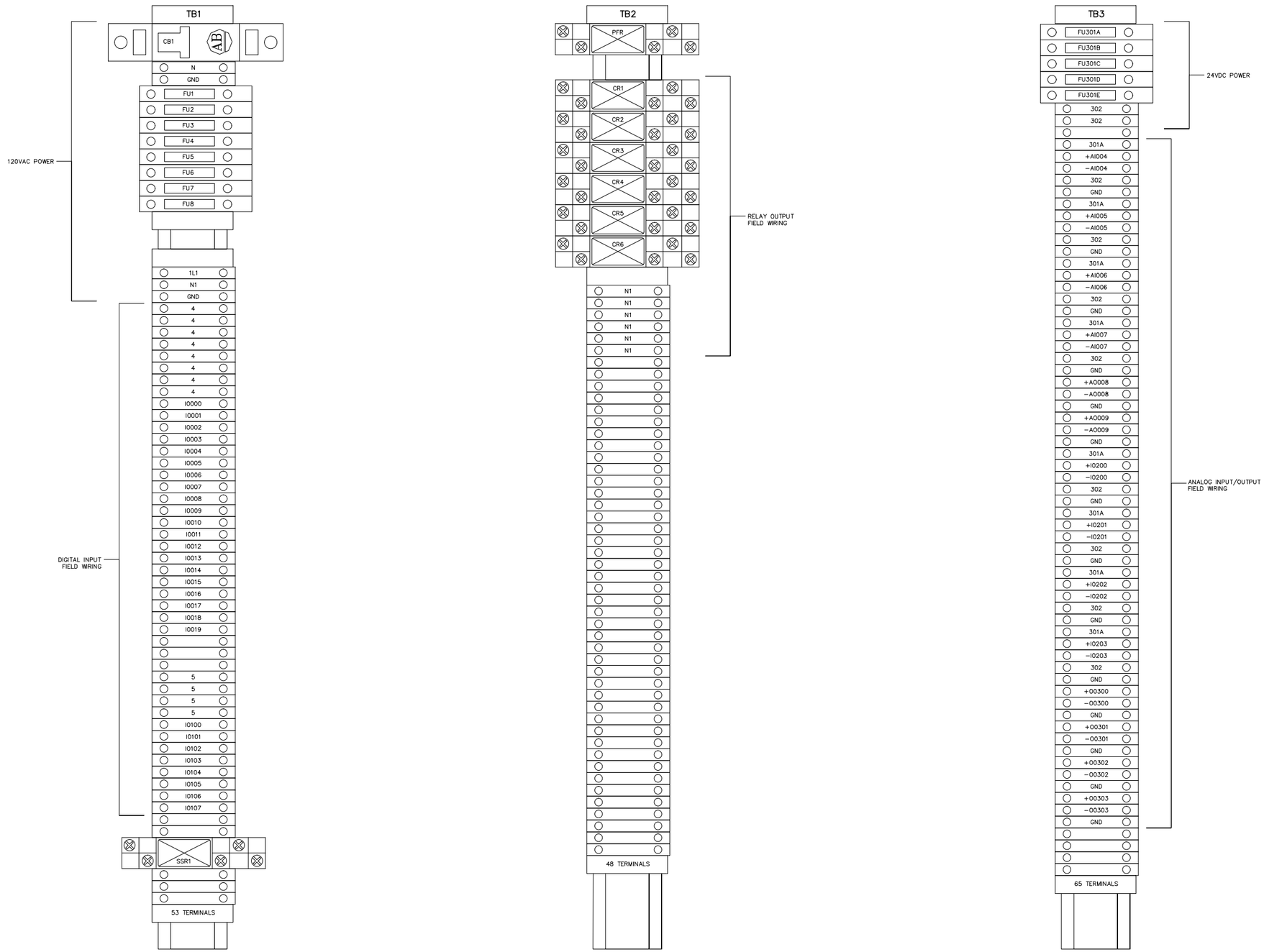

ISSUE FOR BID

960 Washington Street, Suite 325N
Dedham, Massachusetts 02026
800.446.5518 | www.woodardcurran.com
WOODARD & CURRAN
COMMITMENT & INTEGRITY DRIVE RESULTS

THIS DOCUMENT IS THE PROPERTY OF WOODARD & CURRAN INC. AND ITS CLIENT. REPRODUCTION OR MODIFICATION WITHOUT WRITTEN PERMISSION IS PROHIBITED.

REV	DESCRIPTION	DATE
A	FOR MASSDEP REVIEW	07/18/14
B	ISSUE FOR BID	03/11/15

DESIGNED BY: DC
DRAWN BY: RPM
CHECKED BY: BCC
224802-I603.DWG

STACKPOLE STREET BOOSTER STATION PLC-20 CONTROL PANEL TERMINAL BLOCK LAYOUT

LOWELL REGIONAL WATER UTILITY
LOWELL, MASSACHUSETTS

WATER SYSTEM IMPROVEMENTS

JOB NO.: 224802.20
DATE: MARCH 2015
SCALE: NTS
SHEET: 39 OF 47

I-603

\\wc\shared\Projects\224802 Lowell MA - Water System Improvement PEF 2011\wip\Drawings\Controls\STACKPOLE ST BOOSTER STATION\224802-I603.DWG, Mar 03, 2015 - 1:56pm

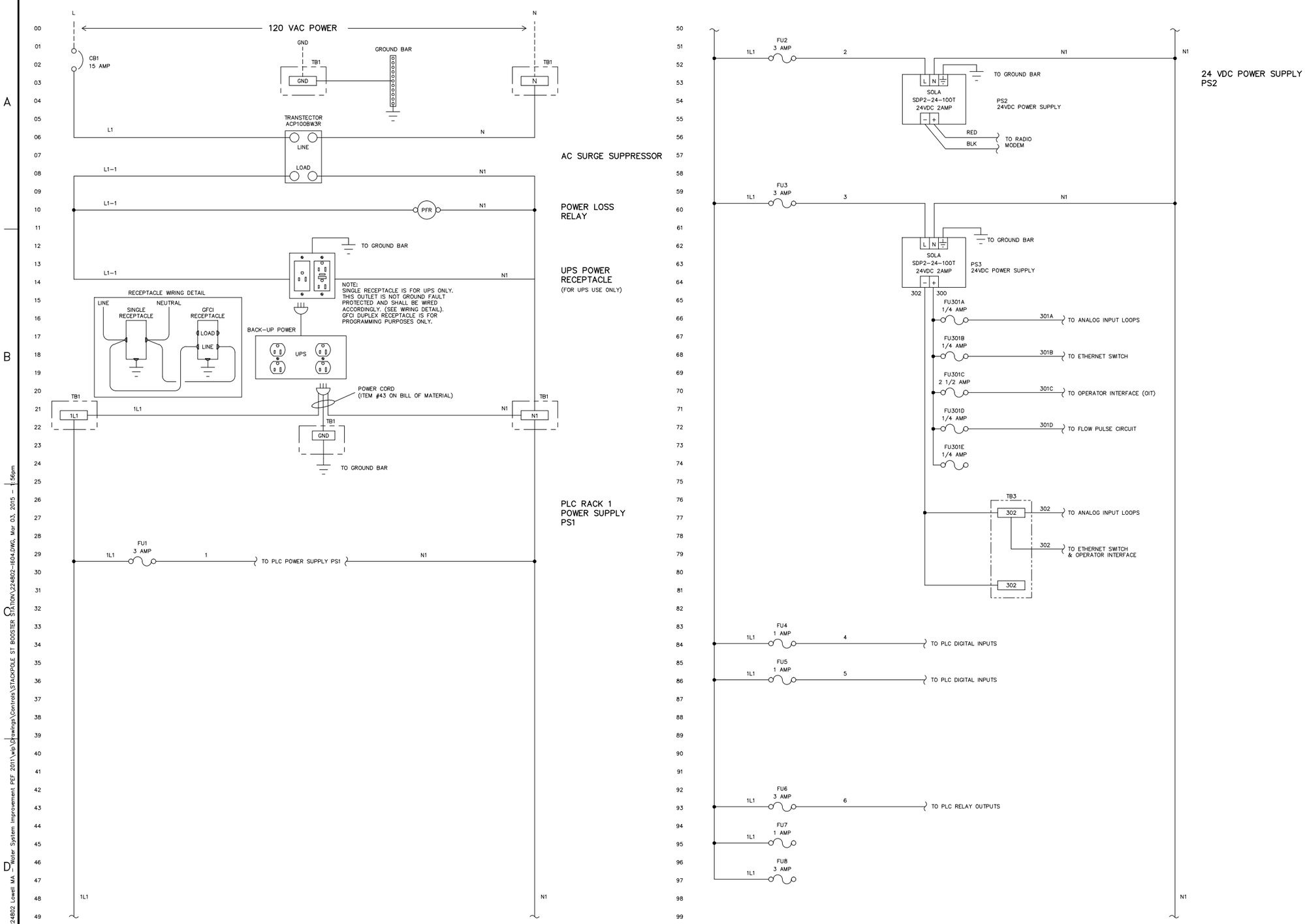

ISSUE FOR BID

980 Washington Street, Suite 325N
Dedham, Massachusetts 02026
800.446.5518 | www.woodardcurran.com
WOODARD & CURRAN
COMMITMENT & INTEGRITY DRIVE RESULTS

THIS DOCUMENT IS THE PROPERTY OF WOODARD & CURRAN INC. AND ITS CLIENT. REPRODUCTION OR MODIFICATION WITHOUT WRITTEN PERMISSION IS PROHIBITED.

REV	DESCRIPTION	DATE
B	ISSUE FOR BID	03/11/15
A	FOR MASSDEP REVIEW	07/18/14

DESIGNED BY: DC CHECKED BY: BCC
DRAWN BY: RPM 224802-I604.DWG

STACKPOLE STREET BOOSTER STATION
PLC-20 CONTROL PANEL
POWER DISTRIBUTION

LOWELL REGIONAL WATER UTILITY
LOWELL, MASSACHUSETTS

WATER SYSTEM IMPROVEMENTS

JOB NO.: 224802.20
DATE: MARCH 2015
SCALE: NTS
SHEET: 40 OF 47

I-604

\\wc\shared\Projects\224802 Lowell MA - Water System Improvement PEF 2011\wip\Drawings\Controls\STACKPOLE ST BOOSTER STATION\224802-I604.DWG, Mar 03, 2015 - 1:56pm

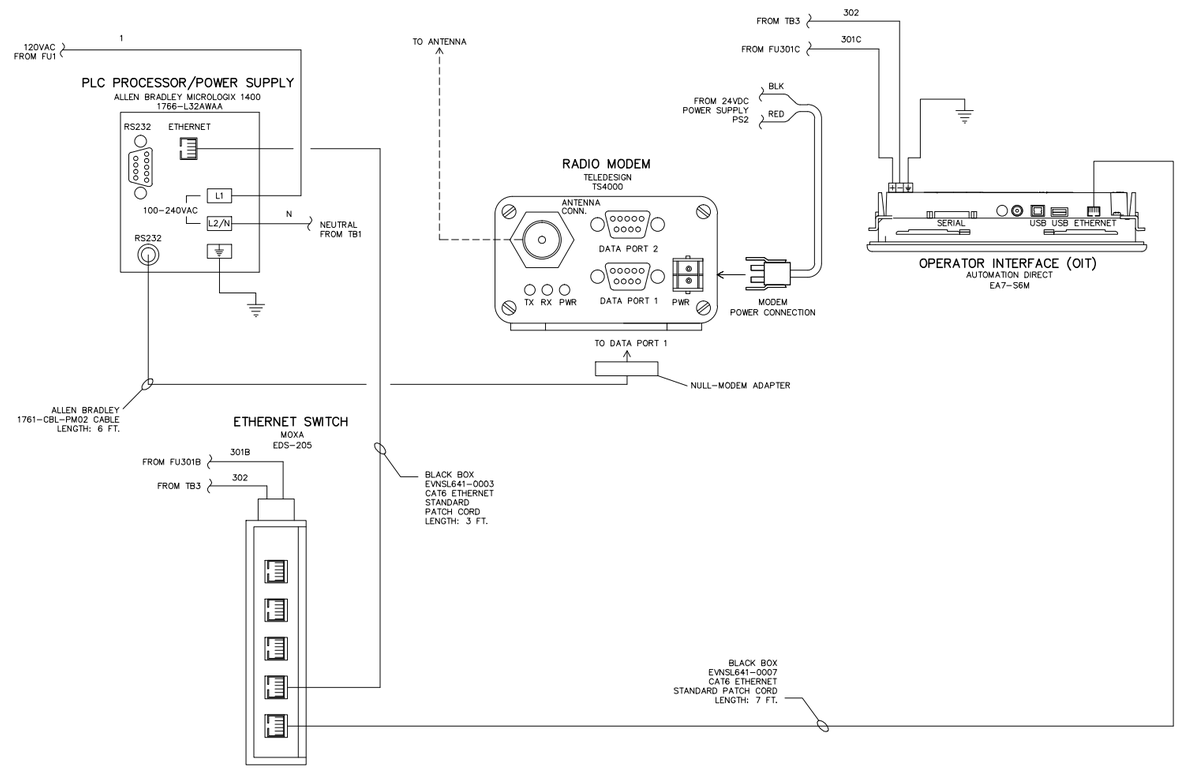

PORT DETAIL

MICROLOGIX 1400 PORT CONFIGURATION			
CHANNEL 0		CHANNEL 1	
PRIMARY PROTOCOL:	DF1 RADIO MODEM	PRIMARY PROTOCOL:	ETHERNET
BAUD:	9600	IP ADDRESS:	XX
NODE ADDRESS:	XX	SUBNET:	XX
CONTROL LINE:	NO HANDSHAKING	GATEWAY:	XX
PRE-TRANSMIT DELAY:	0 (x5ms)	BOOTP ENABLE:	UNCHECKED
PARITY:	NONE	DHCP ENABLE:	UNCHECKED
		HTSP SERVER ENABLE:	CHECKED
		AUTO NEGOTIATE:	CHECKED
		PORT SETTING:	10/100 Mbps FULL DUPLEX/HALF DUPLEX
		MSG CONNECTION TIMEOUT:	(x1ms) : 15000
		MSG REPLY TIMEOUT:	(x1ms) : 3000

ISSUE FOR BID

WOODARD & CURRAN
960 Washington Street, Suite 325N
Dedham, Massachusetts 02026
800.446.5518 | www.woodardcurran.com
COMMITMENT & INTEGRITY DRIVE RESULTS

THIS DOCUMENT IS THE PROPERTY OF WOODARD & CURRAN INC. AND ITS CLIENT. REPRODUCTION OR MODIFICATION WITHOUT WRITTEN PERMISSION IS PROHIBITED.

REV	DESCRIPTION	DATE
B	ISSUE FOR BID	03/11/15
A	FOR MASSDEP REVIEW	07/18/14

DESIGNED BY: DC CHECKED BY: BCC
DRAWN BY: RPM 224802-I605.DWG

STACKPOLE STREET BOOSTER STATION
PLC-20 CONTROL PANEL
COMMUNICATIONS

LOWELL REGIONAL WATER UTILITY
LOWELL, MASSACHUSETTS

WATER SYSTEM IMPROVEMENTS

JOB NO.: 224802.20
DATE: MARCH 2015
SCALE: NTS
SHEET: 41 OF 47

I-605

\\we-s\shared\Projects\224802 Lowell MA - Water System Improvement PEF 2011\wip\Drawings\Controls\STACKPOLE ST BOOSTER STATION\224802-I605.DWG, Mar 03, 2015 - 1:56pm

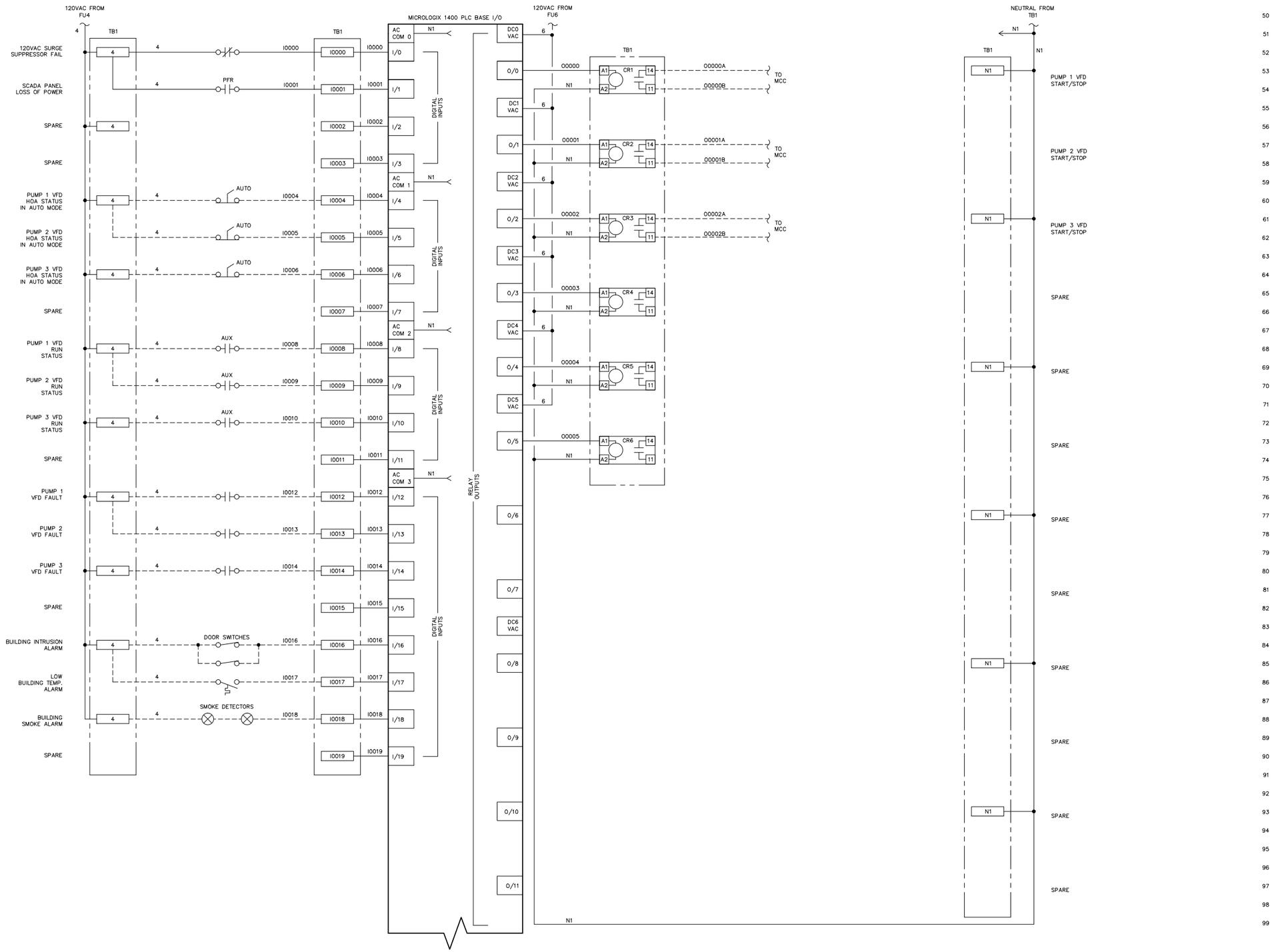

WOODARD & CURRAN
960 Washington Street, Suite 325N
Dedham, Massachusetts 02026
800.446.5518 | www.woodardcurran.com
COMMITMENT & INTEGRITY DRIVE RESULTS

THIS DOCUMENT IS THE PROPERTY OF WOODARD & CURRAN INC. AND ITS CLIENT. REPRODUCTION OR MODIFICATION WITHOUT WRITTEN PERMISSION IS PROHIBITED.

REV	DESCRIPTION	DATE
B	ISSUE FOR BID	03/11/15
A	FOR MASSDEP REVIEW	07/18/14

DESIGNED BY: DC CHECKED BY: BCC
DRAWN BY: RPM 224802-I606.DWG

STACKPOLE STREET BOOSTER STATION
PLC-20 CONTROL PANEL
PLC BASE I/O
DIGITAL INPUTS & RELAY OUTPUTS

LOWELL REGIONAL WATER UTILITY
LOWELL, MASSACHUSETTS

WATER SYSTEM IMPROVEMENTS

JOB NO.: 224802.20
DATE: MARCH 2015
SCALE: NTS
SHEET: 42 OF 47

I-606

ISSUE FOR BID

\\wc\shared\Projects\224802 Lowell MA - Water System Improvement PEF 2011\wip\Drawings\Controls\STACKPOLE ST BOOSTER STATION\224802-I606.DWG, Mar 03, 2015 - 1:56pm

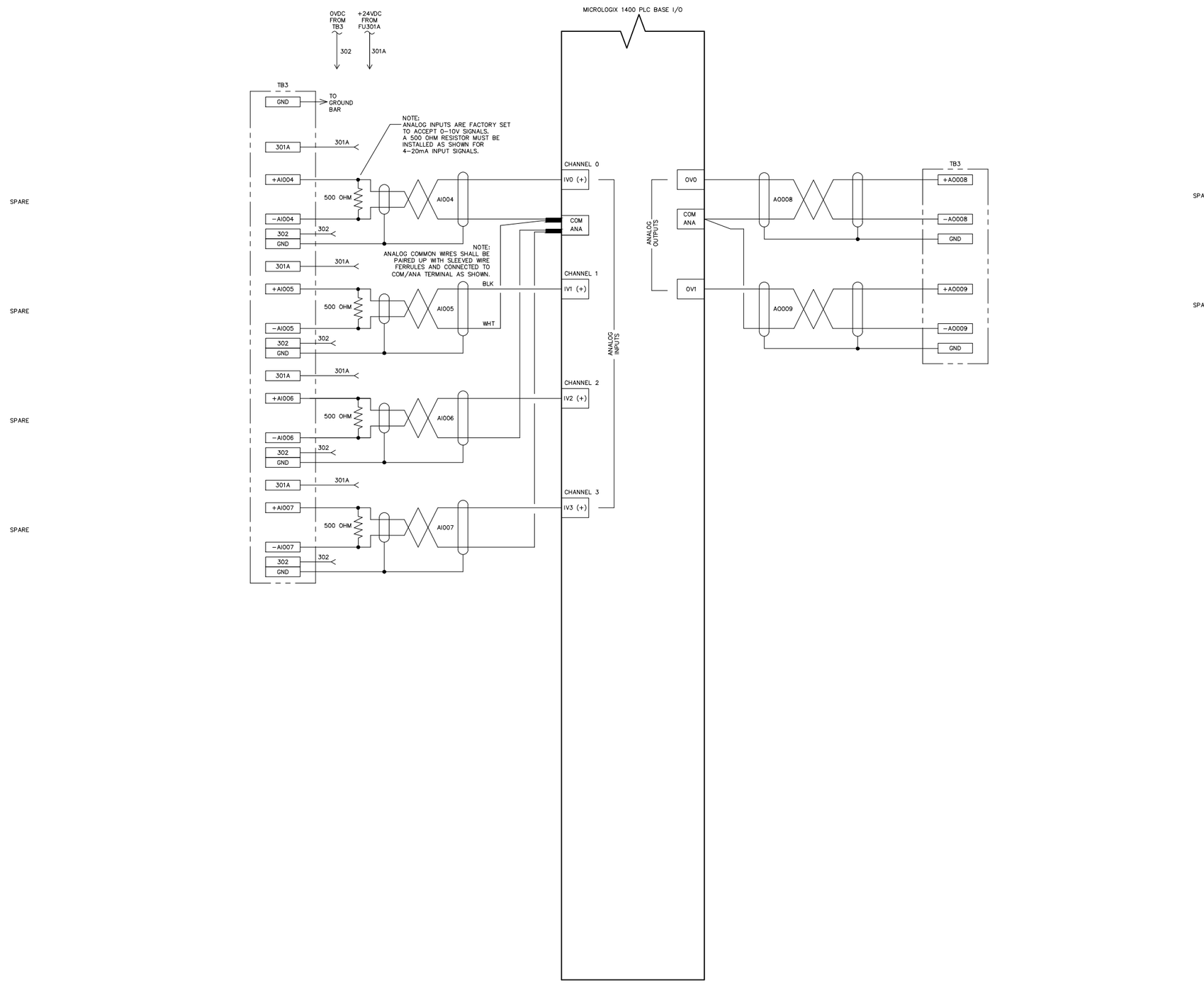

960 Washington Street, Suite 325N
Dedham, Massachusetts 02026
800.446.5518 | www.woodardcurran.com

WOODARD & CURRAN
COMMITMENT & INTEGRITY DRIVE RESULTS

THIS DOCUMENT IS THE PROPERTY OF WOODARD & CURRAN INC. AND ITS CLIENT. REPRODUCTION OR MODIFICATION WITHOUT WRITTEN PERMISSION IS PROHIBITED.

REV	DESCRIPTION	DATE
A	FOR MASSDEP REVIEW	07/18/14
B	ISSUE FOR BID	03/11/15

DESIGNED BY: DC
DRAWN BY: RPM
CHECKED BY: BCC
224802-I607.DWG

STACKPOLE STREET BOOSTER STATION
PLC-20 CONTROL PANEL
PLC BASE I/O
ANALOG INPUTS & OUTPUTS

LOWELL REGIONAL WATER UTILITY
LOWELL, MASSACHUSETTS

WATER SYSTEM IMPROVEMENTS

JOB NO.: 224802.20
DATE: MARCH 2015
SCALE: NTS
SHEET: 43 OF 47

I-607

ISSUE FOR BID

\\wc\shares\Projects\224802 Lowell MA - Water System Improvement PEF 2011\wip\Drawings\Controls\STACKPOLE ST BOOSTER STATION\224802-I607.DWG, Mar 03, 2015 - 1:56pm

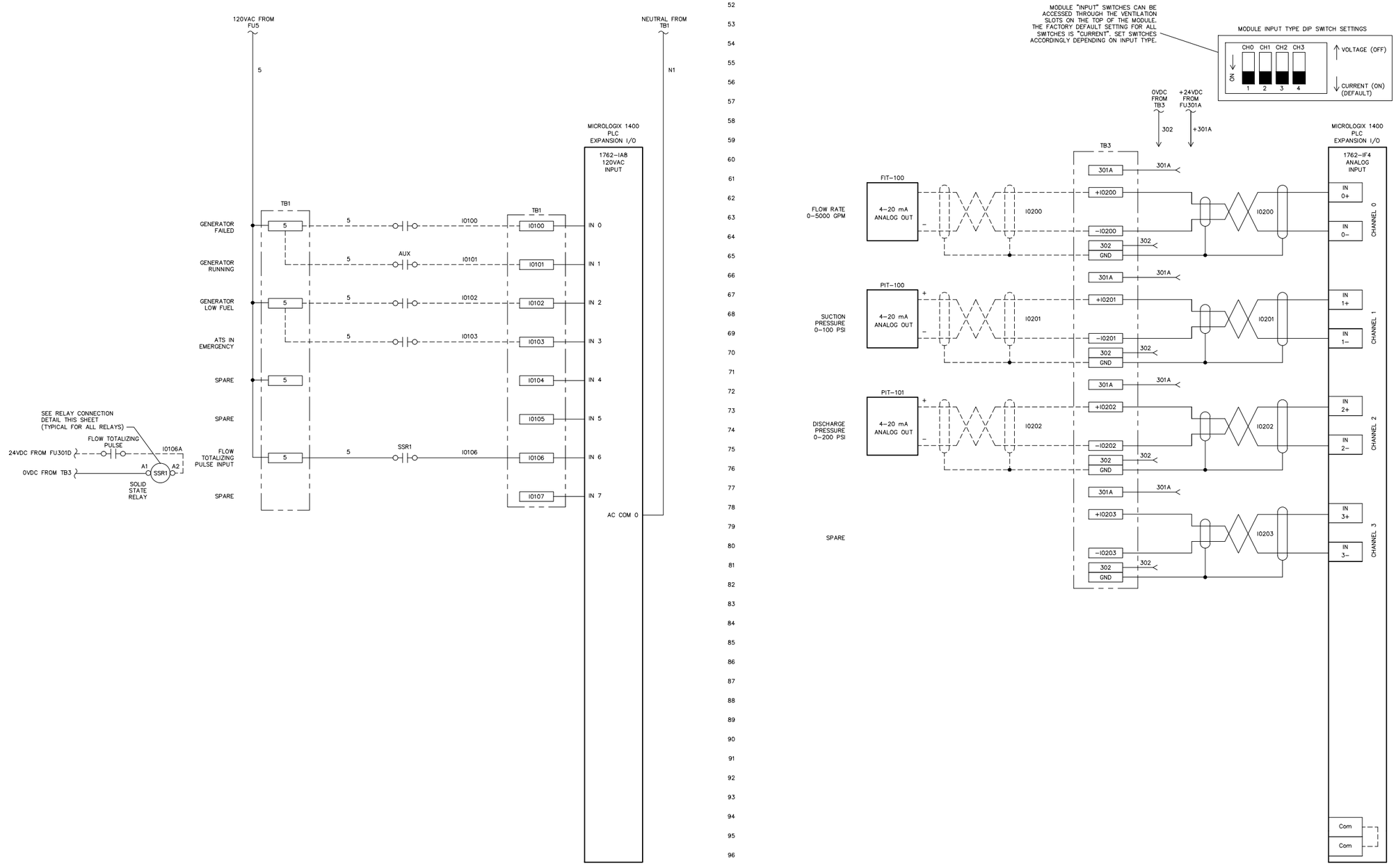

ISSUE FOR BID

980 Washington Street, Suite 325N
Dedham, Massachusetts 02026
800.446.5518 | www.woodardcurran.com

COMMITMENT & INTEGRITY DRIVE RESULTS

THIS DOCUMENT IS THE PROPERTY OF WOODARD & CURRAN INC. AND ITS CLIENT. REPRODUCTION OR MODIFICATION WITHOUT WRITTEN PERMISSION IS PROHIBITED.

REV	DESCRIPTION	DATE
B	ISSUE FOR BID	03/11/15
A	FOR MASSDEP REVIEW	07/18/14

DESIGNED BY: DC CHECKED BY: BCC
DRAWN BY: RPM 224802-I608.DWG

STACKPOLE STREET BOOSTER STATION
PLC-20 CONTROL PANEL
PLC EXPANSION I/O
DIGITAL & ANALOG INPUTS

LOWELL REGIONAL WATER UTILITY
LOWELL, MASSACHUSETTS

WATER SYSTEM IMPROVEMENTS

JOB NO.: 224802.20
DATE: MARCH 2015
SCALE: NTS
SHEET: 44 OF 47

I-608

\\wc\shared\Projects\224802 Lowell MA - Water System Improvement PEF 2011\wip\Drawings\Controls\STACKPOLE ST BOOSTER STATION\224802-I608.DWG, Mar 03, 2015 - 1:56pm

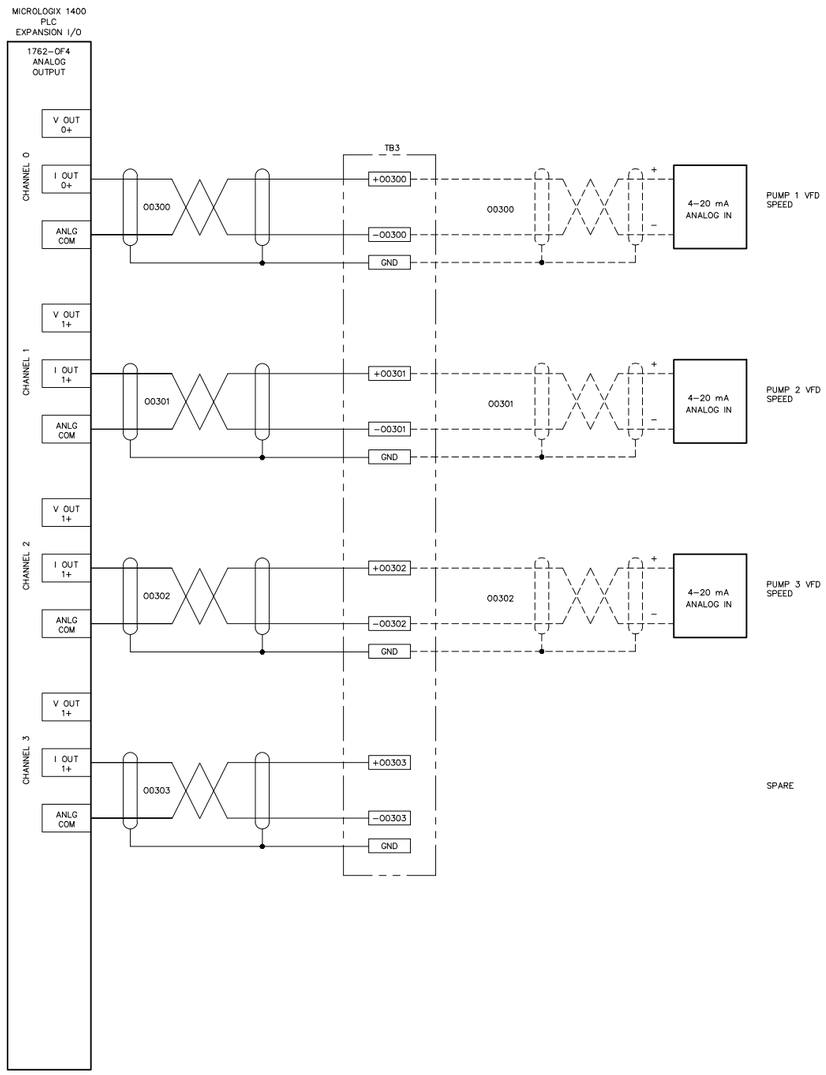

ISSUE FOR BID

WOODARD & CURRAN
980 Washington Street, Suite 325N
Dedham, Massachusetts 02026
800.446.5518 | www.woodardcurran.com
COMMITMENT & INTEGRITY DRIVE RESULTS

THIS DOCUMENT IS THE PROPERTY OF WOODARD & CURRAN INC. AND ITS CLIENT. REPRODUCTION OR MODIFICATION WITHOUT WRITTEN PERMISSION IS PROHIBITED.

REV	DESCRIPTION	DATE
B	ISSUE FOR BID	03/11/15
A	FOR MASSDEP REVIEW	07/18/14

DESIGNED BY: DC CHECKED BY: BCC
DRAWN BY: RPM 224802-I609.DWG

STACKPOLE STREET BOOSTER STATION
PLC-20 CONTROL PANEL
PLC EXPANSION I/O
ANALOG OUTPUTS

LOWELL REGIONAL WATER UTILITY
LOWELL, MASSACHUSETTS

WATER SYSTEM IMPROVEMENTS

JOB NO.: 224802.20
DATE: MARCH 2015
SCALE: NTS
SHEET: 45 OF 47

I-609

\\we\shared\Projects\224802 Lowell MA - Water System Improvement PEF 2011\wip\Drawings\Controls\STACKPOLE ST BOOSTER STATION\224802-I609.DWG, Mar 03, 2015 - 1:56pm

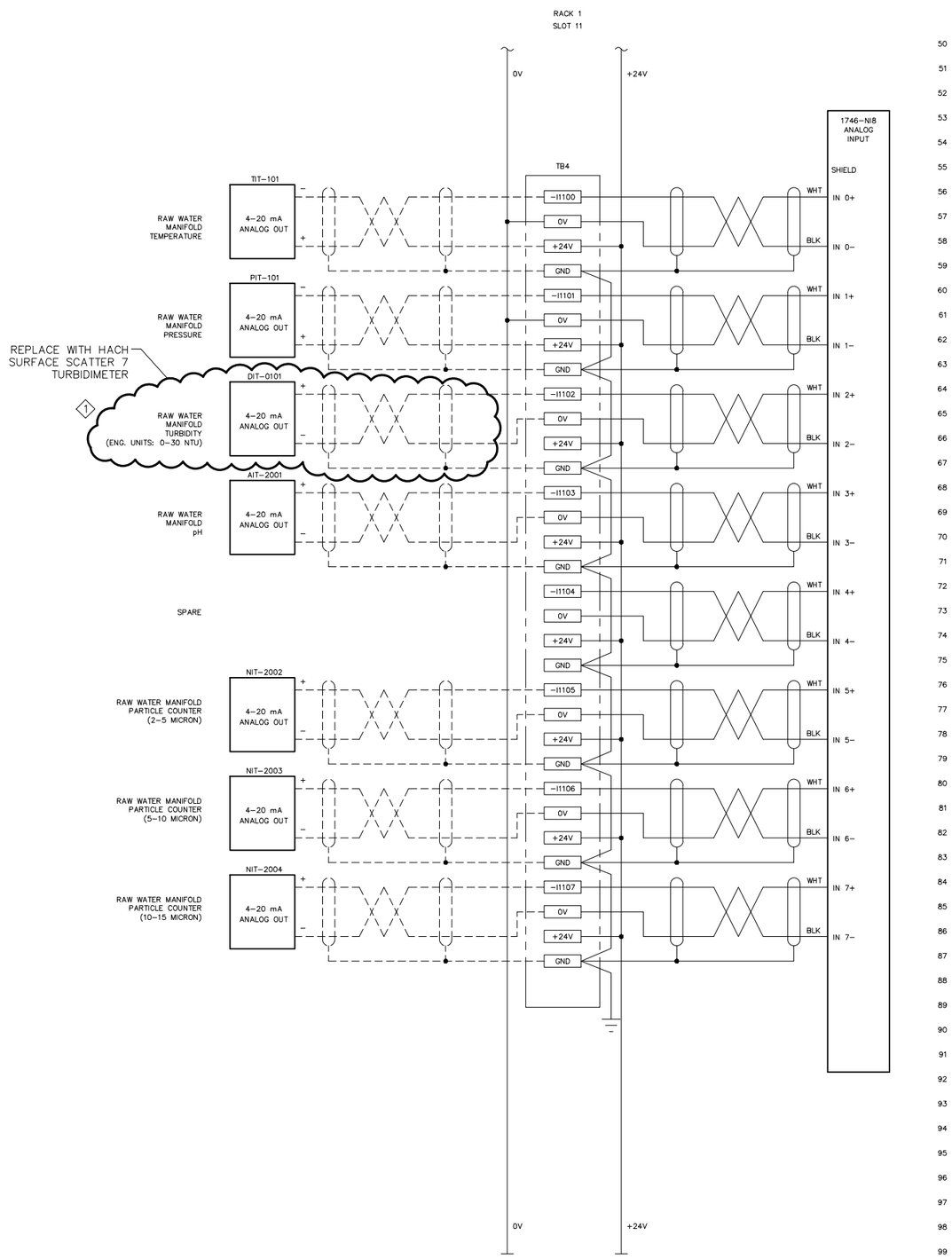

INTENTIONALLY LEFT BLANK

KEYED NOTES:
1. REPLACE WITH HACH SURFACE SCATTER 7 TURBIDIMETER.

ISSUE FOR BID

WOODARD & CURRAN
960 Washington Street, Suite 325N
Dedham, Massachusetts 02026
800.446.5518 | www.woodardcurran.com
COMMITMENT & INTEGRITY DRIVE RESULTS

THIS DOCUMENT IS THE PROPERTY OF WOODARD & CURRAN INC. AND ITS CLIENT. REPRODUCTION OR MODIFICATION WITHOUT WRITTEN PERMISSION IS PROHIBITED.

REV	DESCRIPTION	DATE
B	ISSUE FOR BID	03/11/15
A	FOR MASSDEP REVIEW	07/18/14

DESIGNED BY: DC CHECKED BY: BCC
DRAWN BY: RPM 224802-I-701.dwg

PLC-16 CONTROL PANEL ANALOG INPUTS MODIFICATIONS

LOWELL REGIONAL WATER UTILITY
LOWELL, MASSACHUSETTS

WATER SYSTEM IMPROVEMENTS

JOB NO.: 224802.20
DATE: MARCH 2015
SCALE: NTS
SHEET: 46 OF 47

I-701

\\we\shared\Projects\224802 Lowell MA - Water System Improvement PEF 2011\wip\Drawings\Controls\224802-I-701.dwg, Mar 02, 2015 - 11:56am

BILL OF MATERIAL

ITEM	QTY.	MANUFACTURER	PART NUMBER	DESCRIPTION	DESIGNATION
1	1	HOFFMAN	A6P8	BACK PANEL, 6.75" x 6.88"	SUB PANEL
2	1	HOFFMAN	A884PHC	ENCLOSURE, NEMA 4X POLYESTER, 10.25" x 9.25" x 5.25"	ENCLOSURE
3	10	ALLEN BRADLEY	1492-J4	TERMINAL BLOCK	TB1
4	2	ALLEN BRADLEY	1492-EBJ3	TERMINAL BLOCK END BARRIER	TB1
5	2	ALLEN BRADLEY	1492-EAJ35	TERMINAL BLOCK END ANCHOR	TB1
6	1	ALLEN BRADLEY	1492-CJJ6-10	TERMINAL BLOCK JUMPER, 10 POLE	TB1
7	1	ALLEN BRADLEY	1492-JG4	TERMINAL BLOCK, GROUNDING	TB1
8	1	ALLEN BRADLEY	1492-M6X12	TERMINAL BLOCK BLANK MARKING TAGS, 120 CT.	TB1
9					
10	1	ALLEN BRADLEY	199-DR1	DIN RAIL, STANDARD	
11	1	ALLEN BRADLEY	800H-HR2D1	2-POSITION SEL. SWITCH (MAINTAINED IN BOTH POSITIONS)	SS1
12	1	ALLEN BRADLEY	800H-W133	STANDARD LEGEND PLATE "OFF-ON"	SS1
13	2	PANEL FABRICATOR		NAMEPLATE, PHENOLIC, ENGRAVED	SEE NAMEPLATE SCHEDULE
14	1	VERIS INDUSTRIES	H609	CURRENT SWITCH, 1.25A-50A CURRENT RANGE, SPLIT CORE	CS1
15	1	LEVITON	97W475	20A, 125V, NEMA L5-20R TWIST-LOCK RECEPTACLE, WATERTIGHT COVER	PUMP POWER RECEPTACLE
16	1	LEVITON	FDBX1-Y	SINGLE GANG BOX, YELLOW, WATERTIGHT	PUMP POWER RECEPTACLE
17	1	LEVITON	26W47	20A, 125V, NEMA L5-20P TWIST-LOCK PLUG	PUMP POWER PLUG
18					
19					
20					
21					
22					
23				ITEMS 15, 16 & 17 SHALL BE SHIPPED LOOSE WITH PANEL	
24					
25					

NAMEPLATE SCHEDULE

	ITEM	DIMENSION	DESCRIPTION	FABRICATION COMMENTS
*	A	6" x 1.00"	SAMPLE PUMP XXXX	NAMEPLATE TO BE BLACK WITH WHITE LETTERS WITH ADHESIVE BACK. TEXT SIZE TO BE .25
	B	4" x .75"	FOR SAMPLE PUMP ONLY	NAMEPLATE TO BE RED WITH WHITE LETTERS WITH ADHESIVE BACK. TEXT SIZE TO BE .18

* SEE SAMPLE PUMP LIST, THIS SHEET

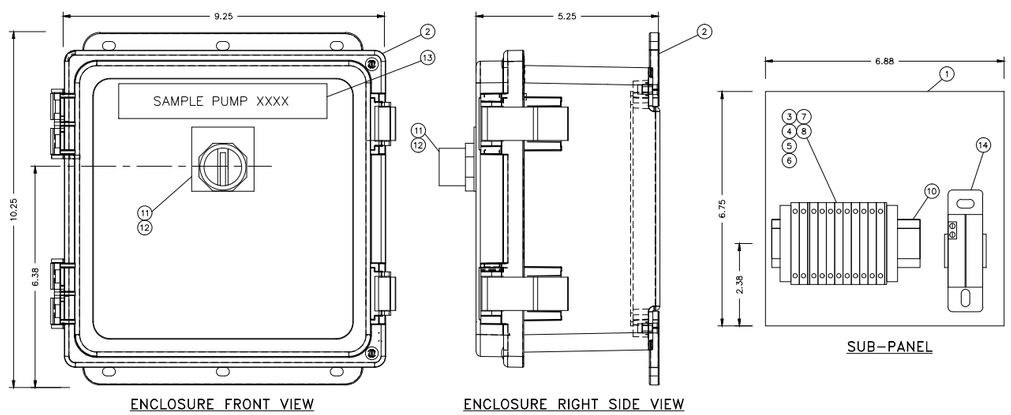

SAMPLE PUMP CONTROL PANEL FABRICATION DETAIL

SCALE: N.T.S.

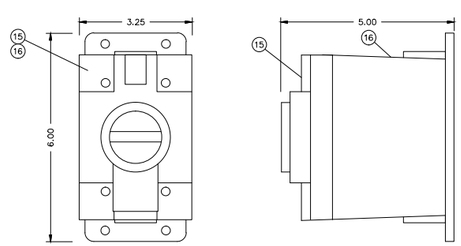

NOTE:
RECEPTACLE SHALL BE LOCATED ADJACENT TO PUMP.

SAMPLE PUMP TWIST-LOC RECEPTACLE FABRICATION DETAIL

SCALE: N.T.S.

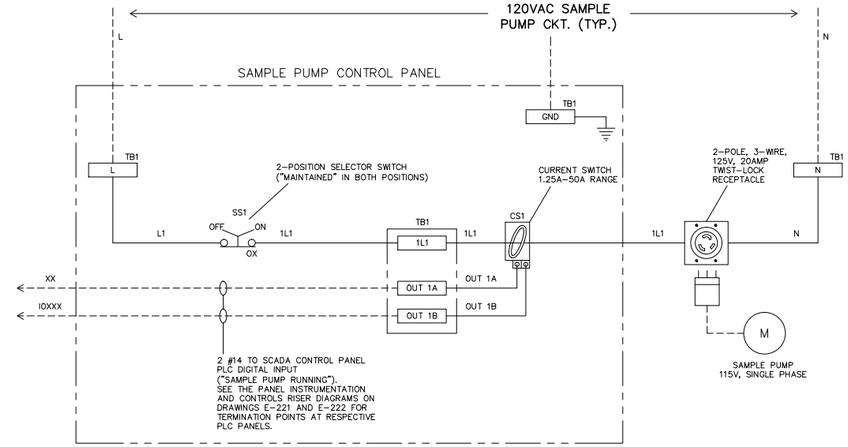

SAMPLE PUMP WIRING DETAIL

SAMPLE PUMP LIST

SAMPLE PUMP TAG NO.	PUMP TYPE	SAMPLE PUMP LOCATION	
		SHEET NO.	ROOM
SP-2201	1	M-201	RAW WATER FLOW CONTROL VAULT
SP-2301	1	M-201	RAW WATER FLOW CONTROL VAULT
SP-2401	1	M-204	SAND MEDIA FILTER ROOM
SP-2402	1	M-205	DUAL MEDIA FILTER ROOM
SP-2501	2	M-204	SAND MEDIA FILTER ROOM
SP-2502	2	M-204	SAND MEDIA FILTER ROOM
SP-2503	2	M-204	SAND MEDIA FILTER ROOM
SP-2504	2	M-205	DUAL MEDIA FILTER ROOM
SP-2505	2	M-205	DUAL MEDIA FILTER ROOM
SP-2506	2	M-205	DUAL MEDIA FILTER ROOM
SP-2507	2	M-205	DUAL MEDIA FILTER ROOM
SP-2601	1	M-204	SAND MEDIA FILTER ROOM
SP-2602	1	M-205	DUAL MEDIA FILTER ROOM
SP-2801	1	M-203	GAC FILTER ROOM

NOTE:
DETAILS ON THIS SHEET ARE TYPICAL FOR 14 SAMPLE PUMPS.
SEE "SAMPLE PUMP LIST" FOR DETAILS.

ISSUE FOR BID

WOODARD & CURRAN
960 Washington Street, Suite 325N
Dedham, Massachusetts 02026
800.446.5518 | www.woodardcurran.com
COMMITMENT & INTEGRITY DRIVE RESULTS

THIS DOCUMENT IS THE PROPERTY OF WOODARD & CURRAN INC. AND ITS CLIENT. REPRODUCTION OR MODIFICATION WITHOUT WRITTEN PERMISSION IS PROHIBITED.

REV	DESCRIPTION	DATE
B	ISSUE FOR BID	03/11/15
A	FOR MASSDEP REVIEW	07/18/14

DESIGNED BY: DC CHECKED BY: DC
DRAWN BY: RPM 224802-I-801.dwg

TYPICAL SAMPLE PUMP CONTROL PANEL EQUIPMENT LAYOUT & WIRING DETAILS

LOWELL REGIONAL WATER UTILITY
LOWELL, MASSACHUSETTS

WATER SYSTEM IMPROVEMENTS

JOB NO.: 224802.20
DATE: MARCH 2015
SCALE: NONE
SHEET: 47 OF 47

I-801

\\wc\shared\Projects\224802 Lowell MA - Water System Improvement PEF 2011\wip\Drawings\Controls\224802-I-801.dwg, Mar 03, 2015 - 1:56pm