LOWELL REGIONAL WASTEWATER UTILITY (LRWWU)

COPY NO. ____

CITY OF LOWELL, MASSACHUSETTS
CSO SEWER SEPARATION PROGRAM

DECATUR WEST STORMWATER MANAGEMENT AND MARGINAL SEWER RELIEF PIPE

CWSRF PROJECT #3976
CONTRACT NO. 15-01 / IFB 15-78

LOWELL CITY MANAGER

KEVIN J. MURPHY

LOWELL CITY COUNCILORS

HONORABLE RODNEY M. ELLIOTT, MAYOR
JOHN J. LEAHY, VICE CHAIR
COREY BELANGER
EDWARD J. KENNEDY
WILLIAM F. MARTIN
RITA M. MERCIER
JAMES L. MILINAZZO
DAN ROURKE
WILLIAM SAMARAS

LRWWU EXECUTIVE DIRECTOR

MARK YOUNG

LRWWU ENGINEERING MANAGER

MICHAEL STUER

LOCATION PLAN

LIST OF DRAWINGS

SHEET	TITLE
GP	GENERAL PLAN
LGN	LEGEND AND GENERAL NOTES
C–1	FATHER MORISSETTE BOULEVARD AND JAMES STREET
C–2	MOODY STREET AND SPAULDING STREET
C–3	MERRIMACK STREET
C–4	HOUSE OF HOPE EASEMENT, UMASS LOWELL EASEMENT, AND DECATUR WAY
C–5	SALEM STREET
C–6	MARGINAL SEWER RELIEF PIPE AND DETAILS
C–7	MARGINAL SEWER RELIEF CONTROL STRUCTURE DETAILS
D–1	MISCELLANEOUS DETAILS I
D–2	MISCELLANEOUS DETAILS II
D–3	MISCELLANEOUS DETAILS III
D–4	MISCELLANEOUS DETAILS IV AND CATCH BASIN SCHEDULE
L–1	DECATUR WAY EXISTING CONDITIONS PLAN
L–2	DECATUR WAY SITE PREPARATION PLAN
L–3	DECATUR WAY LAYOUT AND MATERIALS PLAN
L–4	DECATUR WAY GRADING AND DRAINAGE PLAN
L–5	DECATUR WAY SITE SECTION
L–6	DECATUR WAY SITE DETAILS I
L–7	DECATUR WAY SITE DETAILS II
L–8	DECATUR WAY ARBOR STRUCTURE
L–9	DECATUR WAY SITE ENLARGEMENTS

APRIL 2015

COMMONWEALTH OF MASSACHUSETTS
JAMES S. DRAKE
CIVIL
No. 30269
REGISTERED PROFESSIONAL ENGINEER

CDM Smith

MANCHESTER, NEW HAMPSHIRE

Water ***Environment*** ***Transportation*** ***Energy*** ***Facilities***

0552–80269

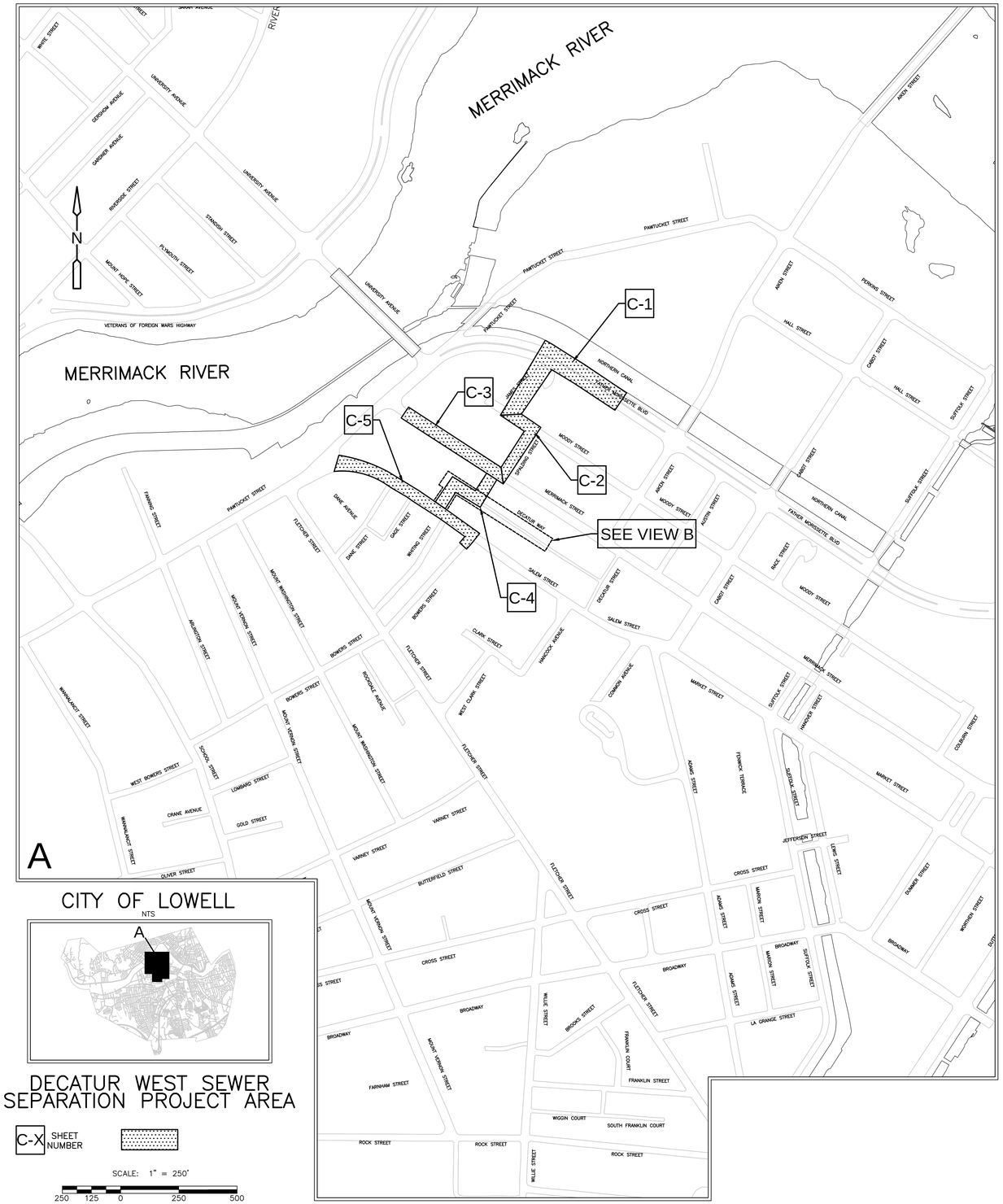

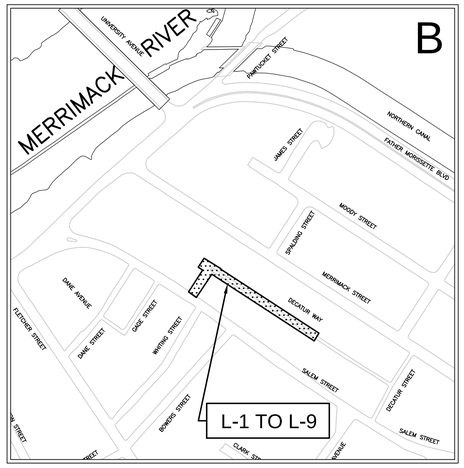

CITY OF LOWELL

NTS

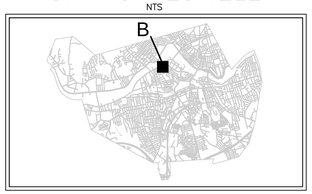

DECATUR WAY PROJECT AREA

L-X SHEET NUMBER

SCALE: 1" = 250'

250 125 0 250 500

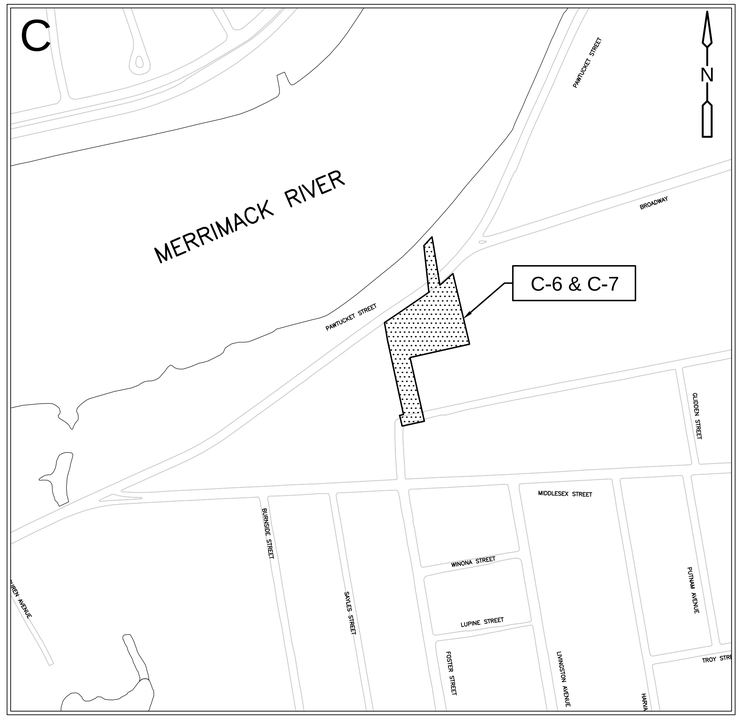

CITY OF LOWELL

NTS

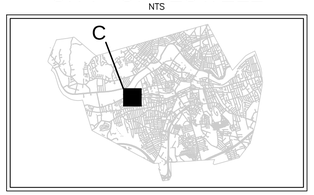

MARGINAL SEWER RELIEF PIPE PROJECT AREA

C-X SHEET NUMBER

SCALE: 1" = 250'

250 125 0 250 500

CITY OF LOWELL

NTS

DECATUR WEST SEWER SEPARATION PROJECT AREA

C-X SHEET NUMBER

SCALE: 1" = 250'

250 125 0 250 500

COMMONWEALTH OF MASSACHUSETTS
JAMES S. DRAKE
No. 39848
REGISTERED PROFESSIONAL ENGINEER

REV. NO.	DATE	DRWN	CHKD	REMARKS

DESIGNED BY: S. CAREY
DRAWN BY: S. CAREY
SHEET CHK'D BY: D. FREEMAN
CROSS CHK'D BY: J. DRAKE
APPROVED BY: J. DRAKE
DATE: APRIL 2015

CDM Smith
670 N. Commercial St
Manchester, NH 03101
Tel: (603) 222-8300

LOWELL REGIONAL WASTEWATER UTILITY
LOWELL, MASSACHUSETTS

DECATUR WEST STORMWATER MANAGEMENT AND MARGINAL SEWER RELIEF PIPE

GENERAL PLAN

PROJECT NO. 0552-107165
FILE NAME: G001NFPL.DWG

SHEET NO.
GP

0552-80270

XREFs: [CDMS_2436] Images: []
Last saved by: LAVOIESD Time: 3/23/2015 8:29:18 AM
pw:\\docpwep1-PW_XM1\0552\107165\04 Design Services NM_30%\01 General\10 CADD\G001NFPL.dwg
©2015 CDM SMITH ALL RIGHTS RESERVED.
REUSE OF DOCUMENTS: THESE DOCUMENTS AND DESIGNS PROVIDED BY PROFESSIONAL SERVICE, INCORPORATED HEREIN, ARE THE PROPERTY OF CDM SMITH AND ARE NOT TO BE USED, IN WHOLE OR PART, FOR ANY OTHER PROJECT WITHOUT THE WRITTEN AUTHORIZATION OF CDM SMITH.

GENERAL NOTES

1. PLAN AND TOPOGRAPHY FROM SURVEY PERFORMED BY TF MORAN OF BEDFORD, NH IN WINTER 2015, AND WINTER 2010. TEMPORARY BENCHMARKS ARE LOCATED ON THE PLANS WITH DESCRIPTIONS AND ELEVATIONS.
2. ELEVATIONS ON ALL PLAN AND PROFILE SHEETS REFER TO VERTICAL DATUM NAVD 1988 AND HORIZONTAL DATUM NAD 1983/92.
3. NOTES PERTAINING TO NEW WORK SHOWN THUS: NEW WORK
4. HAYBALES SHALL BE PLACED AROUND ALL CATCH BASINS SUBJECT TO RUNOFF FROM CONSTRUCTION AREAS.
5. THE LOCATION, SIZE AND MATERIAL OF EXISTING PIPES, DUCTS, CONDUITS AND OTHER UNDERGROUND STRUCTURES AND THE LOCATION OF PROPERTY LINES SHOWN ON THESE PLANS ARE NOT WARRANTED TO BE EXACT, NOR IS IT WARRANTED THAT ALL ARE SHOWN. EXACT LOCATIONS SHALL BE DETERMINED BY THE CONTRACTOR.
6. MANHOLE LOCATIONS ARE APPROXIMATE AND IN SOME CASES MAY BE ALTERED TO MINIMIZE PIPE CUTTING OR FOR OTHER APPROVED REASONS, AS DIRECTED BY OWNER AND ENGINEER.
7. UNLESS OTHERWISE NOTED, PVC PIPE SHALL BE SDR 35, DI PIPE SHALL BE CLASS 52 AND RC PIPE SHALL BE CLASS IV.
8. SEWER SERVICE CONNECTIONS SHALL BE CONNECTED TO THE MAINLINE SEWER UNLESS NOTED OTHERWISE. NEW SEWER SERVICE CONNECTIONS SHALL BE INSTALLED SUCH THAT THEY ARE BENEATH THE NEW WATER MAIN AND WATER SERVICE CONNECTIONS. EXACT LOCATION AND NUMBER TO BE DETERMINED IN THE FIELD.
9. WHEN IT IS IMPOSSIBLE TO ACHIEVE HORIZONTAL (10-FT) OR VERTICAL (18-IN) SEPARATION BETWEEN PIPES, THE SEWER SHALL BE CONSTRUCTED OF MECHANICAL JOINT CEMENT-LINED DUCTILE IRON PIPE OR ANOTHER EQUIVALENT THAT IS WATERTIGHT AND STRUCTURALLY SOUND. THE NEW SEWER SHALL BE REPLACED FOR A MINIMUM OF 10-FT ON EITHER SIDE OF CROSSING UNLESS OTHERWISE DIRECTED BY THE ENGINEER. PIPES SHOULD BE TESTED ACCORDING TO THE RESPECTED SPECIFICATION SECTION (WATER MAIN 02611, SEWER 02610).
10. GAS MAINS AND TELEPHONE LINES ARE ASSUMED TO HAVE THREE FEET OF COVER UNLESS SHOWN OTHERWISE. WATER MAINS ARE ASSUMED TO HAVE FIVE FEET OF COVER UNLESS SHOWN OTHERWISE. IT IS NOT WARRANTED THAT ALL UTILITIES ARE SHOWN.
11. ABANDONED PIPES SHALL BE FILLED WITH CONTROLLED DENSITY FILL OR SAND AS DIRECTED BY THE ENGINEER. ABANDONED PIPE CONNECTIONS AT MANHOLES SHALL BE SEALED FROM WITHIN THE MANHOLE WITH A 12-IN. MASONRY PLUG CONSISTING OF BRICK, MORTAR AND NON-SHRINK GROUT.
12. UNLESS OTHERWISE NOTED, MANHOLES FOR NEW SEWER AND DRAIN PIPES SHALL BE 4-FOOT DIAMETER MANHOLES AS SPECIFIED.
13. GAS LINE RELOCATION WORK WILL BE COORDINATED WITH ENGINEER AND CONTRACTOR, AND WILL BE DONE BY NATIONAL GRID AT THEIR EXPENSE.
14. EXISTING CATCH BASINS SHALL BE CONNECTED TO THE NEW DRAIN AT LOCATIONS SHOWN ON THE PLANS AND DETAILED ON THE CATCH BASIN SCHEDULE ON SHEET D-4. THE LOCATION OF THE NEW CATCH BASINS ARE APPROXIMATELY SHOWN. FINAL LOCATIONS SHALL BE DETERMINED BY THE ENGINEER.
15. INITIAL TRENCH-WIDTH PAVEMENT SHALL BE INSTALLED AT THE END OF EACH WORK WEEK, UNLESS OTHERWISE DIRECTED BY THE OWNER.
16. SUBSURFACE INVESTIGATIONS (BORINGS) WERE CONDUCTED BY NEW ENGLAND BORING CONTRACTORS OF DERRY, NH IN WINTER 2015, WINTER 2011 AND SPRING 2010. BORING LOGS ARE APPENDED TO THE SPECIFICATIONS.
17. COORDINATE THE ADJUSTMENT OF ALL EXISTING UTILITIES WITH EACH RESPONSIBLE OWNER PRIOR TO RECONSTRUCTION AND/OR PAVING OPERATIONS. ALL STRUCTURES SHALL BE RAISED TO FINISH GRADES PRIOR TO THE END OF THE OF THE CONSTRUCTION SEASON AND PRIOR TO FINISHING PAVING, AS DIRECTED BY THE ENGINEER.
18. ALL DRAINAGE PIPE INSTALLED BETWEEN MANHOLES AND CATCH BASINS SHALL HAVE A MINIMUM OF 3-FEET OF COVER OVER THE PIPE AND SHALL HAVE A MINIMUM SLOPE OF 0.005 FT/FT. ALL PRE-CAST CONCRETE TOP SLABS FOR CATCH BASINS SHALL HAVE ECCENTRIC OPENINGS.
19. SAW CUT ALL DRIVEWAYS, WALKWAYS AND SIDEWALKS AT EDGE OF RIGHT-OF-WAY OR AS DIRECTED BY THE ENGINEER TO TRANSITION EXISTING DRIVEWAY TO FINISH GRADE OF PROPOSED BITUMINOUS CONCRETE ROADWAY OR SIDEWALK.
20. MAINTAIN THE AVAILABILITY OF SEWER SERVICE DURING THE CONSTRUCTION OF THIS PROJECT, PLUGGING AND BYPASS PUMPING OF EXISTING MANHOLES WILL BE REQUIRED. DESCRIBE METHODS OF MAINTAINING FLOWS PRIOR TO THE START OF CONSTRUCTION. SEE SPECIFICATIONS SECTIONS 01510 AND 02658.
21. PROVIDE AND UPDATE A CONSTRUCTION SCHEDULE AS SPECIFIED IN ARTICLE 2.07 AND 6.04 OF THE GENERAL CONDITIONS.
22. SUBMIT TO THE ENGINEER A TRAFFIC PLAN AS SPECIFIED IN SECTION 01570 OF THE SPECIFICATIONS.
23. COORDINATE ACTIVITIES WITH LOWELL WATER DEPARTMENT FOR WATER MAIN REPLACEMENT, RELOCATION, LINE STOP AND VALVE INSTALLATION. LOCATIONS OF WATER MAIN WORK ARE IDENTIFIED ON THE DRAWINGS.
24. NOT ALL TEST PIT LOCATIONS ARE SHOWN ON THE PLANS. EXCAVATE TEST PITS IN LOCATIONS AS DIRECTED BY THE ENGINEER. TEST PITS SHALL BE DUG TO ADJUST PIPING AS REQUIRED BY THE ENGINEER.
25. COORDINATE THE PROTECTION/RELOCATION OF UTILITY POLES WITH NATIONAL GRID.
26. UNDERGROUND SERVICES TO HOUSES ARE NOT SHOWN. CONTRACTOR SHALL IDENTIFY LOCATION OF UTILITIES AS NEEDED.
27. LIMITS OF CLEARING AND GRUBBING ARE LIMITS OF TEMPORARY CONSTRUCTION UNLESS INDICATED OTHERWISE. MINIMIZE CLEARING AND GRUBBING AS MUCH AS POSSIBLE. ALL CROSS COUNTRY AREAS SHALL BE LOAMED AND SEEDED TO THE LIMITS DISTURBED BY CONSTRUCTION UNLESS OTHERWISE NOTED.
28. SIDEWALK AND RAMP RESTORATION TO INCLUDE REPLACEMENT BACK TO EXISTING CONDITIONS PRIOR TO CONSTRUCTION WITH RESPECT TO WIDTH AND MATERIALS. ALL SIDEWALK RESTORATION SHALL BE CONSTRUCTED TO THE SPECIFICATIONS SET FORTH IN THE COMMONWEALTH OF MASSACHUSETTS, EXECUTIVE OFFICE OF PUBLIC SAFETY, ARCHITECTURAL ACCESS BOARD, "RULES AND REGULATIONS" WHICH APPEAR IN THE CODE OF MASSACHUSETTS REGULATIONS AT 521 CMR 1.00 ET SEQ.
29. RECONSTRUCTION OF EXISTING INVERTS IN SEWER MANHOLES WILL BE REQUIRED DUE TO PROPOSED MODIFICATIONS. THE COST FOR THIS WORK WILL BE PAID FOR UNDER SECTION 02658 CONNECTIONS TO AND WORK ON EXISTING SYSTEMS.
30. ALL PIPE SECTIONS SHOWING LENGTHS IN LINEAR FEET ARE TWO-DIMENSIONAL MEASUREMENTS TAKEN FROM CENTER TO CENTER OF EACH ADJOINING MANHOLE. INVERTS ON DRAWINGS WILL GOVERN.
31. INSTALL CONTROLLED DENSITY FILL AT LOCATIONS WHERE NEW PIPES CROSS UNDER EXISTING UTILITIES AS DIRECTED BY THE ENGINEER.
32. PROTECT EXISTING UTILITIES AND STRUCTURES AND REPLACE DAMAGED UTILITIES AT NO COST TO THE OWNER.
33. PERFORM OVEREXCAVATION AS DIRECTED BY THE ENGINEER IN THE FIELD. COMPENSATION WILL BE IN ACCORDANCE WITH THE BID ITEM SPECIFIED IN THE BID FORM (SECTION 00300).
34. THIS CONTRACT REQUIRES WORKING IN LIVE SEWER MANHOLES AND SHALL FOLLOW ALL FEDERAL, STATE AND LOCAL REQUIREMENTS FOR SAFETY WHEN IN CONFINED SPACES. ALSO REFER TO RECOMMENDATIONS IN THE NATIONAL INSTITUTE FOR OCCUPATIONAL SAFETY AND HEALTH PUBLICATION NO. 80-106, "WORKING IN CONFINED SPACES".
35. THE WORK WILL REQUIRE COORDINATION WITH ONGOING WORK BEING PERFORMED BY A CONTRACTOR ENGAGED FOR THE UNIVERSITY OF MASSACHUSETTS LOWELL IN THE DECATUR WEST AREA. WORK BY OTHERS SHOWN ON, BUT NOT LIMITED TO, THE EXTENTS ON DRAWINGS.
35. DIG SAFE NOTIFICATION PHONE NUMBER 888-344-7233.
36. COORDINATE ALL WORK ON OR NEAR RAILROAD WITH PAN AM RAILWAYS FOR FLAGGING SUPPORT AND INSPECTION SERVICES PRIOR TO THE COMMENCEMENT OF PROJECT.

LEGEND

NEW

- NEW SEWER PIPE
- NEW DRAINAGE PIPE AND WYE CONNECTION
- NEW SEWER MANHOLE
- NEW DRAIN MANHOLE
- NEW CATCH BASIN AND LATERAL
- NEW DRAIN BOX CULVERT
- NEW WATER MAIN, FITTINGS AND GATE VALVE
- FENCING
- SILT FENCE AND HAYBALES
- ELECTRICAL DUCT AND HANDHOLE
- PERMANENT EASEMENT
- TEMPORARY CONSTRUCTION EASEMENT
- WORK BY OTHERS
- TP — TEST PIT
- P1, B1 — PROBE AND BORING (NUMBER)

EXISTING

- PROPERTY LINE (PER TAX MAP)
- PICKET OR METAL FENCE
- WOOD FENCE
- GUARD RAIL
- CHAIN LINK FENCE
- RETAINING WALL
- STONE WALL
- 230 — EXISTING CONTOUR (INDEX)
- EXISTING CONTOUR (INTERMEDIATE)

EXISTING

- IP — EXISTING IRON PIPE
- DH — EXISTING DRILL HOLE
- EXISTING STONE BOUND
- MB — EXISTING MAIL BOX
- "TR" — TRAFFIC SIGN
- "CAU" — CAUTION
- "ST" — STOP SIGN
- "STR" — STREET ID SIGN
- "NT" — NO TRUCKS
- "NLT" — NO LEFT TURN
- "ID" — BUSINESS IDENTIFICATION SIGN
- "PP" — PRIVATE PROPERTY
- "LTO" — LEFT TURN ONLY
- "SC" — SLOW CHILDREN PLAYING
- "NTP" — NO TRESPASSING
- "DE" — DEAD END
- "TO" — TENANTS ONLY
- "NP" — NO PARKING
- "LP" — LIMITED TIME PARKING
- "HC" — HANDICAP PARKING
- BENCH MARK
- EXISTING GROUND LIGHT
- EXISTING LIGHT POLE
- OHW — EXISTING TELEPHONE POLE/OVERHEAD WIRES
- EXISTING ELECTRICAL HANDHOLE BOX
- EXISTING ELECTRICAL TRANSFORMER
- W — EXISTING HYDRANT
- S — EXISTING SANITARY MANHOLE
- D — EXISTING STORM WATER MANHOLE
- T — EXISTING TELEPHONE MANHOLE
- E — EXISTING ELECTRICAL MANHOLE/UNDERGROUND DUCT
- W — EXISTING WATER MANHOLE/UNDERGROUND DUCT
- EXISTING SERVICES (GAS, WATER, SEWER, DRAIN)
- EXISTING MISCELLANEOUS MANHOLE
- P — EXISTING POST
- EXISTING CATCH BASIN
- W — EXISTING WATER GATE VALVE
- PIV — POST INDICATOR VALVE
- ICV — IRRIGATION CONTROL VALVE
- G — EXISTING GAS GATE VALVE
- DECIDUOUS TREE
- CONIFEROUS TREE

ABBREVIATIONS

S	SANITARY SEWER
D	STORM DRAIN
W	WATER
G	GAS
E	UNDERGROUND ELECTRIC
T	UNDERGROUND TELEPHONE
FM	FORCE MAIN
CATV	UNDERGROUND CABLE TELEVISION
OHW	OVERHEAD WIRES
AC	ASBESTOS CEMENT
AK	AKRON (VITRIFIED CLAY)
BM	BENCH MARK
CI	CAST IRON
DI	DUCTILE IRON
RCP	REINFORCED CONCRETE PIPE
PVC	POLYVINYL CHLORIDE
CL	CEMENT LINED
VCP	VITRIFIED CLAY PIPE
PL	PLASTIC PIPE
BS	BARE STEEL (FOR GAS MAINS)
CS	COATED STEEL (FOR GAS MAINS)
HP	HIGH PRESSURE (FOR GAS MAINS)
LP	LOW PRESSURE (FOR GAS MAINS)
INV. EL.	INVERT ELEVATION IN/OUT
Ii	INVERT ELEVATION IN
Io	INVERT ELEVATION OUT
SMH	SEWER MANHOLE
MH	MANHOLE
DMH	DRAIN MANHOLE
GV	GATE VALVE
HDPE	HIGH DENSITY POLYETHYLENE
PE	POLYETHYLENE
MB	MAIL BOX
CB	CATCH BASIN
CMP	CORRUGATED METAL PIPE
TBM	TEMPORARY BENCH MARK
EX.	EXISTING
VGC	VERTICAL GRANITE CURBING
BCC	BITUMINOUS CONCRETE CURBING
PVWK	PAVED WALKWAY
CCWK	CONCRETE WALKWAY
RTWL	RETAINING WALL
CLFC	CHAIN LINK FENCE
PVD	PAVED
CS	CONCRETE STEPS
WS	WOOD STEPS
BK	BRICK
PV	PAVEMENT
CC	CONCRETE
TGT	TOP GAS TRAP
DOM	DOMESTIC WATER SERVICE
FIRE	FIRE SERVICE
MTL	METAL

COMMONWEALTH OF MASSACHUSETTS — JAMES S. DRAKE — CIVIL — REGISTERED PROFESSIONAL ENGINEER

REV. NO.	DATE	DRWN	CHKD	REMARKS

DESIGNED BY: S. CAREY
DRAWN BY: S. CAREY
SHEET CHK'D BY: D. FREEMAN
CROSS CHK'D BY: J. DRAKE
APPROVED BY: J. DRAKE
DATE: APRIL 2015

CDM Smith
670 N. Commercial St
Manchester, NH 03101
Tel: (603) 222-8300

LOWELL REGIONAL WASTEWATER UTILITY
LOWELL, MASSACHUSETTS
DECATUR WEST STORMWATER MANAGEMENT AND MARGINAL SEWER RELIEF PIPE

LEGEND AND GENERAL NOTES

PROJECT NO. 0552-107165
FILE NAME: G002NFLG.DWG
SHEET NO. LGN
0552-80271

XREFs: [CDMS_2436] Images: []
Last saved by: LAVOIESD Time: 3/23/2015 8:30:38 AM
pw:\\docpwapp1:PW_XM1\0552\107165\04 Design Services NM_30%\01 General\10 CADD\G002NFLG.dwg
© 2015 CDM SMITH ALL RIGHTS RESERVED.
REUSE OF DOCUMENTS: THESE DOCUMENTS AND DESIGNS PROVIDED BY PROFESSIONAL SERVICE, INCORPORATED HEREIN, ARE THE PROPERTY OF CDM SMITH AND ARE NOT TO BE USED, IN WHOLE OR PART, FOR ANY OTHER PROJECT WITHOUT THE WRITTEN AUTHORIZATION OF CDM SMITH.

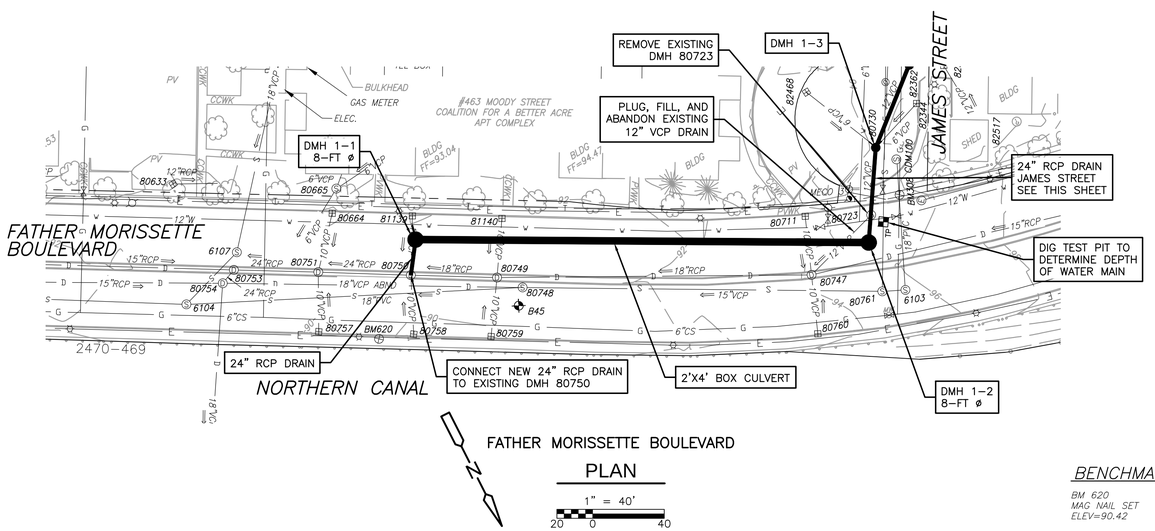

FATHER MORISSETTE BOULEVARD

PLAN

1" = 40'

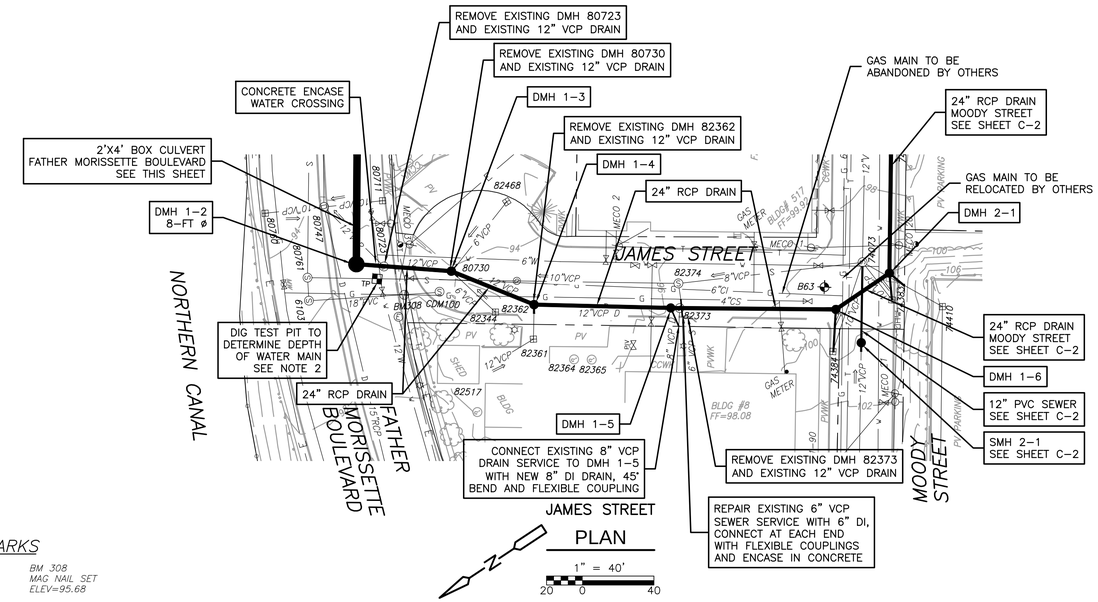

JAMES STREET

PLAN

1" = 40'

BENCHMARKS

BM 620
MAG NAIL SET
ELEV=90.42

BM 308
MAG NAIL SET
ELEV=95.68

NOTES:

1. FOR SCHEDULE OF CATCH BASIN WORK, SEE SHEET D–4 UNLESS OTHERWISE NOTED.
2. IF THERE IS ADEQUATE CLEARANCE BETWEEN EXISTING 12" WATER MAIN AND NEW 24" RCP DRAIN ON FATHER MORISSETTE BOULEVARD THEN RAISE THE INVERT OF THE 24" RCP BETWEEN DMH 1–2 AND DMH 1–3. COORDINATE WITH ENGINEER.

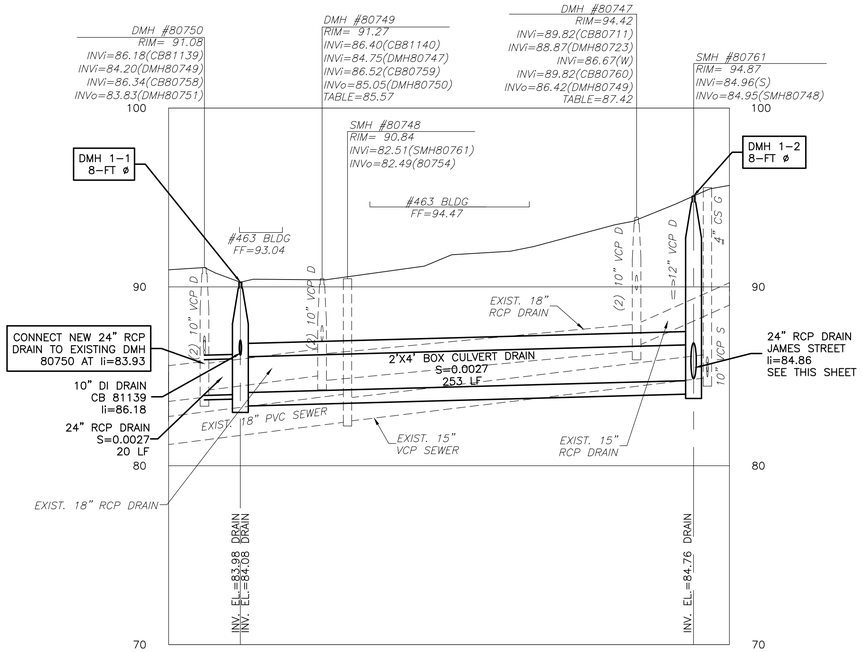

FATHER MORISSETTE BOULEVARD

PROFILE

HOR. 1"=40' – VERT. 1"=4'

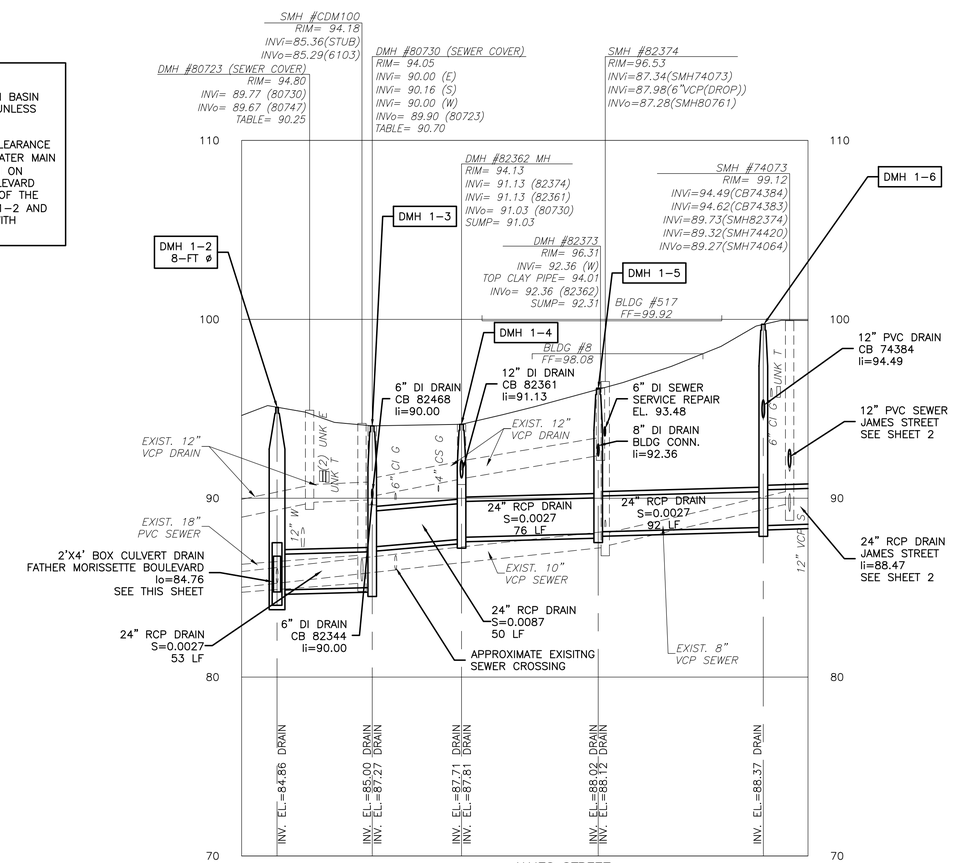

JAMES STREET

PROFILE

HOR. 1"=40' – VERT. 1"=4'

COMMONWEALTH OF MASSACHUSETTS JAMES S. DRAKE CIVIL No. 34364 REGISTERED PROFESSIONAL ENGINEER

REV. NO.	DATE	DRWN	CHKD	REMARKS

DESIGNED BY: S. LAVOIE
DRAWN BY: S. CAREY
SHEET CHK'D BY: D. FREEMAN
CROSS CHK'D BY: J. DRAKE
APPROVED BY: J. DRAKE
DATE: APRIL 2015

CDM Smith
670 N. Commercial St
Manchester, NH 03101
Tel: (603) 222-8300

LOWELL REGIONAL WASTEWATER UTILITY
LOWELL, MASSACHUSETTS

DECATUR WEST STORMWATER MANAGEMENT AND MARGINAL SEWER RELIEF PIPE

FATHER MORISSETTE BOULEVARD AND JAMES STREET

PROJECT NO. 0552–107165
FILE NAME: C001STPP.DWG
SHEET NO.
C-1
0552–80272

XREFs: [CDMS_2436. Conceptual_WP_Jan2015, Borings_2011, 2015 03 10 30055-06 decatur FINAL] Images: []
Last saved by: CAREYSL Time: 3/23/2015 11:44:05 AM
pw:\\cdcpwpp1.PW_XM1\0552\107165\04 Design Services NM_308\02 Civil\10 CADD\01 Working\Conceptual Design\Drawing2.dwg
© 2015 CDM SMITH ALL RIGHTS RESERVED.
REUSE OF DOCUMENTS: THESE DOCUMENTS AND DESIGNS PROVIDED BY PROFESSIONAL SERVICE, INCORPORATED HEREIN, ARE THE PROPERTY OF CDM SMITH AND ARE NOT TO BE USED, IN WHOLE OR PART, FOR ANY OTHER PROJECT WITHOUT THE WRITTEN AUTHORIZATION OF CDM SMITH.

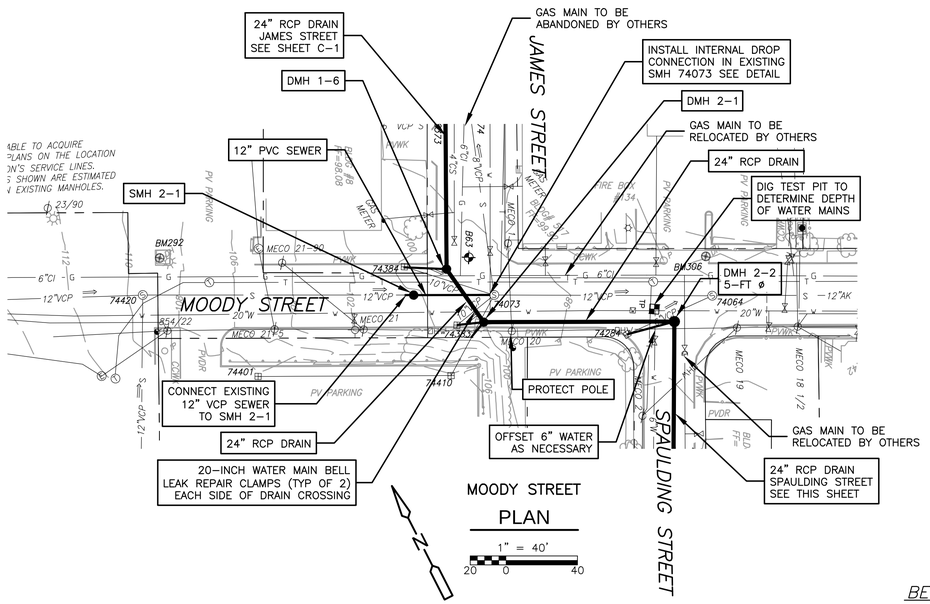

MOODY STREET

PLAN

1" = 40'

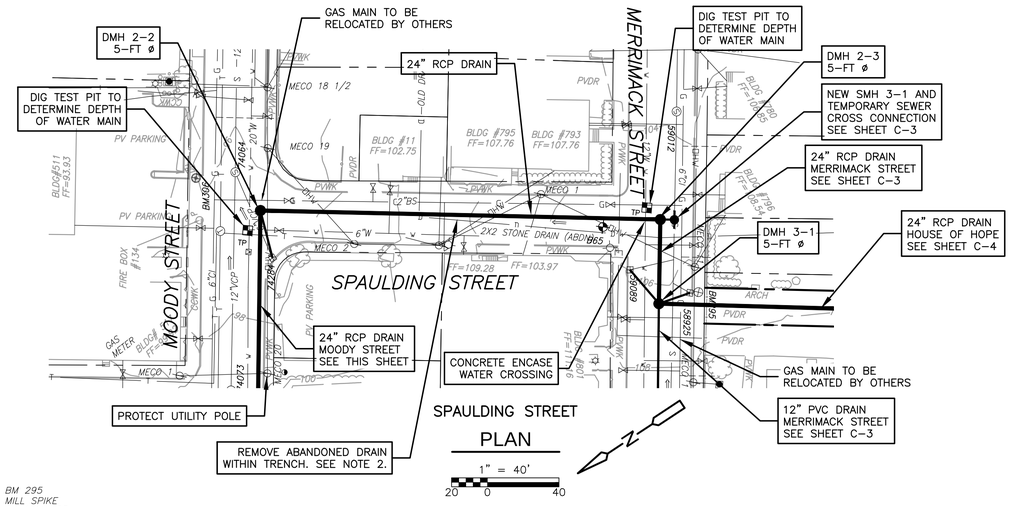

SPAULDING STREET

PLAN

1" = 40'

BENCHMARKS

BM 292	BM 306	BM 295
DRILL HOLE	DRILL HOLE	MILL SPIKE
ELEV=109.43	ELEV=96.10	ELEV=106.83

NOTES:

1. FOR SCHEDULE OF CATCH BASIN WORK, SEE SHEET D-4 UNLESS OTHERWISE NOTED.
2. REMOVE ABANDONED 2'X2' STONE DRAIN, BULKHEAD AND ABANDON AT TRENCH LIMITS AS PER SECTION 02658. EXCAVATE UNSUITABLE MATERIALS AS DETERMINED BY THE ENGINEER.

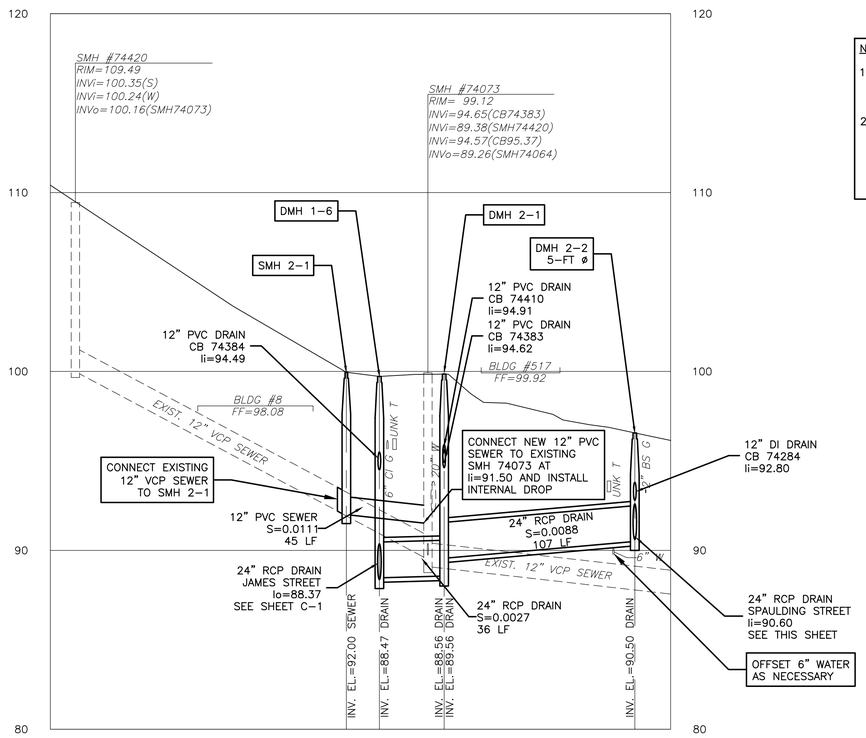

MOODY STREET

PROFILE

HOR. 1"=40' – VERT. 1"=4'

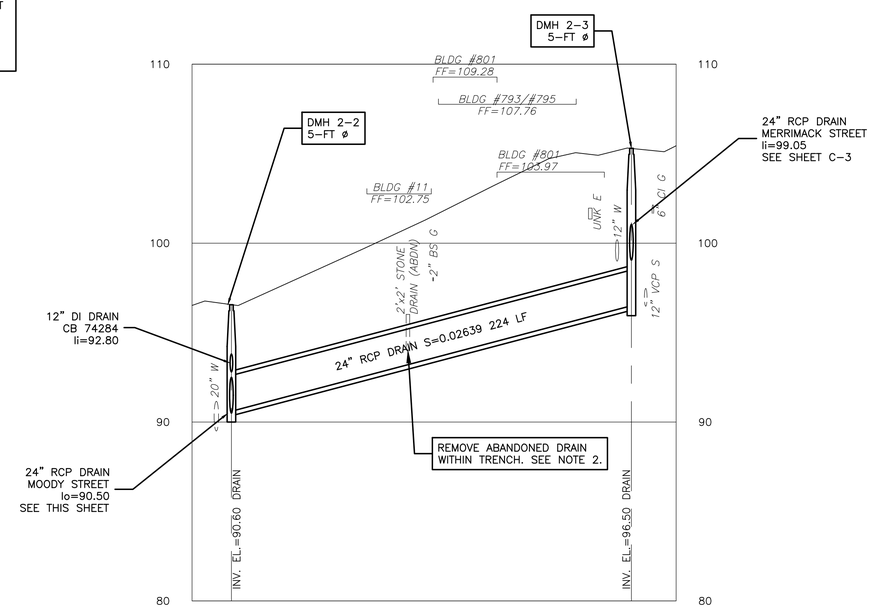

SPAULDING STREET

PROFILE

HOR. 1"=40' – VERT. 1"=4'

COMMONWEALTH OF MASSACHUSETTS JAMES S. DRAKE No. 36338 REGISTERED PROFESSIONAL ENGINEER

REV. NO.	DATE	DRWN	CHKD	REMARKS

DESIGNED BY: S. LAVOIE
DRAWN BY: S. CAREY
SHEET CHK'D BY: D. FREEMAN
CROSS CHK'D BY: J. DRAKE
APPROVED BY: J. DRAKE
DATE: APRIL 2015

CDM Smith
670 N. Commercial St
Manchester, NH 03101
Tel: (603) 222-8300

LOWELL REGIONAL WASTEWATER UTILITY
LOWELL, MASSACHUSETTS

DECATUR WEST STORMWATER MANAGEMENT AND MARGINAL SEWER RELIEF PIPE

MOODY STREET AND SPAULDING STREET

PROJECT NO. 0552-107165
FILE NAME: C002STPP.DWG

SHEET NO.

C-2

0552-80273

XREFs: [Conceptual_WP_Jan2015, CDMS_2436, Borings_2011, 2015 03 10 30055-06 decatur FINAL] Images: []
Last saved by: LAVOIESD Time: 3/23/2015 6:38:09 AM
pw:\\dacpwpp1:PW_XM1\0552\107165\04 Design Services NM_30%\02 Civil\10 CADD\01 Working\Conceptual Design\C002STPP.DWG
© 2015 CDM SMITH ALL RIGHTS RESERVED.
REUSE OF DOCUMENTS: THESE DOCUMENTS AND DESIGNS PROVIDED BY PROFESSIONAL SERVICE, INCORPORATED HEREIN, ARE THE PROPERTY OF CDM SMITH AND ARE NOT TO BE USED, IN WHOLE OR PART, FOR ANY OTHER PROJECT WITHOUT THE WRITTEN AUTHORIZATION OF CDM SMITH.

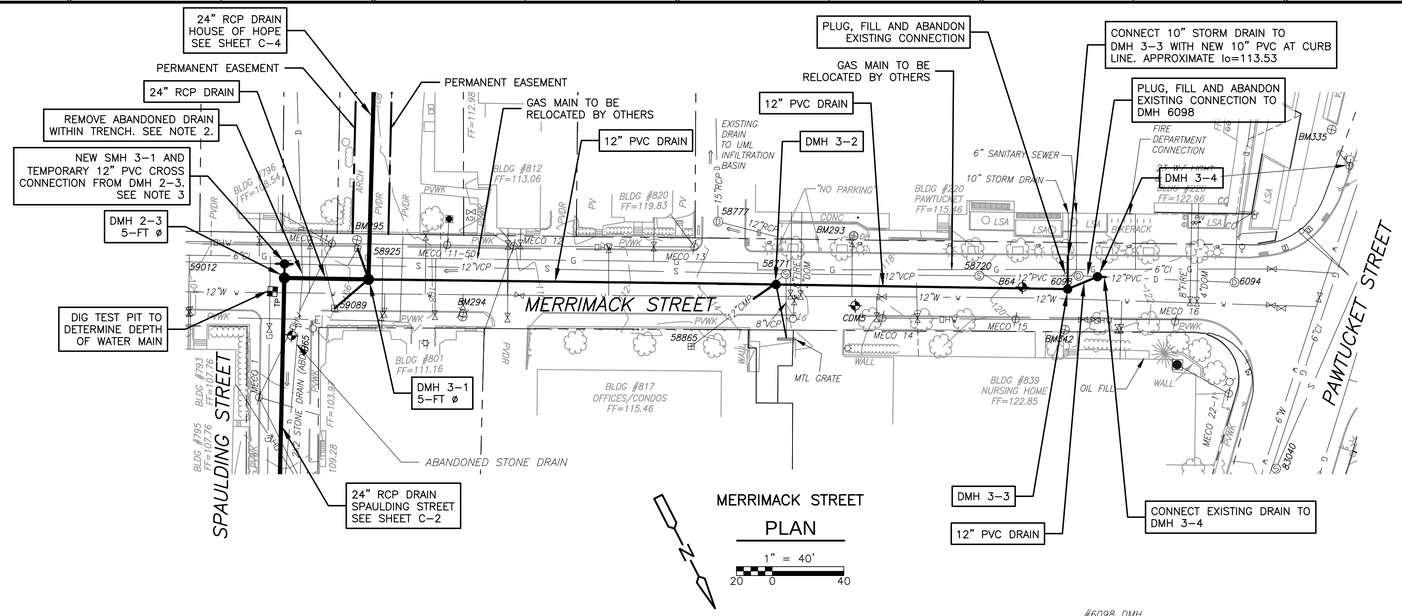

MERRIMACK STREET

PLAN

1" = 40'

20 0 40

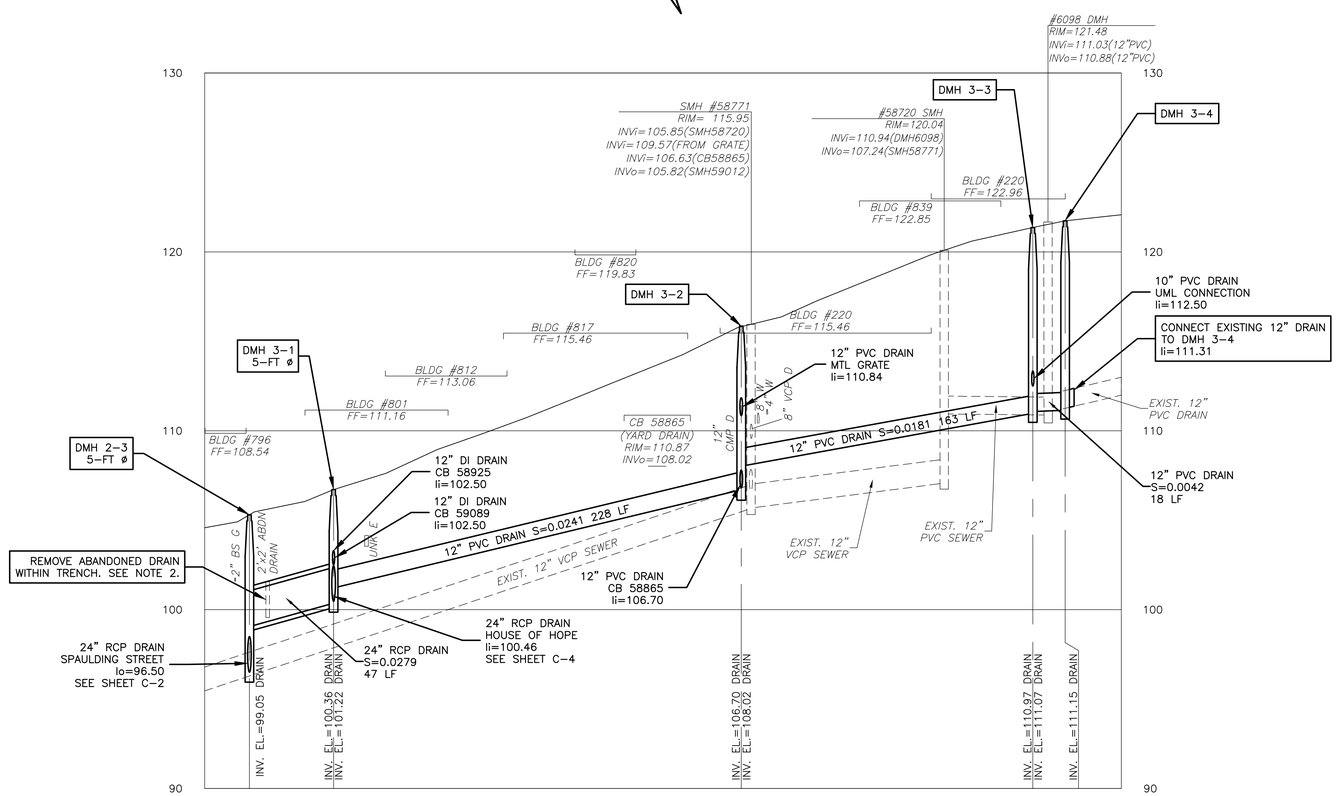

MERRIMACK STREET

PROFILE

HOR. 1"=40' – VERT. 1"=4'

BENCHMARKS

BM 293 DRILL HOLE ELEV=117.50	BM 294 MILL SPIKE ELEV=108.58	BM 295 MILL SPIKE ELEV=106.83
BM 335 DRILL HOLE ELEV=122.66	BM 342 DRILL HOLE ELEV=121.71	

NOTES:

1. FOR SCHEDULE OF CATCH BASIN WORK, SEE SHEET D-4 UNLESS OTHERWISE NOTED.
2. REMOVE ABANDONED 2'X2' STONE DRAIN, BULKHEAD AND ABANDON AT TRENCH LIMITS AS PER SECTION 02658. EXCAVATE UNSUITABLE MATERIALS AS DETERMINED BY THE ENGINEER.
3. TEMPORARY CROSS CONNECTION FROM DRAIN TO SEWER MAY BE NECESSARY DUE TO CONSTRUCTION SCHEDULE. THIS ITEM IS INCLUDED IN MISCELLANEOUS WORK.

COMMONWEALTH OF MASSACHUSETTS
JAMES S. DRAKE
No. 36338
REGISTERED PROFESSIONAL ENGINEER

REV. NO.	DATE	DRWN	CHKD	REMARKS

DESIGNED BY: S. LAVOIE
DRAWN BY: S. CAREY
SHEET CHK'D BY: D. FREEMAN
CROSS CHK'D BY: J. DRAKE
APPROVED BY: J. DRAKE
DATE: APRIL 2015

CDM Smith
670 N. Commercial St
Manchester, NH 03101
Tel: (603) 222-8300

LOWELL REGIONAL WASTEWATER UTILITY
LOWELL, MASSACHUSETTS

DECATUR WEST STORMWATER MANAGEMENT AND MARGINAL SEWER RELIEF PIPE

MERRIMACK STREET

PROJECT NO. 0552-107165
FILE NAME: C003STPP.DWG

SHEET NO.
C-3

0552-80274

XREFs: [Conceptual_WP_Jan2015, CDMS_2436, Borings_Decatur Modified 1-13-15, Borings_2011, 2015 03 10 30055-06 decatur FINAL, TildenBasemap] Images: []
Last saved by: LAVOIESD Time: 3/23/2015 7:44:07 AM
pw:\\dacpwapp1:PW_XM1\0552\107165\04 Design Services NM_308\02 Civil\10 CADD\01 Working\Conceptual Design\C003STPP.DWG
© 2015 CDM SMITH ALL RIGHTS RESERVED.
REUSE OF DOCUMENTS: THESE DOCUMENTS AND DESIGNS PROVIDED BY PROFESSIONAL SERVICE, INCORPORATED HEREIN, ARE THE PROPERTY OF CDM SMITH AND ARE NOT TO BE USED, IN WHOLE OR PART, FOR ANY OTHER PROJECT WITHOUT THE WRITTEN AUTHORIZATION OF CDM SMITH.

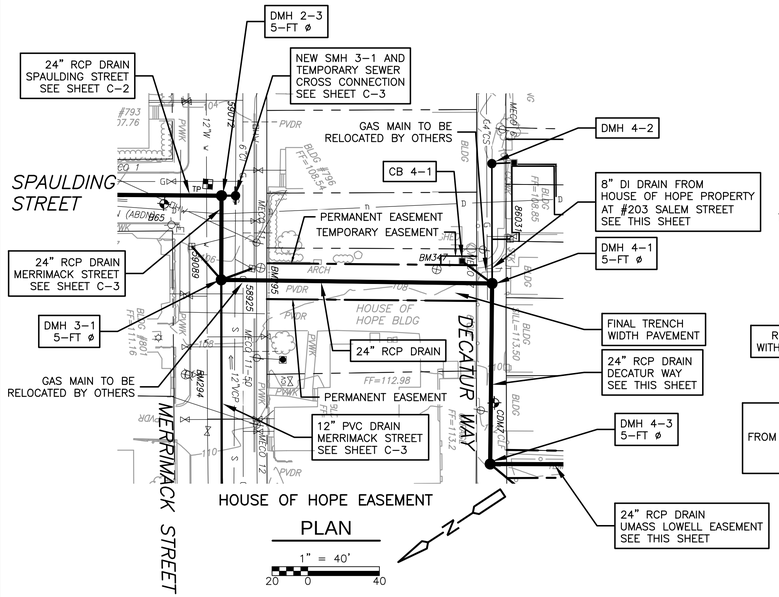

HOUSE OF HOPE EASEMENT

PLAN

1" = 40'

20 0 40

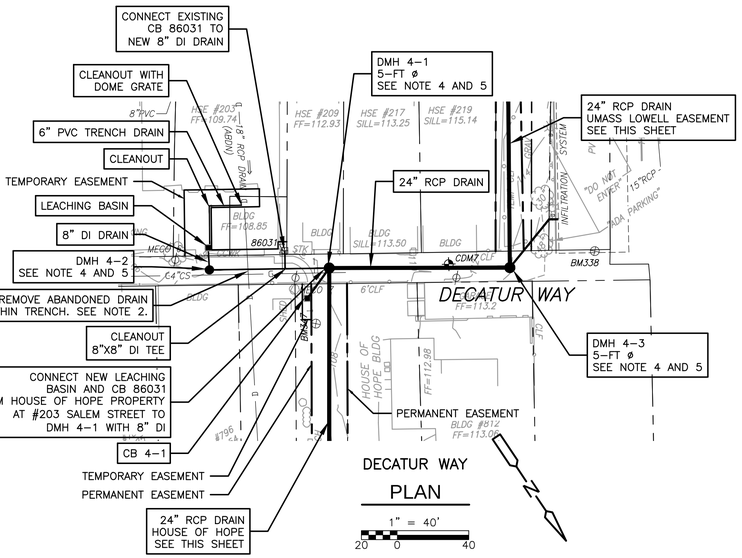

DECATUR WAY

PLAN

1" = 40'

20 0 40

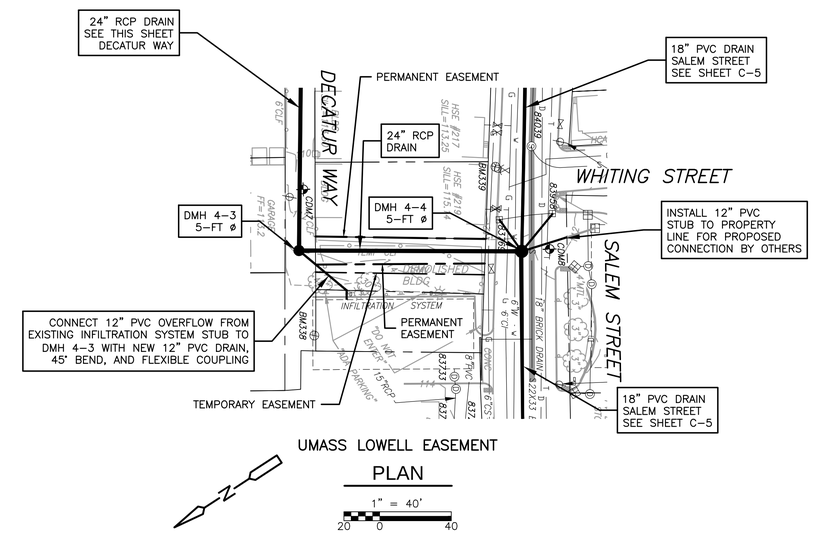

UMASS LOWELL EASEMENT

PLAN

1" = 40'

20 0 40

BENCHMARKS

BM 294 MILL SPIKE ELEV=108.58	BM 295 MILL SPIKE ELEV=106.83	BM 347 MAG NAIL ELEV=107.75
BM 338 MAG NAIL ELEV=114.55	BM 339 MAG NAIL ELEV=111.25	

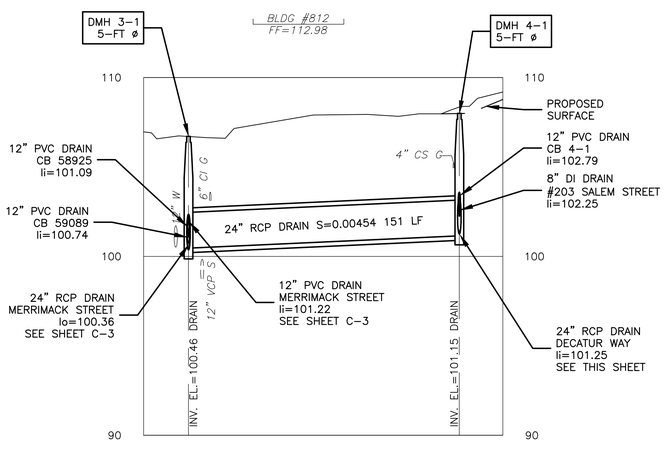

HOUSE OF HOPE EASEMENT

PROFILE

HOR. 1"=40' – VERT. 1"=4'

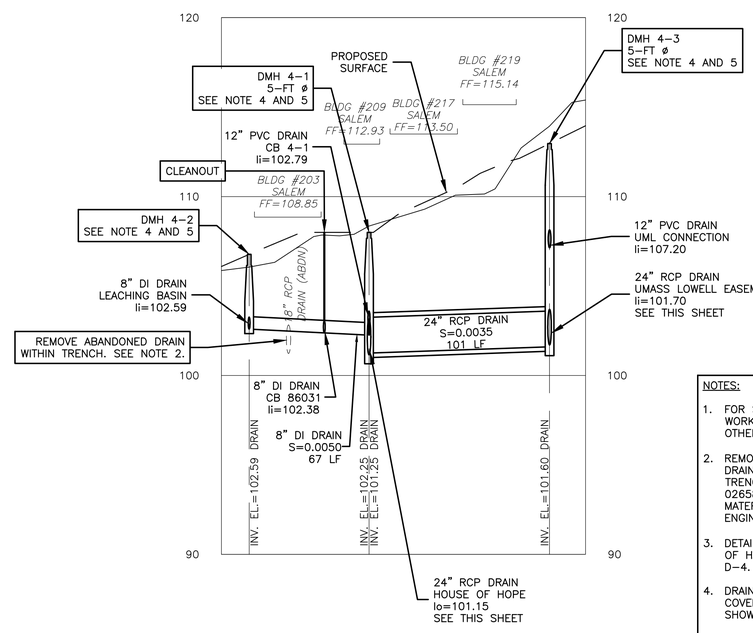

DECATUR WAY

PROFILE

HOR. 1"=40' – VERT. 1"=4'

NOTES:

1. FOR SCHEDULE OF CATCH BASIN WORK, SEE SHEET D-4 UNLESS OTHERWISE NOTED.
2. REMOVE ABANDONED 18" RCP DRAIN, BULKHEAD AND ABANDON AT TRENCH LIMITS AS PER SECTION 02658. EXCAVATE UNSUITABLE MATERIALS AS DETERMINED BY THE ENGINEER.
3. DETAILS RELATED TO #203 HOUSE OF HOPE WORK SHOWN ON SHEET D-4.
4. DRAIN MANHOLE FRAME AND COVERS SHALL BE ON CENTER AS SHOWN ON SHEET L-3.
5. DECATUR WAY 6" PERFORATED PVC PIPE CONNECTED TO DMH 4-1, DMH 4-2 AND DMH 4-3 SHOWN ON SHEETS L-4 AND L-5.

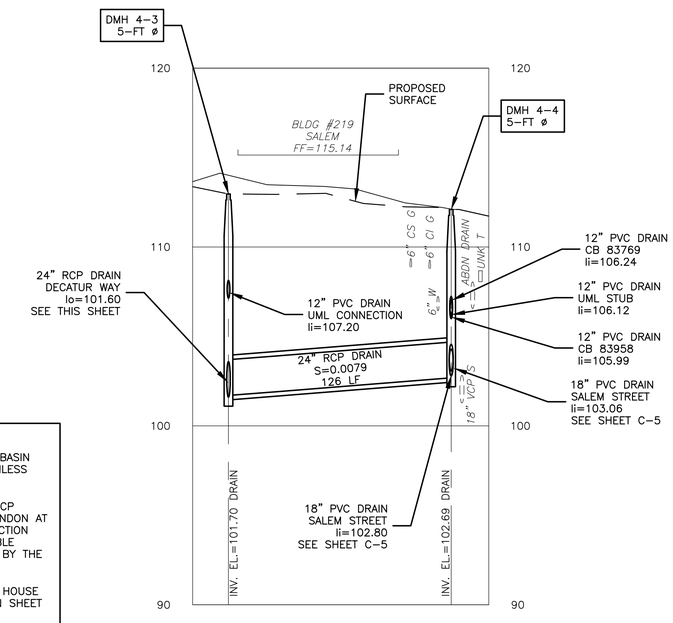

UMASS LOWELL EASEMENT

PROFILE

HOR. 1"=40' – VERT. 1"=4'

COMMONWEALTH OF MASSACHUSETTS
JAMES S. DRAKE
Civil
No. 30958
REGISTERED PROFESSIONAL ENGINEER

REV. NO.	DATE	DRWN	CHKD	REMARKS

DESIGNED BY: S. LAVOIE
DRAWN BY: S. CAREY
SHEET CHK'D BY: D. FREEMAN
CROSS CHK'D BY: J. DRAKE
APPROVED BY: J. DRAKE
DATE: APRIL 2015

CDM Smith
670 N. Commercial St
Manchester, NH 03101
Tel: (603) 222-8300

LOWELL REGIONAL WASTEWATER UTILITY
LOWELL, MASSACHUSETTS
DECATUR WEST STORMWATER MANAGEMENT AND MARGINAL SEWER RELIEF PIPE

HOUSE OF HOPE EASEMENT, UMASS LOWELL EASEMENT AND DECATUR WAY

PROJECT NO. 0552-107165
FILE NAME: C004STPP.DWG
SHEET NO.
C-4
0552-80275

XREFs: [ConceptualWP_Jan2015, CDMS_2436, Borings_2011, 2015 03 10 30055-06 decatur FINAL] Images: []
Last saved by: LAVOIESD Time: 3/23/2015 7:44:25 AM
pw:\\dacpwopp1:PW_XM1\0552\107165\04 Design Services NM_302%\02 Civil\10 CADD\01 Working\Conceptual Design\C004STPP.DWG
© 2015 CDM SMITH ALL RIGHTS RESERVED.
REUSE OF DOCUMENTS: THESE DOCUMENTS AND DESIGNS PROVIDED BY PROFESSIONAL SERVICE, INCORPORATED HEREIN, ARE THE PROPERTY OF CDM SMITH AND ARE NOT TO BE USED, IN WHOLE OR PART, FOR ANY OTHER PROJECT WITHOUT THE WRITTEN AUTHORIZATION OF CDM SMITH.

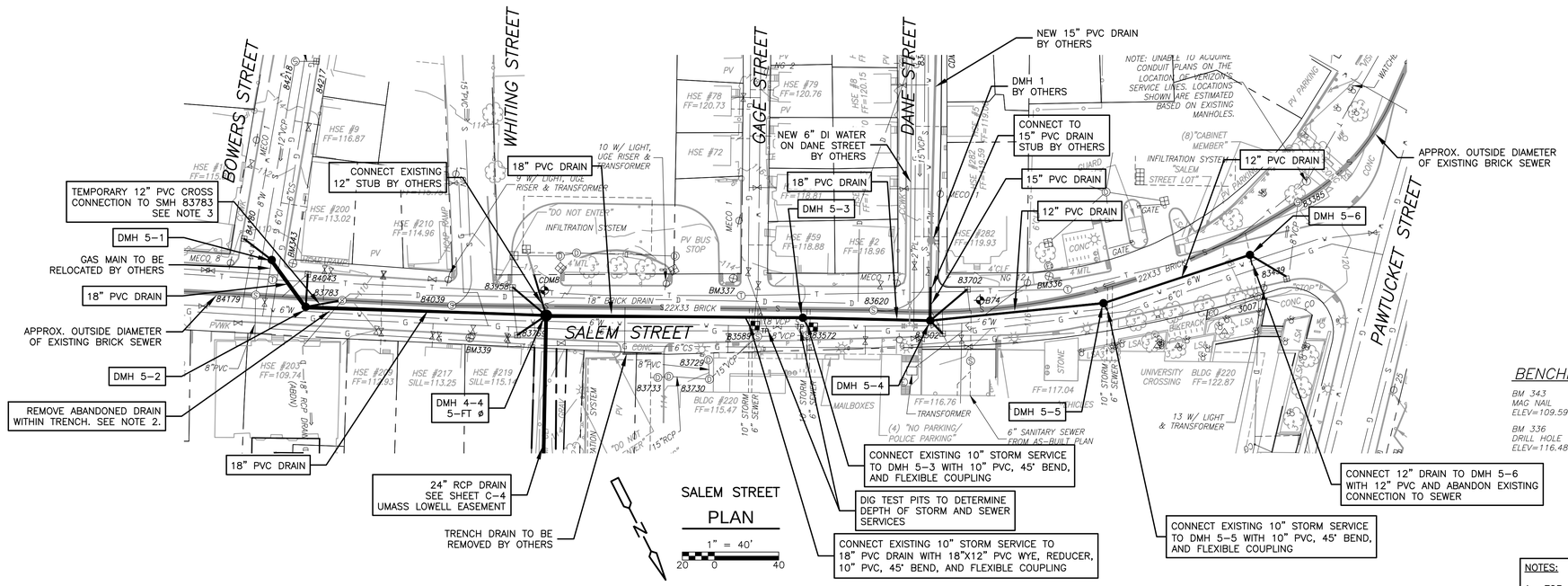

BENCHMARKS

BM 343 MAG NAIL ELEV=109.59	BM 339 MAG NAIL ELEV=111.25	BM 337 DRILL HOLE ELEV=113.57
BM 336 DRILL HOLE ELEV=116.48		

NOTES:

1. FOR SCHEDULE OF CATCH BASIN WORK, SEE SHEET D-4 UNLESS OTHERWISE NOTED.
2. REMOVE ABANDONED 18" RCP/BRICK DRAIN, BULKHEAD AND ABANDON AT TRENCH LIMITS AS PER SECTION 02658. EXCAVATE UNSUITABLE MATERIALS AS DETERMINED BY THE ENGINEER.
3. TEMPORARY CROSS CONNECTION PIPE MAY BE NECESSARY DUE TO CONSTRUCTION SCHEDULE. NUMBER AND LOCATION TO BE COORDINATED WITH ENGINEER. THIS ITEM IS INCLUDED IN MISCELLANEOUS WORK.
4. INVESTIGATE EXISTING SEWER AND DRAIN SERVICES WITH TEST PITS. COORDINATE WITH ENGINEER TO RAISE 18" PVC DRAIN FROM DMH 4-4 TO DMH 5-3 IF POSSIBLE.
5. PLUG, FILL, AND ABANDON ALL RELOCATED DRAIN CONNECTIONS TO EXISTING 22"X33" BRICK SEWER ON SALEM STREET (TYP. OF 5).
6. CONTRACTOR SHALL COORDINATE TRAFFIC MANAGEMENT ALONG SALEM STREET, LOADING DOCK ACCESS AND PEDESTRIAN ACCESS TO UNIVERSITY CROSSING BUILDING TO MINIMIZE DISRUPTIONS TO UML FUNCTIONS. SEE SECTION 00020 SUMMARY OF WORK.

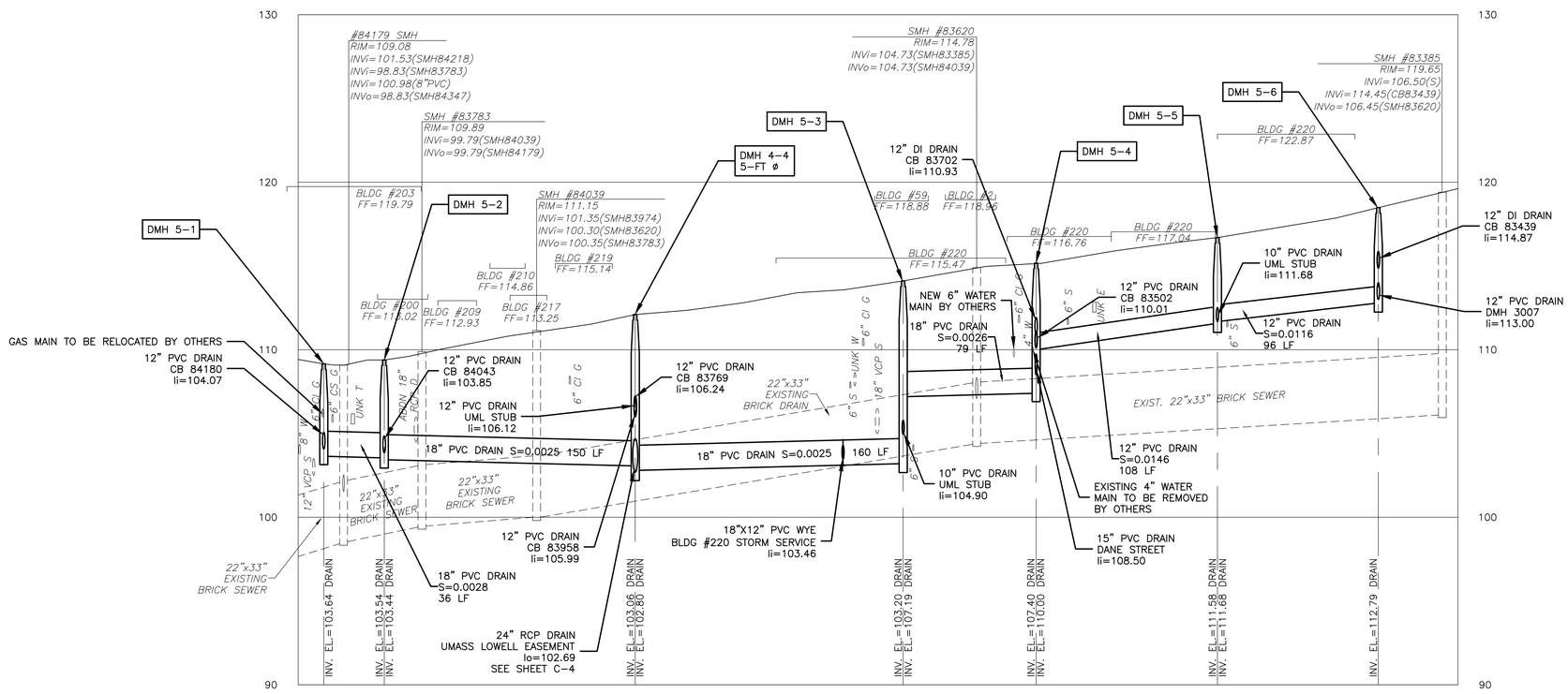

SALEM STREET

PROFILE

HOR. 1"=40' – VERT. 1"=4'

REV. NO.	DATE	DRWN	CHKD	REMARKS

DESIGNED BY: S. LAVOIE
DRAWN BY: S. CAREY
SHEET CHK'D BY: D. FREEMAN
CROSS CHK'D BY: J. DRAKE
APPROVED BY: J. DRAKE
DATE: APRIL 2015

CDM Smith
670 N. Commercial St
Manchester, NH 03101
Tel: (603) 222-8300

LOWELL REGIONAL WASTEWATER UTILITY
LOWELL, MASSACHUSETTS

DECATUR WEST STORMWATER MANAGEMENT AND MARGINAL SEWER RELIEF PIPE

SALEM STREET

PROJECT NO. 0552-107165
FILE NAME: C005STPP.DWG

SHEET NO.
C-5

0552-80276

XREFs: [Conceptual_WP_Jan2015, CDMS_2436, Borings_2011, 2015 03 10 30055-06 decatur FINAL] Images: []
Last saved by: LAVOIESD Time: 3/23/2015 7:45:00 AM
pw:\\dacpwapp1:PW_XM1\0552\107165\04 Design Services NM_30%\02 Civil\10 CADD\01 Working\Conceptual Design\C005STPP.DWG
© 2015 CDM SMITH ALL RIGHTS RESERVED.
REUSE OF DOCUMENTS: THESE DOCUMENTS AND DESIGNS PROVIDED BY PROFESSIONAL SERVICE, INCORPORATED HEREIN, ARE THE PROPERTY OF CDM SMITH AND ARE NOT TO BE USED, IN WHOLE OR PART, FOR ANY OTHER PROJECT WITHOUT THE WRITTEN AUTHORIZATION OF CDM SMITH.

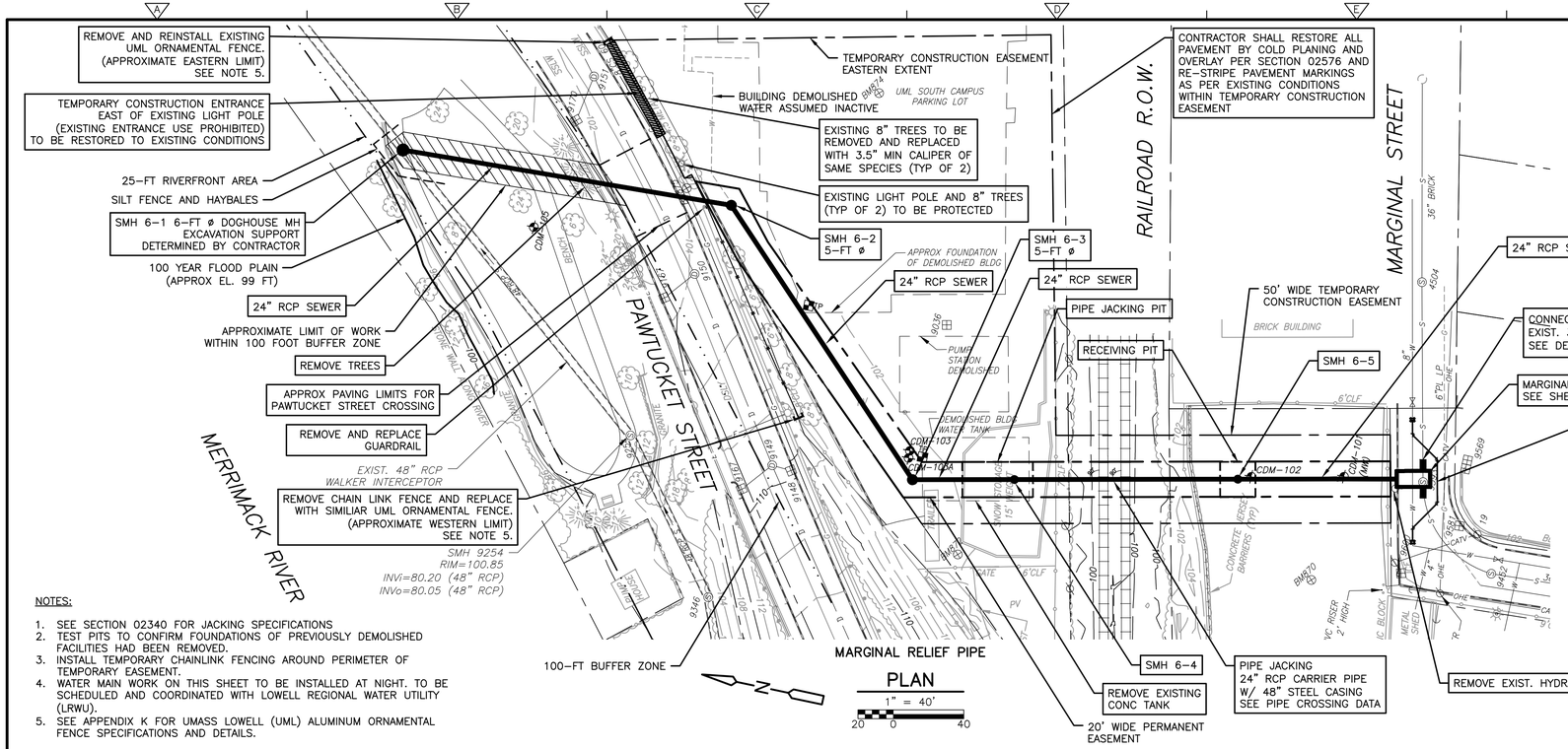

NOTES:

1. SEE SECTION 02340 FOR JACKING SPECIFICATIONS
2. TEST PITS TO CONFIRM FOUNDATIONS OF PREVIOUSLY DEMOLISHED FACILITIES HAD BEEN REMOVED.
3. INSTALL TEMPORARY CHAINLINK FENCING AROUND PERIMETER OF TEMPORARY EASEMENT.
4. WATER MAIN WORK ON THIS SHEET TO BE INSTALLED AT NIGHT. TO BE SCHEDULED AND COORDINATED WITH LOWELL REGIONAL WATER UTILITY (LRWU).
5. SEE APPENDIX K FOR UMASS LOWELL (UML) ALUMINUM ORNAMENTAL FENCE SPECIFICATIONS AND DETAILS.

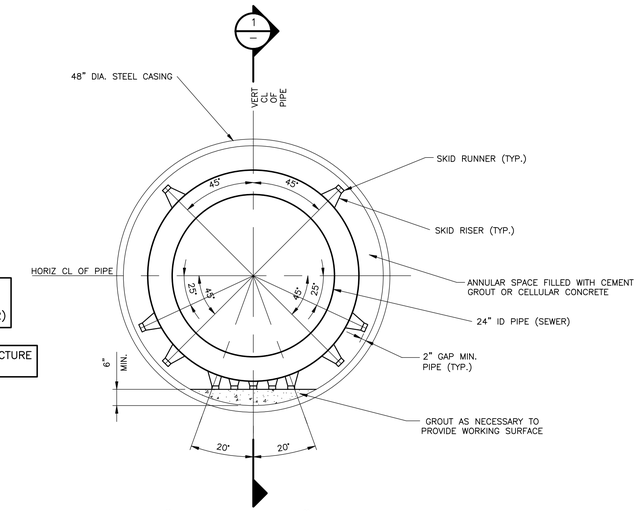

24" SEWER WITH 48" CASING

DETAIL A

NTS

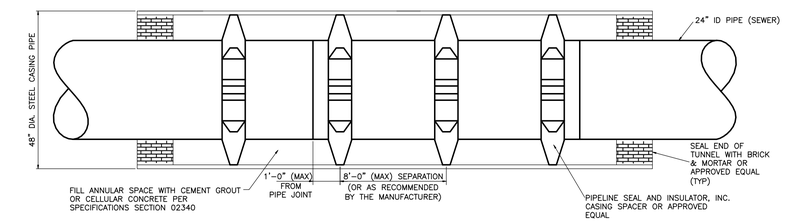

RAILROAD CROSSING

SECTION 1

NTS

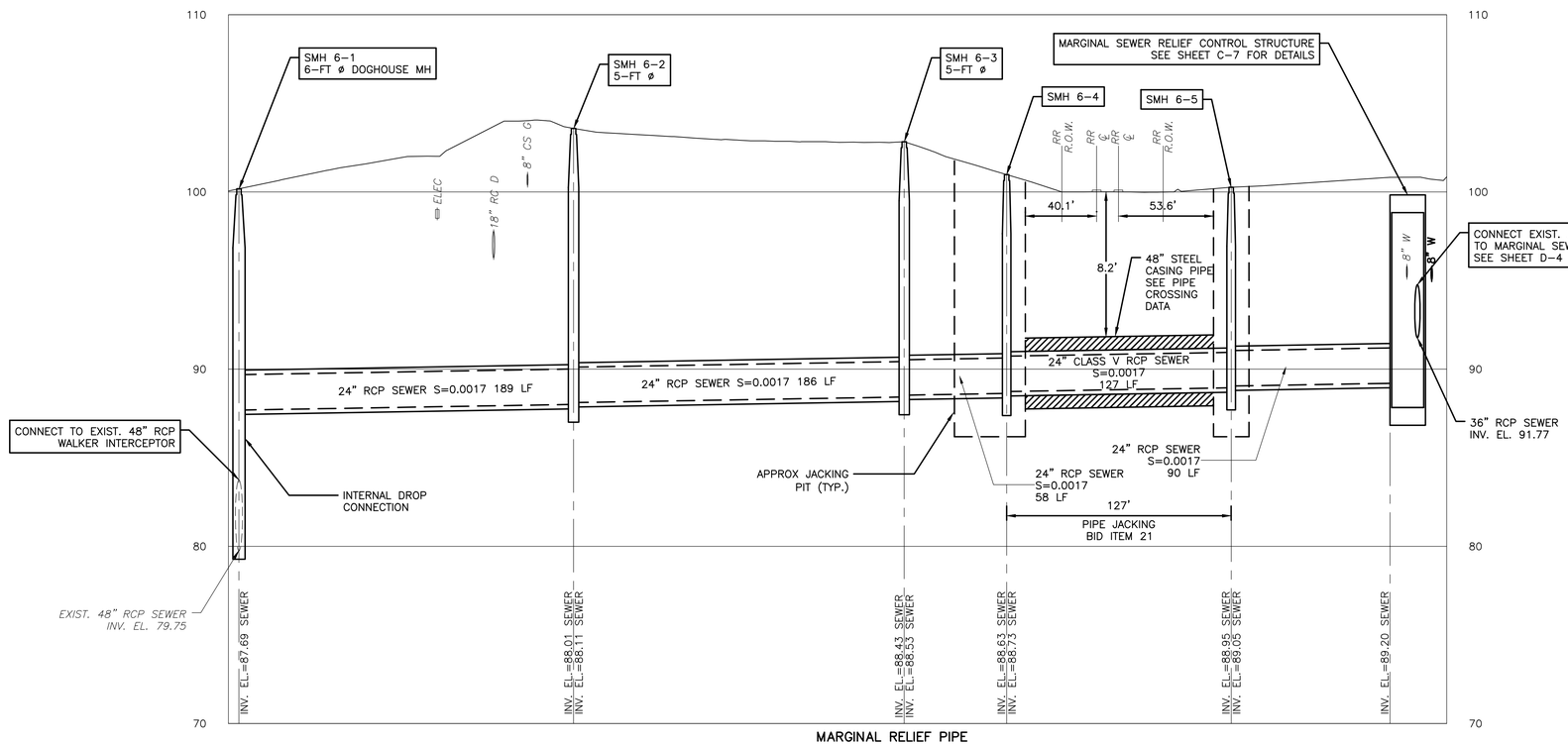

MARGINAL RELIEF PIPE

PROFILE

HOR. 1"=40' – VERT. 1"=4'

PIPE CROSSING DATA

	CARRIER PIPE	CASING PIPE
CONTENTS TO BE HANDLED	SEWERAGE	CARRIER PIPE/SEWERAGE
NORMAL OPERATING PRESSURE	NON-PRESSURE/GRAVITY	–
NORMAL SIZE OF PIPE	24"	48"
OUTSIDE DIAMTER	31.5"	48"
INSIDE DIAMETER	24"	46.621"
WALL THICKNESS	3.75"	0.688" (MIN.)
WEIGHT PER FOOT	366 LBS.	348 LBS.
MATERIAL	REINFORCED CONCRETE	STEEL
PROCESS OF MANUFACTURE	PRECAST	WELDED
SPECIFICATION	ASTM C76 AASHTO M170	ASTM A53
GRADE OR CLASS	CLASS V, WALL C	ASTM A53
TEST PRESSURE	3,750 LBS/FT/FT	35,000 PSI
TYPE OF JOINT	SINGLE-STEP	V-GROOVE/WELDED
TYPE OF COATING	NONE	NONE
DETAILS OF CATHODIC PROTECTION	NONE	NONE
DETAILS OF SEAL OR PROTECTION AT ENDS OF CASING	–	BRICK AND MORTAR
METHOD OF INSTALLATION	JACKING	JACKING
CHARACTER OF SUBSURFACE MATERIAL AT THE CROSSING LOCATION	–	SEE BORINGS
APPROXIMATE GROUND WATER LEVEL	SEE BORINGS	SEE BORINGS
SOURCE OF INFORMATION ON SUB-SURFACE CONDITIONS	BORINGS	BORINGS

COMMONWEALTH OF MASSACHUSETTS JAMES S. DRAKE No. 36368 REGISTERED PROFESSIONAL ENGINEER

REV. NO.	DATE	DRWN	CHKD	REMARKS

DESIGNED BY: S. LAVOIE
DRAWN BY: JTO/SDL
SHEET CHK'D BY: JSD/SDL
CROSS CHK'D BY: D. FREEMAN
APPROVED BY: J. DRAKE
DATE: APRIL 2015

CDM Smith
670 N. Commercial St
Manchester, NH 03101
Tel: (603) 222-8300

LOWELL REGIONAL WASTEWATER UTILITY
LOWELL, MASSACHUSETTS

DECATUR WEST STORMWATER MANAGEMENT AND MARGINAL SEWER RELIEF PIPE

MARGINAL SEWER RELIEF PIPE AND DETAILS

PROJECT NO. 0552-107165
FILE NAME: C006STPP.DWG
SHEET NO.
C-6
0552-80277

XREFs: [CDMS_2436, CWP000ST, CEP000ST] Images: [JAMES S. DRAKE MA PE]
Last saved by: LAVOIESD Time: 3/23/2015 9:28:39 AM
pw:\\dcpwapp1-PW_XM1\0552\107165\04 Design Services NM_302\02 Civil\10 CADD\C007STPP.dwg
©2015 CDM SMITH ALL RIGHTS RESERVED.
REUSE OF DOCUMENTS: THESE DOCUMENTS AND DESIGNS PROVIDED BY PROFESSIONAL SERVICE, INCORPORATED HEREIN, ARE THE PROPERTY OF CDM SMITH AND ARE NOT TO BE USED, IN WHOLE OR PART, FOR ANY OTHER PROJECT WITHOUT THE WRITTEN AUTHORIZATION OF CDM SMITH.

NOTE:
1. DIMENSIONS OF ROOF, WALL, AND FLOOR SLABS ARE APPROXIMATE. CONTRACTOR SHALL MEET THE REQUIREMENTS OF SPECIFICATION SECTION 02650 FOR THE DESIGN OF THE STRUCTURE.
2. PRECAST INTERIOR WALL TO BE DESIGNED TO WITHSTAND WATER OVERTOPPING WALL UP TO THE ROOF SLAB HEIGHT.

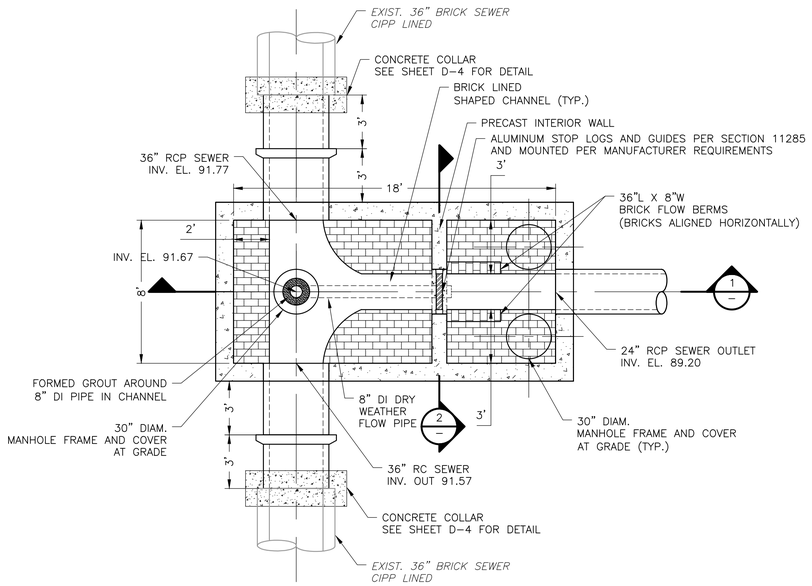

PRECAST MARGINAL SEWER RELIEF CONTROL STRUCTURE BASE

DETAIL A / C-6
1"=4'

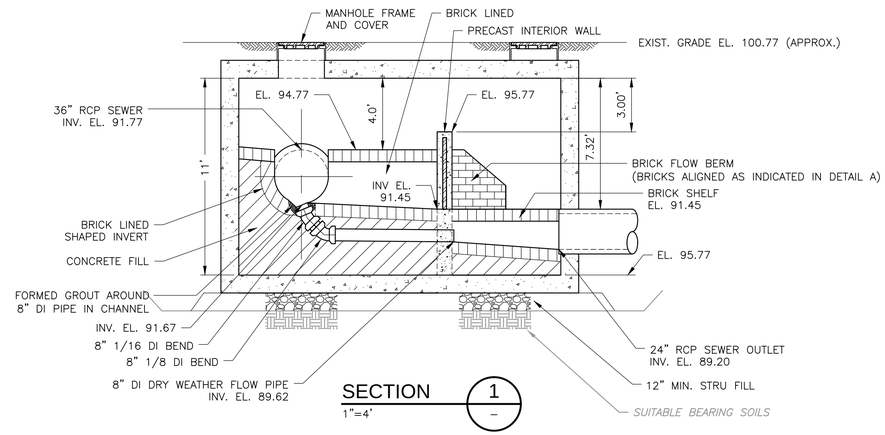

SECTION 1 / –
1"=4'

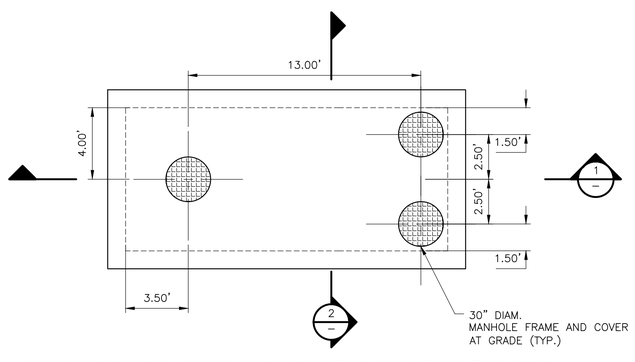

PRECAST MARGINAL SEWER RELIEF CONTROL STRUCTURE TOP SLAB

DETAIL B / C-6
1"=4'

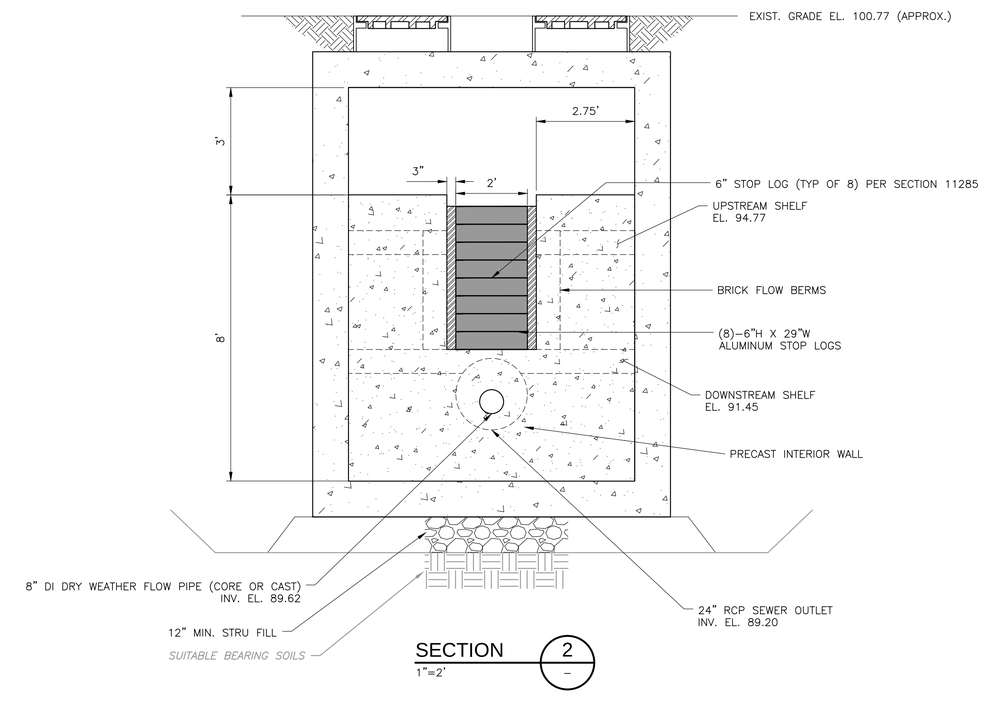

SECTION 2 / –
1"=2'

COMMONWEALTH OF MASSACHUSETTS
JAMES S. DRAKE
CIVIL
No. 38365
REGISTERED PROFESSIONAL ENGINEER

REV. NO.	DATE	DRWN	CHKD	REMARKS

DESIGNED BY: S. LAVOIE
DRAWN BY: JTO/SDL
SHEET CHK'D BY: J. DRAKE
CROSS CHK'D BY: D. FREEMAN
APPROVED BY: J. DRAKE
DATE: APRIL 2015

CDM Smith
670 N. Commercial St
Manchester, NH 03101
Tel: (603) 222-8300

LOWELL REGIONAL WASTEWATER UTILITY
LOWELL, MASSACHUSETTS
DECATUR WEST STORMWATER MANAGEMENT AND MARGINAL SEWER RELIEF PIPE

MARGINAL SEWER RELIEF CONTROL STRUCTURE DETAILS

PROJECT NO. 0552-107165
FILE NAME: C007STDT.DWG
SHEET NO. C-7
0552-80278

XREFs: [CWP0005T_CDMS_2436] Images: []
Last saved by: LAVOIESD Time: 3/23/2015 9:28:08 AM
pw:\\cdcpwapp1-PW_XM1\0552\107165\04 Design Services NM_30%\02 Civil\10 CADD\C008STDT.dwg
©2015 CDM SMITH ALL RIGHTS RESERVED
REUSE OF DOCUMENTS: THESE DOCUMENTS AND DESIGNS PROVIDED BY PROFESSIONAL SERVICE, INCORPORATED HEREIN, ARE THE PROPERTY OF CDM SMITH AND ARE NOT TO BE USED, IN WHOLE OR PART, FOR ANY OTHER PROJECT WITHOUT THE WRITTEN AUTHORIZATION OF CDM SMITH.

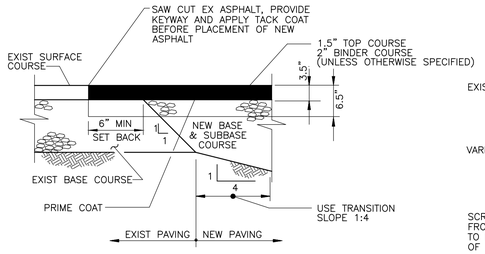

PAVEMENT TRANSITION BETWEEN NEW AND EXISTING ASPHALT PAVEMENTS

DETAIL
NTS

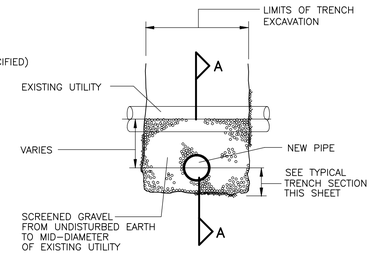

TYPICAL SECTION

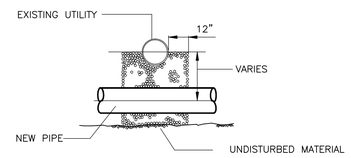

SECT A–A

UTILITY CROSSING

DETAIL
NTS

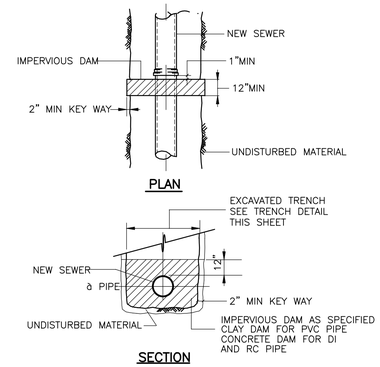

PLAN

SECTION

PIPE TRENCH DAM

DETAIL
NTS

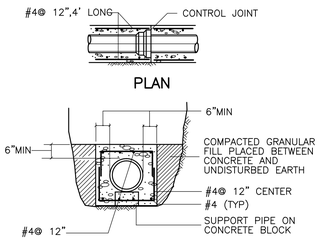

PLAN

SECTION

NOTES:

1. CONTROL JOINTS AND PIPE JOINTS FOR ARCHES, AND ENCASEMENT SHALL COINCIDE FOR SPACING. MAX.DISTANCE BETWEEN CONTROL JOINTS SHALL BE 24' +/–
2. REINFORCING STEEL TO BE USED ONLY WHEN DEPTH OF COVER TO TOP OF SURFACE OF CONCRETE IS 5' –0" OR LESS

CONCRETE PIPE ENCASEMENT

DETAIL
NTS

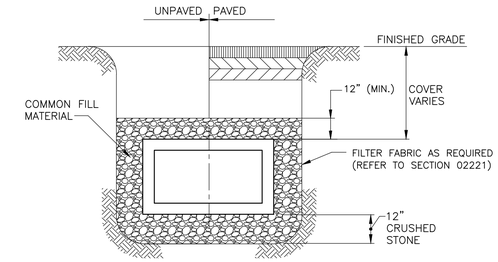

TYPICAL TRENCH DETAIL FOR BOX CULVERTS

DETAIL
NTS

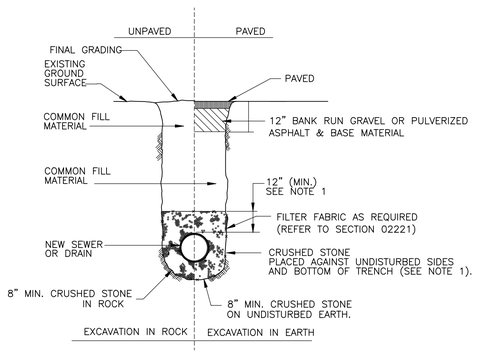

NOTE:

1. FOR PIPES OTHER THAN P.V.C. SELECTED COMMON FILL MAY BE USED FROM MID–DIAMETER OF PIPE TO 12" ABOVE TOP OF PIPE
2. TRENCHES LOCATED ON THE ROAD SHOULDER SHALL BE TREATED THE SAME AS STREET TRENCHES EXCEPT FOR PAVING.
3. PROVIDE AT LEAST ONE IMPERVIOUS DAM IN STONE BEDDING BETWEEN EACH MANHOLE OR EVERY 300 FT. WHICHEVER IS LESS. SEE DETAIL THIS SHEET

TYPICAL TRENCH

DETAIL
NTS

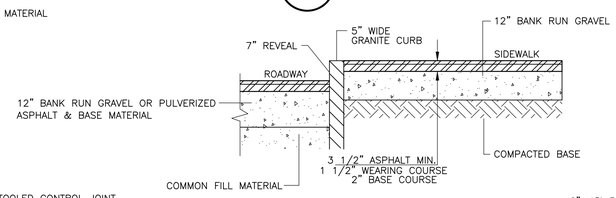

TYPICAL BITUMINOUS SIDEWALK DETAIL

DETAIL
NTS

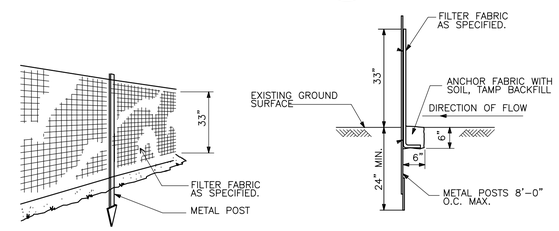

SILT FENCE

DETAIL
NTS

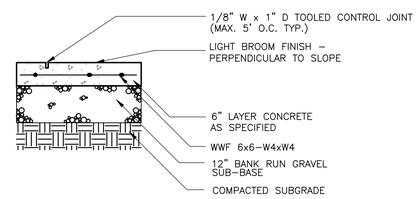

CONCRETE WALK

DETAIL
NTS

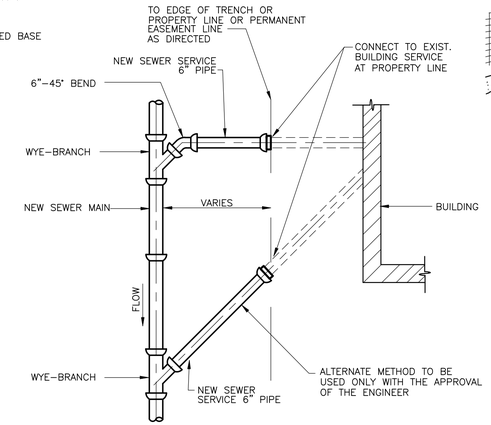

PLAN

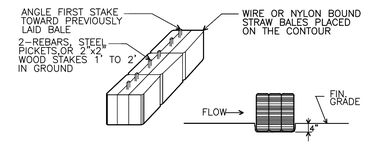

STAKED HAYBALE

DETAIL
NTS

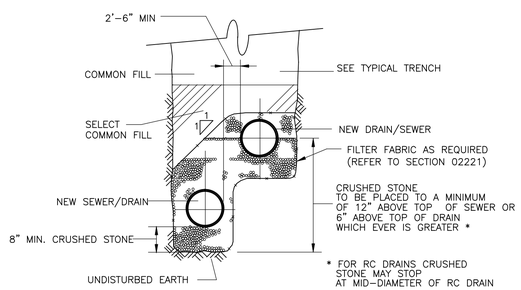

CRUSHED STONE SHALL BE USED AS BEDDING FOR EACH PIPE FROM A MINIMUM OF 8 INCHES BELOW THE PIPE TO MID–DIAMETER OF THE PIPE. A SAND CUSHION, COMPACTED IN 12–INCH LAYERS SHALL BE USED FROM MID–DIAMETER TO 12 INCHES MINIMUM OVER EACH PIPE. COMPACT SELECT COMMON FILL MAY BE USED FROM THE TOP OF THE SAND CUSHION OF THE LOWER PIPE TO BOTTOM OF THE CRUSHED STONE BEDDING FOR THE UPPER PIPE.

COMMON TRENCH FOR SEWER AND DRAIN

DETAIL
NTS

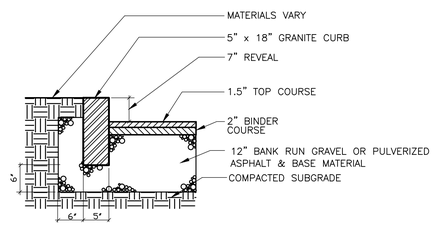

VERTICAL GRANITE CURB

DETAIL
NTS

SIDEWALK NOTES:

1. SIDEWALK CROSS SLOPES, WILL BE 2% MAXIMUM.
2. AN UNOBSTRUCTED PATH OF TRAVEL WITH A MIMINUM WIDTH OF 3 FT SHALL BE MAINTAINED. THE DESIREABLE WIDTH IS 3.25 FT.
3. WHERE THE ROAD PROFILE EXCEEDS 5% THE HIGH SIDE CURB TRANSITION (Lfh) SHALL BE 13 FT.
4. TESTING SURFACE: WHEN TESTING WITH A STRAIGHT EDGE PLACED PARALLEL TO THE LINE OF SLOPE, THERE SHALL BE NO DEVIATION FROM A TRUE SURFACE IN EXCESS OF 1/4 IN.

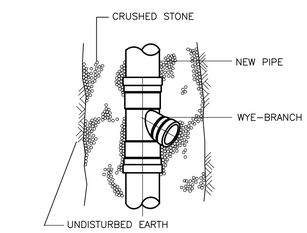

PLAN

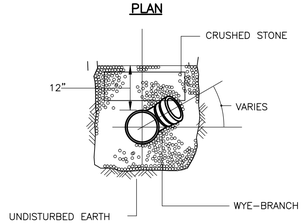

SECTION

PVC WYE BRANCH AND DI TEE

DETAIL
NTS

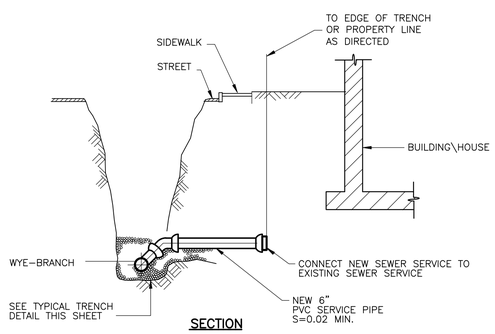

SECTION

SEWER SERVICE CONNECTION

DETAIL
NTS

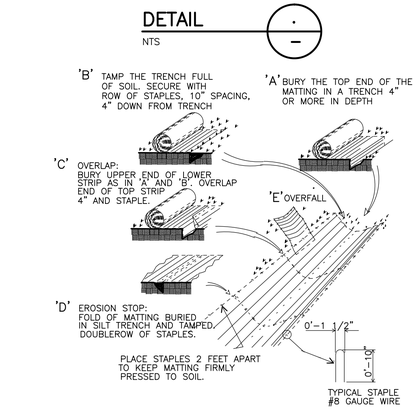

EROSION CONTROL BLANKET

DETAIL
NTS

COMMONWEALTH OF MASSACHUSETTS
JAMES S. DRAKE
CIVIL
No. 34968
REGISTERED PROFESSIONAL ENGINEER

REV. NO.	DATE	DRWN	CHKD	REMARKS

DESIGNED BY: S. CAREY
DRAWN BY: S. CAREY
SHEET CHK'D BY: S. LAVOIE
CROSS CHK'D BY: D. FREEMAN
APPROVED BY: J. DRAKE
DATE: APRIL 2015

CDM Smith
670 N. Commercial St
Manchester, NH 03101
Tel: (603) 222-6300

LOWELL REGIONAL WASTEWATER UTILITY
LOWELL, MASSACHUSETTS
DECATUR WEST STORMWATER MANAGEMENT AND MARGINAL SEWER RELIEF PIPE

MISCELLANEOUS DETAILS I

PROJECT NO. 0552–107165
FILE NAME: C001STDT.DWG
SHEET NO.
D-1
0552–80279

XREFs: [CDMS_2436] Images: []
Last saved by: LAVOIESD Time: 3/20/2015 4:38:11 PM
pw:\\dacpwapp1:PW_XM1\0552\107165\04 Design Services NM_30%\02 Civil\10 CADD\02 Details\C002STDT.dwg
©2015 CDM SMITH ALL RIGHTS RESERVED.
REUSE OF DOCUMENTS: THESE DOCUMENTS AND DESIGNS PROVIDED BY PROFESSIONAL SERVICE, INCORPORATED HEREIN, ARE THE PROPERTY OF CDM SMITH AND ARE NOT TO BE USED, IN WHOLE OR PART, FOR ANY OTHER PROJECT WITHOUT THE WRITTEN AUTHORIZATION OF CDM SMITH.

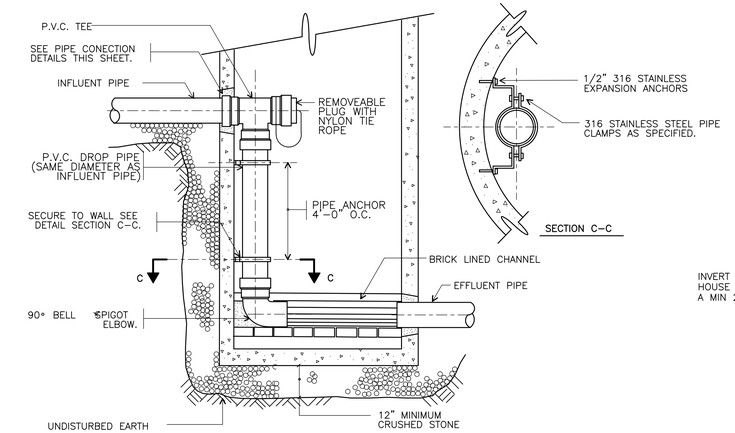

INTERNAL DROP CONNECTION

NOTES:
1. MINIMUM 5'-0" DIAMETER MANHOLES SHALL BE USED AT ALL INTERNAL DROP MANHOLE CONNECTIONS

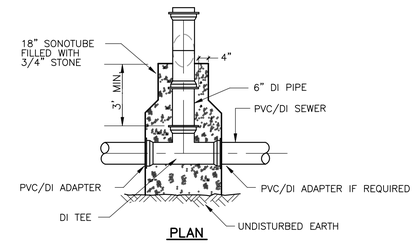

PLAN

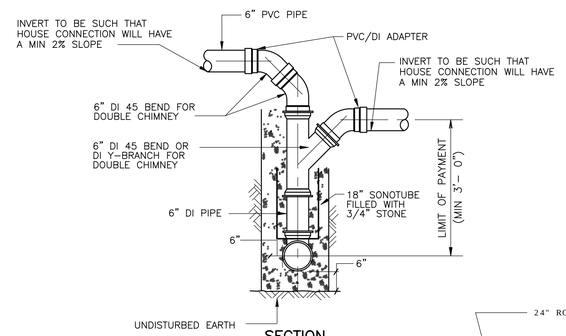

SECTION

CHIMNEY DETAIL

NTS

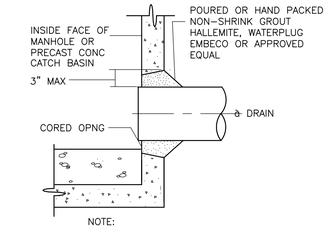

NOTE:
THE CONTRACTOR MAY USE RES-SEAL OR KOR-N-SEAL AT HIS OPTION

MH PIPE CONNECTION FOR EXISTING DRAIN MH AND CATCH BASIN

NTS

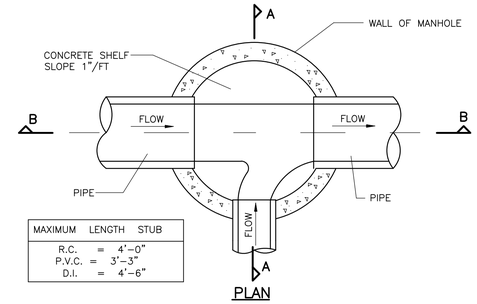

MAXIMUM LENGTH STUB
R.C. = 4'-0"
P.V.C. = 3'-3"
D.I. = 4'-6"

PLAN

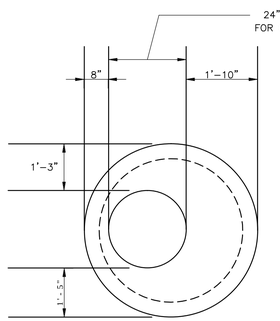

TOP PLAN

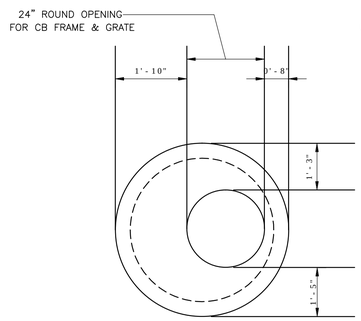

TOP PLAN

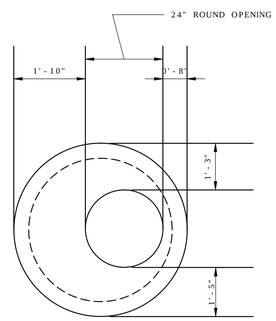

TOP PLAN

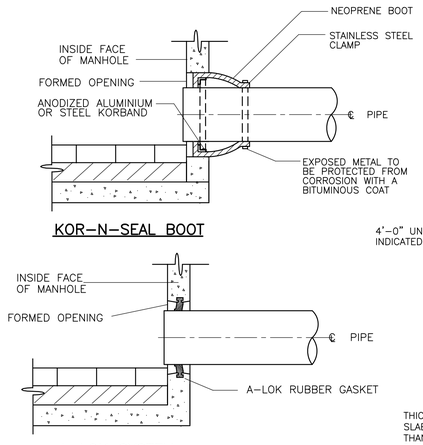

KOR-N-SEAL BOOT

A-LOK SYSTEM

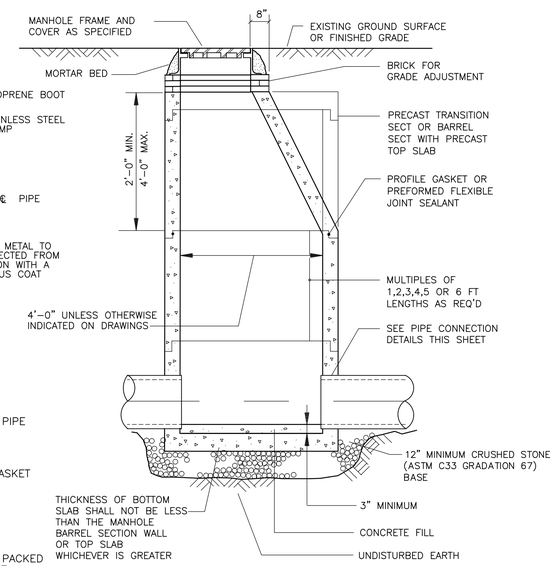

SECTION B-B

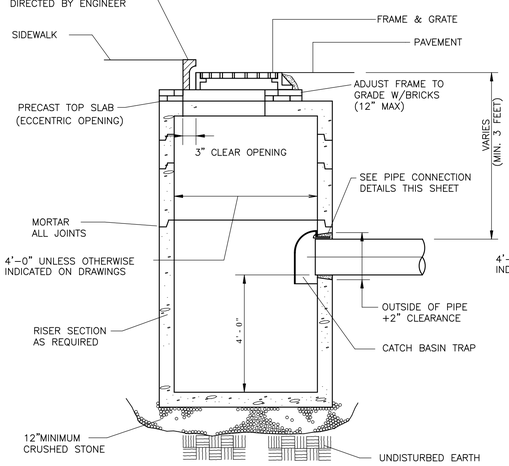

SECTION

PRECAST CATCH BASIN DETAIL TYPE 'A' (W/ CURB REPLACEMENT)

NTS

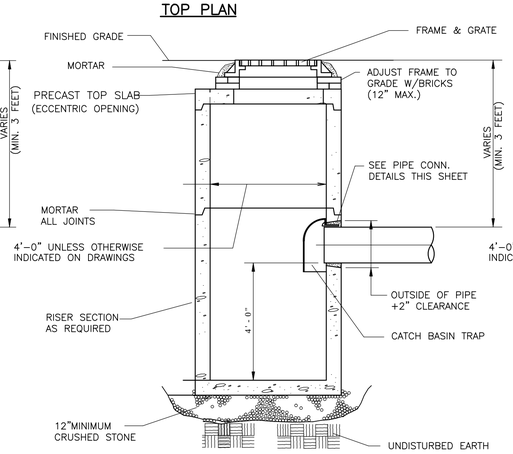

SECTION

PRECAST CATCH BASIN DETAIL TYPE 'B' (NO CURB)

NTS

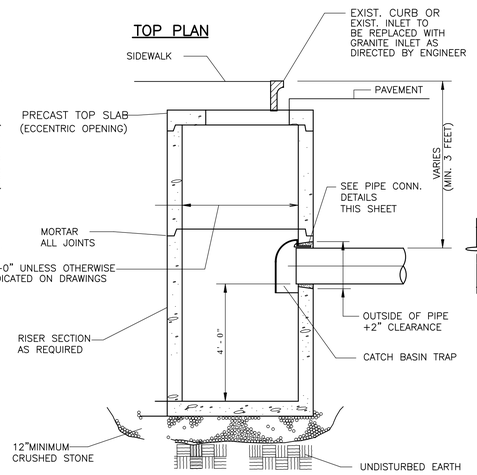

SECTION

PRECAST CATCH BASIN DETAIL TYPE 'C' (NO FRAME AND GRATE)

NTS

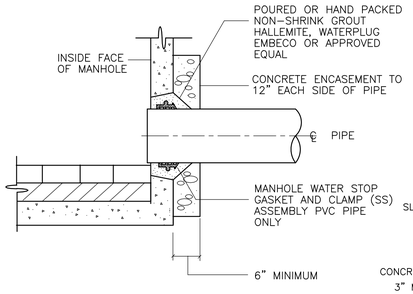

CONCRETE ENCASEMENT

MH PIPE CONNECTIONS FOR SEWER & DRAIN MH

NTS

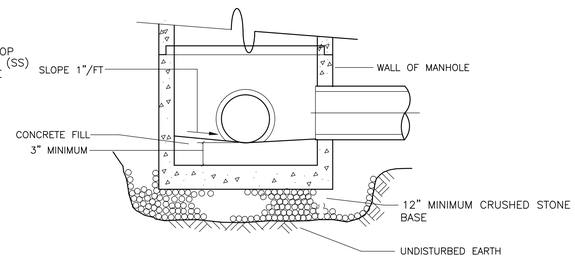

SECTION A-A

PRECAST DRAIN MANHOLE DETAL

NTS

COMMONWEALTH OF MASSACHUSETTS
JAMES S. DRAKE
No. 30368
REGISTERED PROFESSIONAL ENGINEER

REV. NO.	DATE	DRWN	CHKD	REMARKS

DESIGNED BY: S. CAREY
DRAWN BY: S. CAREY
SHEET CHK'D BY: S. LAVOIE
CROSS CHK'D BY: D. FREEMAN
APPROVED BY: J. DRAKE
DATE: APRIL 2015

CDM Smith
670 N. Commercial St
Manchester, NH 03101
Tel: (603) 222-8300

LOWELL REGIONAL WASTEWATER UTILITY
LOWELL, MASSACHUSETTS
DECATUR WEST STORMWATER MANAGEMENT AND MARGINAL SEWER RELIEF PIPE

MISCELLANEOUS DETAILS II

PROJECT NO. 0552-107165
FILE NAME: C002STDT.DWG
SHEET NO.
D-2
0552-80280

XREFs: [CDMS_2436] Images: []
Last saved by: LAVOIESD Time: 3/20/2015 4:38:31 PM
pw:\\docpwapp1:PW_XM1\0552\107165\04 Design Services NM_30%\02 Civil\10 CADD\02 Details\C002STDT.dwg
© 2015 CDM SMITH ALL RIGHTS RESERVED.
REUSE OF DOCUMENTS: THESE DOCUMENTS AND DESIGNS PROVIDED BY PROFESSIONAL SERVICE, INCORPORATED HEREIN, ARE THE PROPERTY OF CDM SMITH AND ARE NOT TO BE USED, IN WHOLE OR PART, FOR ANY OTHER PROJECT WITHOUT THE WRITTEN AUTHORIZATION OF CDM SMITH.

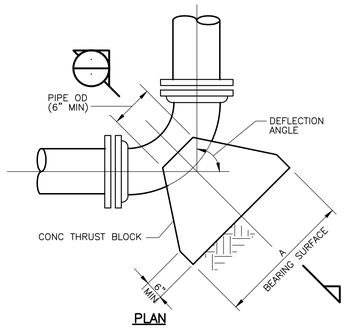

PLAN

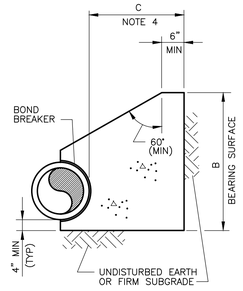

SECTION

THRUST BLOCK FOR HORIZONTAL BENDS

N.T.S.

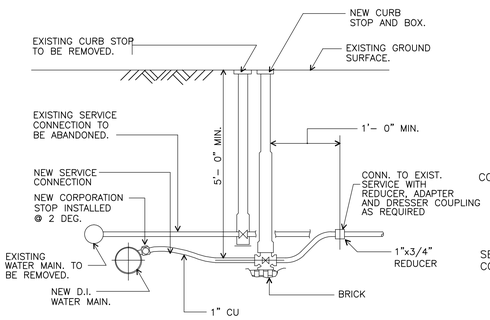

NEW WATER SERVICE CONNECTION DETAIL

N.T.S.

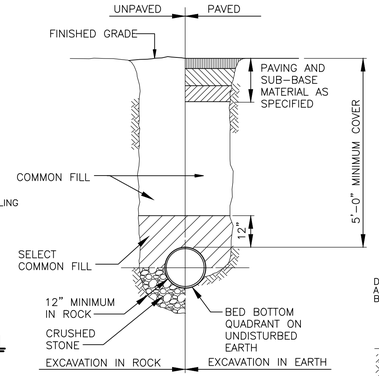

TYPICAL TRENCH DETAIL FOR DI WATER MAIN

NTS

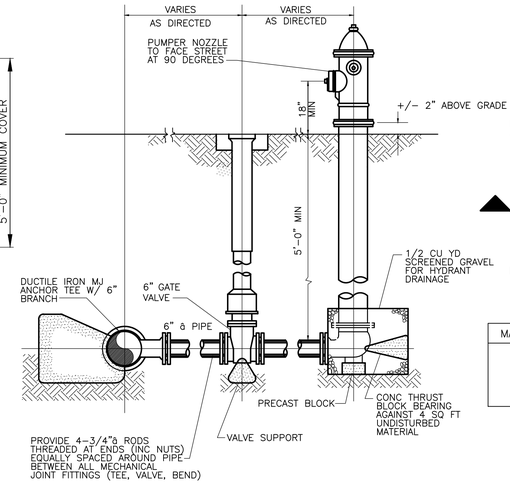

TYPICAL HYDRANT INSTALLATION

N.T.S.

NOTE: CONTRACTOR TO COORDINATE WITH LOWELL REGIONAL WATER UTILITY WHETHER SOME HYDRANT AND HYDRANT GATE VALVES ARE TO REMAIN OR BE REPLACED.

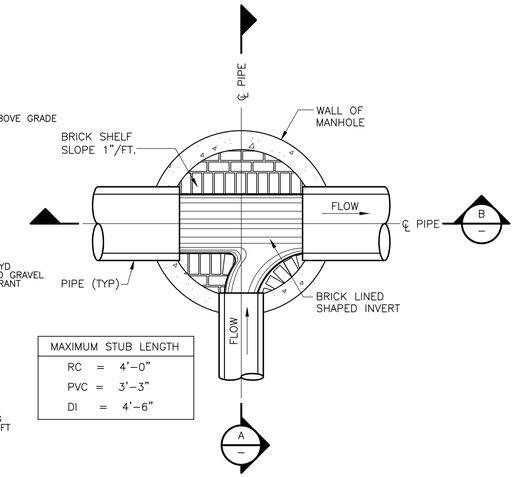

MAXIMUM STUB LENGTH	
RC	= 4'-0"
PVC	= 3'-3"
DI	= 4'-6"

LIMITS OF RESTRAINED JOINTS	
FITTING	MIN. LINEAR FEET TO BE RESTRAINED *
8"x8" TEE	46
8"x6" TEE	28
8"x4" TEE	6
8"-1/4 HOR. BEND	28
8"-1/8 HOR. BEND	12
8"-1/16 HOR. BEND	6
8"-1/8 VER. BEND UP	12
6"-1/8 VER. BEND UP	9
8"-1/8 VER. BEND DOWN	25
6"-1/8 VER. BEND DOWN	19
6"-1/4 HOR. BEND	22
6"-1/8 HOR. BEND	9
6"-1/16 HOR. BEND	4
8"x6" REDUCER	25
8" PLUG/CAP	59
6" PLUG/CAP	46
12"-1/32 HOR. BEND	4
12"-1/16 HOR. BEND	8
12"-1/8 HOR. BEND	16
12"-1/32 VERT. BEND DOWN	8
12"-1/16 VERT. BEND DOWN	17
12"-1/8 VERT. BEND DOWN	35
12"x6" TEE	1
12"x8" TEE	26

* NOTE:
MINIMUM LINEAR FEET OF FORCE MAIN OR WATER MAIN TO BE RESTRAINED ON EACH SIDE OF BENDS AND REDUCERS AND ON THE BRANCH SIDE OF TEES AND FROM PLUGS. AT A MINIMUM ONE JOINT SHALL BE RESTRAINED ON EACH SIDE OF FITTING AND ALONG BRANCH OF TEE.

NOMINAL PIPE SIZE (INCHES)	MAXIMUM PIPE OD (INCHES)	REQUIRED BEARING AREA (SQ FT)					
		90 DEG	60 DEG	45 DEG	30 DEG	22.50 DEG	11.25 DEG
3	3.96	2.0	1.4	1.1	0.7	0.5	0.3
4	4.80	2.9	2.0	1.6	1.1	0.8	0.4
6	6.90	6	4	3	2.2	1.6	0.8
8	9.05	10	7	6	4	3	1.4
10	11.10	15	11	8	6	4	2.1
12	13.20	22	15	12	8	6	3
14	15.30	29	21	16	11	8	4
16	17.40	38	27	20	14	10	5
18	19.50	48	34	26	17	13	7
20	21.60	58	41	32	21	16	8
24	25.80	83	59	45	30	23	12
30	32.00	128	90	69	47	35	18
36	38.30	183	130	99	67	51	25

NOTES:
1. MAXIMUM TEST PRESURE = 1.5 x 150 PSI
2. MINIMUM ALLOWABLE SOIL BEARING PRESSURE = 2000 PSF
3. BEARING AREA = A x B
4. C SHALL BE GREATER THAN A/2 AND B/2.

THRUST BLOCKS FOR HORIZONTAL BENDS AND LOWER VERTICAL BENDS

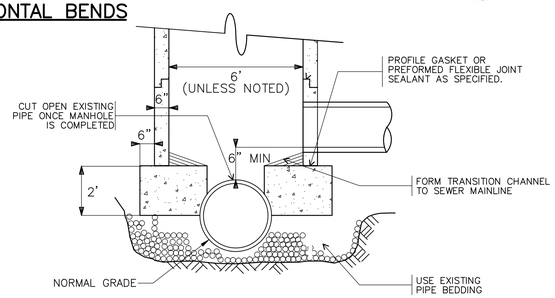

DOG HOUSE MANHOLE BASE

NTS

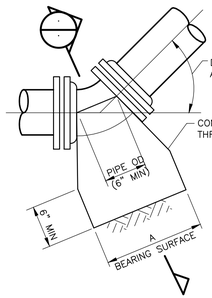

ELEVATION

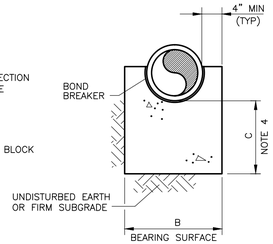

SECTION

THRUST BLOCK FOR LOWER VERTICAL BENDS

N.T.S.

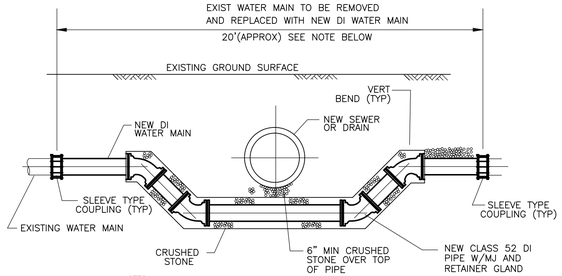

NOTES:

1. EXACT LIMITS OF NEW WATER MAIN TO BE DETERMINED IN THE FIELD.
2. OFFSETS SHOULD BE USED WHEREVER POSSIBLE.
3. ALL VERTICAL BENDS SHALL BE RODDED TOGETHER WITH 3/4-IN STAINLESS STEEL RODS.
4. RESTRAINT SHALL INCLUDE THE APPROPRIATE LENGTH OF EXIST. PIPE ON EITHER SIDE OF THE OFFSET OF EXISTING PIPE, OR THRUST BLOCKS.

WATER MAIN RELOCATION

DETAIL ·

NTS

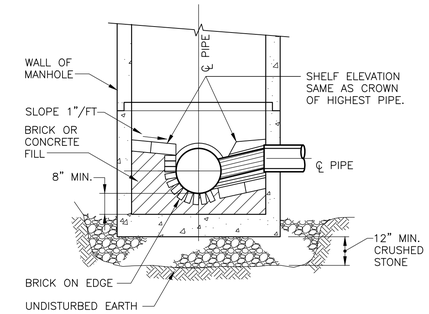

SECTION A-A

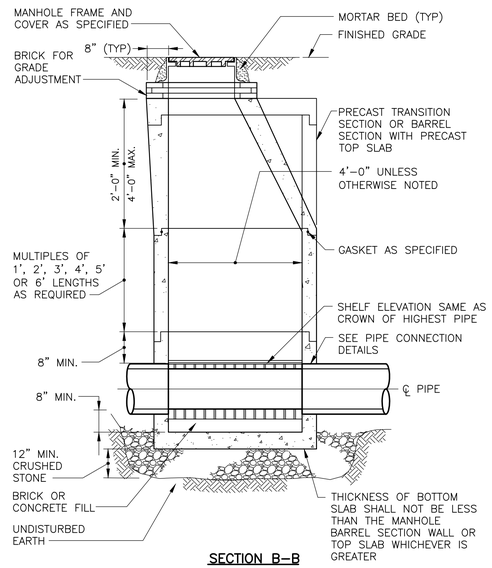

SECTION B-B

TYPICAL PRECAST SEWER MANHOLE

NTS

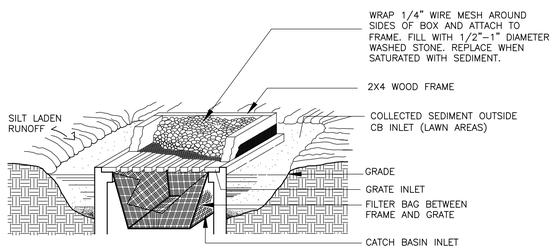

NOTE:
1) IN LAWN AREAS; USE MESH, WOOD FRAME BOX, AND STONE FOR INLET PROTECTION (NO BAG REQUIRED)

2) IN PAVED AREAS, USE FILTER BAG FOR INLET PROTECTION (NO MESH, BOX STONE REQUIRED)

CATCH BASIN FILTER

DETAIL 2

NOT TO SCALE

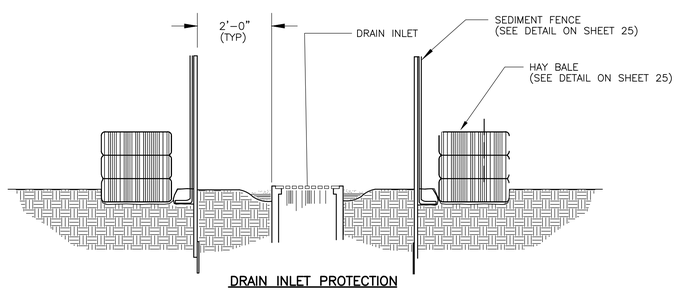

DRAIN INLET PROTECTION

DETAIL 1

NOT TO SCALE

COMMONWEALTH OF MASSACHUSETTS
JAMES S. DRAKE
No. 30808
REGISTERED PROFESSIONAL ENGINEER

REV. NO.	DATE	DRWN	CHKD	REMARKS

DESIGNED BY: S. CAREY
DRAWN BY: S. CAREY
SHEET CHK'D BY: S. LAVOIE
CROSS CHK'D BY: D. FREEMAN
APPROVED BY: J. DRAKE
DATE: APRIL 2015

CDM Smith
670 N. Commercial St
Manchester, NH 03101
Tel: (603) 222-8300

LOWELL REGIONAL WASTEWATER UTILITY
LOWELL, MASSACHUSETTS
DECATUR WEST STORMWATER MANAGEMENT AND MARGINAL SEWER RELIEF PIPE

MISCELLANEOUS DETAILS III

PROJECT NO. 0552-107165
FILE NAME: C003STDT.DWG
SHEET NO.
D-3
0552-80281

XREFs: [CDMS_2436] Images: []
Last saved by: LAVOIESD Time: 3/20/2015 4:38:51 PM
pw:\\docpwapp1:PW_XM1\0552\107165\04 Design Services NM_30%\02 Civil\10 CADD\02 Details\C003STDT.dwg
© 2015 CDM SMITH ALL RIGHTS RESERVED.
REUSE OF DOCUMENTS: THESE DOCUMENTS AND DESIGNS PROVIDED BY PROFESSIONAL SERVICE, INCORPORATED HEREIN, ARE THE PROPERTY OF CDM SMITH AND ARE NOT TO BE USED, IN WHOLE OR PART, FOR ANY OTHER PROJECT WITHOUT THE WRITTEN AUTHORIZATION OF CDM SMITH.

SCHEDULE FOR EXISTING CB WORK

EXISTING CATCH BASIN NUMBER	STREET LOCATION	SHEET NUMBER	SUGGESTED WORK FOR EXISTING CATCH BASIN	CB GRATE TYPE	SUGGESTED WORK FOR EXISTING CATCH BASIN CONNECTION	NEW CB CONNECTION SIZE AND TYPE	LENGTH OF CATCH BASIN CONNECTION	(EXIST.) RIM	NEW INVERT OUT	NEW INVERT IN	CB DETAIL TYPE
81139	FATHER MORISETTE	C-1	EXISTING CB TO REMAIN	-	CONNECT EXISTING CB LATERAL TO DMH 1-1 IN TRENCH AND REMOVE EXISTING PORTION TO INSTALL NEW DRAIN	10" DI	5 LF	89.90	-	86.18	-
82344	JAMES STREET	C-1	EXISTING CB TO REMAIN	-	CONNECT EXISTING CB LATERAL TO DMH 1-3 IN TRENCH	6" DI	5 LF	93.88	-	90.00	-
82468	JAMES STREET	C-1	EXISTING CB TO REMAIN	-	CONNECT EXISTING CB LATERAL TO DMH 1-3 IN TRENCH	6" DI	5 LF	93.15	-	90.00	-
82361	JAMES STREET	C-1	EXISTING CB TO REMAIN	-	CONNECT EXISTING CB LATERAL TO DMH 1-4 IN TRENCH	12" DI	5 LF	94.12	-	91.13	-
74384	MOODY STREET	C-1	EXISTING CB TO REMAIN	-	ABANDON EXISTING CONNECTION CONNECT EXISTING CB TO DMH 1-6	12" PVC	25 LF	99.53	94.62	94.49	-
74383	MOODY STREET	C-2	EXISTING CB TO REMAIN	-	ABANDON EXISTING CONNECTION CONNECT EXISTING CB TO DMH 2-1	12" PVC	14 LF	99.18	94.98	94.62	-
74410	MOODY STREET	C-2	EXISTING CB TO REMAIN	-	ABANDON EXISTING CONNECTION CONNECT EXISTING CB LATERAL TO DMH 2-1 AT PROPERTY LINE	12" PVC	12 LF	108.36	-	94.91	-
74284	MOODY STREET	C-2	EXISTING CB TO REMAIN	-	ABANDON EXISTING CONNECTION CONNECT EXISTING CB TO DMH 2-2	12" DI	28 LF	96.71	92.94	92.80	-
58925	MERRIMACK STREET	C-3	EXISTING CB TO REMAIN	-	ABANDON EXISTING CONNECTION CONNECT EXISTING CB TO DMH 3-1	12" DI	18 LF	106.18	102.59	102.50	-
59089	MERRIMACK STREET	C-3	EXISTING CB TO REMAIN	-	ABANDON EXISTING CONNECTION CONNECT EXISTING CB TO DMH 3-1	12" DI	25 LF	105.65	102.63	102.50	-
58865	MERRIMACK STREET	C-3	EXISTING CB TO REMAIN	-	ABANDON EXISTING CONNECTION CONNECT EXISTING CB LATERAL TO DMH 3-2 IN TRENCH	12" PVC	15 LF	110.87	-	106.70	-
MTL GRATE	MERRIMACK STREET	C-3	EXISTING CB TO REMAIN	-	ABANDON EXISTING CONNECTION CONNECT EXISTING CB TO DMH 3-2	12" PVC	30 LF	-	110.99	110.84	-
86031	DECATUR WAY	C-4	EXISTING CB TO REMAIN	-	ABANDON EXISTING CONNECTION CONNECT EXISTING LEACHING BASIN TO 8" DI DRAIN	8" DI	10 LF	107.61	102.43	102.38	-
83769	SALEM STREET	C-4	EXISTING CB TO REMAIN	-	ABANDON EXISTING CONNECTION CONNECT EXISTING CB TO DMH 4-4	12" PVC	22 LF	111.35	106.35	106.24	-
83958	SALEM STREET	C-4	EXISTING CB TO REMAIN	-	ABANDON EXISTING CONNECTION CONNECT EXISTING CB TO DMH 4-4	12" PVC	27 LF	111.13	106.13	105.99	-
84180	BOWERS STREET	C-5	EXISTING CB TO REMAIN	-	ABANDON EXISTING CONNECTION CONNECT NEW CB TO DMH 5-1	12" PVC	22 LF	109.18	104.18	104.07	-
84043	SALEM STREET	C-5	EXISTING CB TO REMAIN	-	ABANDON EXISTING CONNECTION CONNECT NEW CB TO DMH 5-2	12" PVC	20 LF	108.95	103.95	103.85	-
83502	SALEM STREET	C-5	EXISTING CB TO REMAIN	-	ABANDON EXISTING CONNECTION CONNECT NEW CB TO DMH 5-4	12" PVC	11 LF	115.06	110.07	110.01	-
83702	SALEM STREET	C-5	EXISTING CB TO REMAIN	-	ABANDON EXISTING CONNECTION CONNECT NEW CB TO DMH 5-4	12" DI	30 LF	116.07	111.08	110.93	-
83439	SALEM STREET	C-5	EXISTING CB TO REMAIN	-	ABANDON EXISTING CONNECTION CONNECT EXISTING CB TO DMH 5-6	12" DI	26 LF	118.62	115.00	114.87	-

SCHEDULE FOR NEW CB WORK

NEW CATCH BASIN NUMBER	STREET LOCATION	SHEET NUMBER	SUGGESTED WORK FOR NEW CATCH BASIN	CB GRATE TYPE	SUGGESTED WORK FOR NEW CATCH BASIN CONNECTION	NEW CB CONNECTION SIZE AND TYPE	LENGTH OF CATCH BASIN CONNECTION	RIM	INVERT OUT	INVERT IN	CB DETAIL TYPE
CB 4-1	DECATUR WAY	C-4	SEE SHEET 4 FOR CATCH BASIN LOCATION	B	CONNECT TO NEW DMH 4-1	12" PVC	21 LF	107.90	102.90	102.79	B

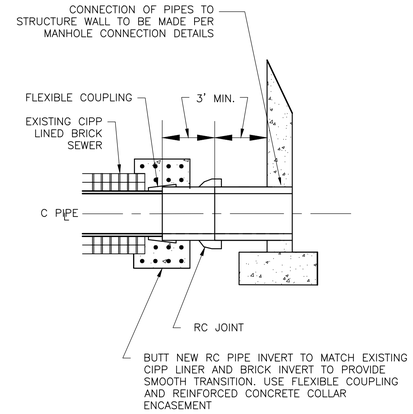

RELIEF STRUCTURE CONNECTION

DETAIL
NTS

NOTES:

1. REMOVE BRICK SEWER UNTIL STRUCTURALLY SOUND TO MAKE CONNECTION WITH CIPP LINER.
2. CLEAR OBSTRUCTIONS FROM INSIDE WALL OF BRICK SEWER
3. MATCH NEW PIPE INVERT WITH EXISTING CIPP LINER AND USE FLEXIBLE COUPLING TO JOIN TWO PIPES.
4. ENCASE JOINT USING REINFORCED CONCRETE PIPE ENCASEMENT DETAIL ON SHEET D-1.

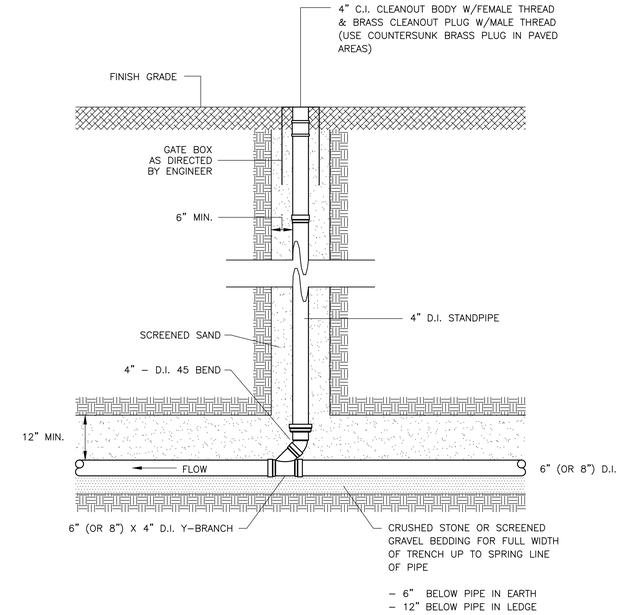

DRAIN CLEANOUT

DETAIL
NTS

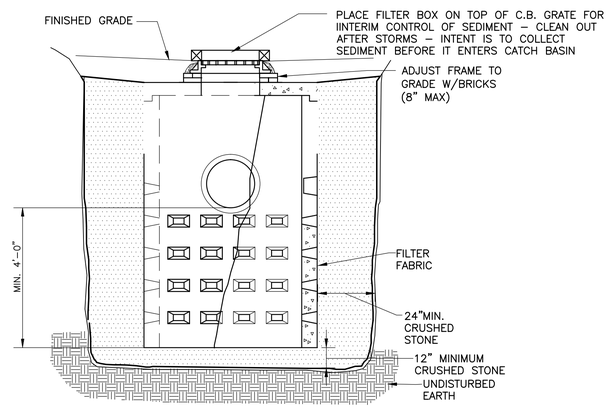

PRECAST CONCRETE LEACHING CATCH BASIN

DETAIL
NTS

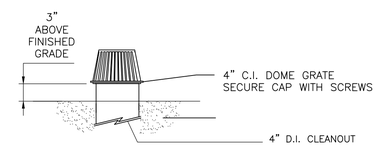

RISER PIPE WITH DOME GRATE

DETAIL
NTS

COMMONWEALTH OF MASSACHUSETTS
JAMES S. DRAKE
CIVIL
No. 36365
REGISTERED PROFESSIONAL ENGINEER

REV. NO.	DATE	DRWN	CHKD	REMARKS

DESIGNED BY: S. CAREY
DRAWN BY: S. CAREY
SHEET CHK'D BY: S. LAVOIE
CROSS CHK'D BY: D. FREEMAN
APPROVED BY: J. DRAKE
DATE: APRIL 2015

CDM Smith
670 N. Commercial St
Manchester, NH 03101
Tel: (603) 222-8300

LOWELL REGIONAL WASTEWATER UTILITY
LOWELL, MASSACHUSETTS

DECATUR WEST STORMWATER MANAGEMENT AND MARGINAL SEWER RELIEF PIPE

MISCELLANEOUS DETAILS IV AND CATCH BASIN SCHEDULE

PROJECT NO. 0552-107165
FILE NAME: C004STDT.DWG
SHEET NO.
D-4
0552-80282

XREFs: [CDMS_2436] Images: []
Last saved by: LAVOIESD Time: 3/23/2015 9:36:37 AM
pw:\\docpwapp1-PW_XM1\0552\107165\04 Design Services NM_302%\02 Civil\10 CADD\02 Details\C004STDT.dwg
© 2015 CDM SMITH ALL RIGHTS RESERVED.
REUSE OF DOCUMENTS: THESE DOCUMENTS AND DESIGNS PROVIDED BY PROFESSIONAL SERVICE, INCORPORATED HEREIN, ARE THE PROPERTY OF CDM SMITH AND ARE NOT TO BE USED, IN WHOLE OR PART, FOR ANY OTHER PROJECT WITHOUT THE WRITTEN AUTHORIZATION OF CDM SMITH.

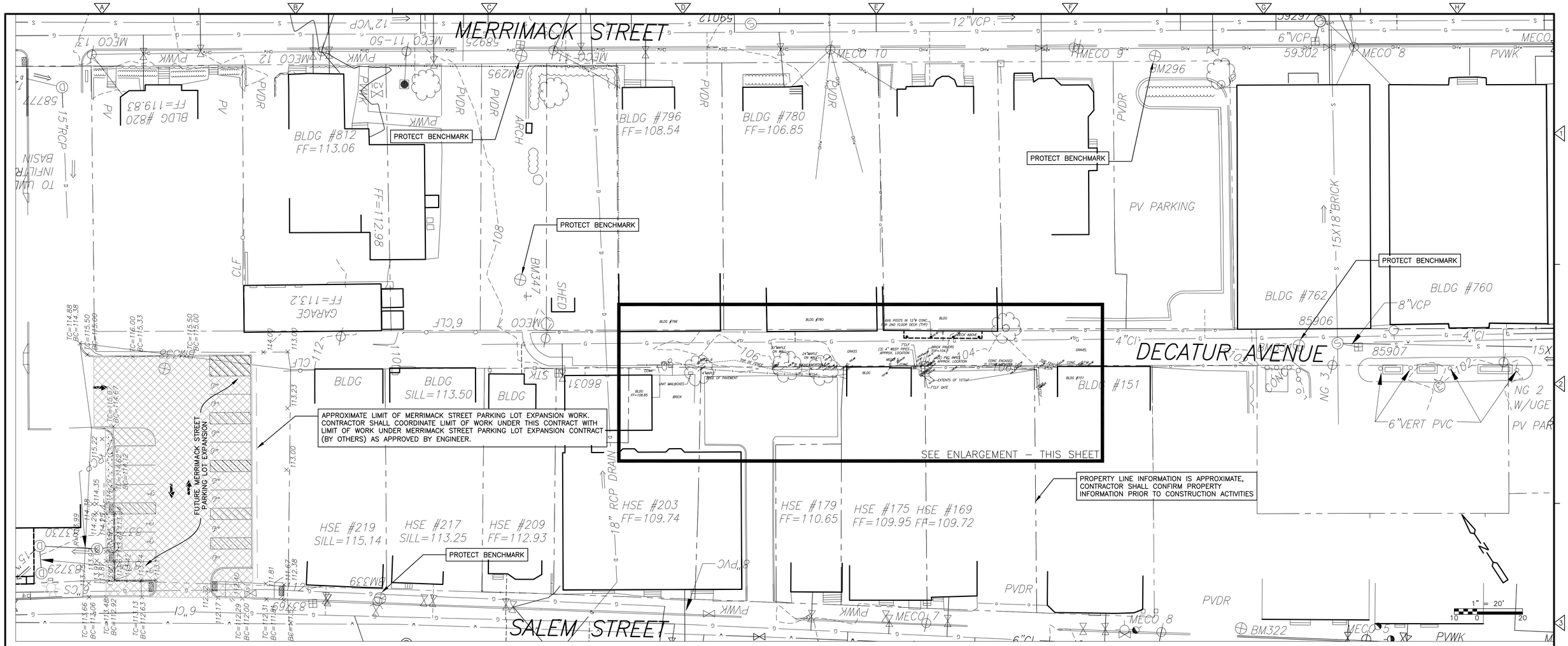

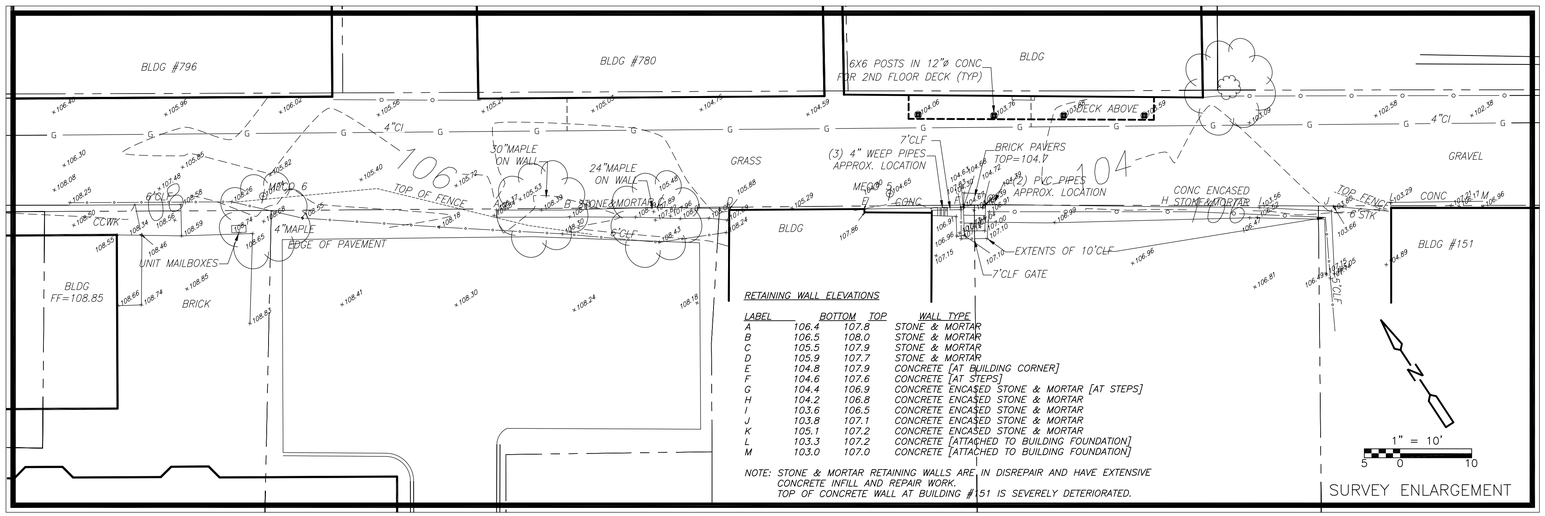

RETAINING WALL ELEVATIONS

LABEL	BOTTOM	TOP	WALL TYPE
A	106.4	107.8	STONE & MORTAR
B	106.5	108.0	STONE & MORTAR
C	105.5	107.9	STONE & MORTAR
D	105.9	107.7	STONE & MORTAR
E	104.8	107.9	CONCRETE [AT BUILDING CORNER]
F	104.6	107.6	CONCRETE [AT STEPS]
G	104.4	106.9	CONCRETE ENCASED STONE & MORTAR [AT STEPS]
H	104.2	106.8	CONCRETE ENCASED STONE & MORTAR
I	103.6	106.5	CONCRETE ENCASED STONE & MORTAR
J	103.8	107.1	CONCRETE ENCASED STONE & MORTAR
K	105.1	107.2	CONCRETE ENCASED STONE & MORTAR
L	103.3	107.2	CONCRETE [ATTACHED TO BUILDING FOUNDATION]
M	103.0	107.0	CONCRETE [ATTACHED TO BUILDING FOUNDATION]

NOTE: STONE & MORTAR RETAINING WALLS ARE IN DISREPAIR AND HAVE EXTENSIVE CONCRETE INFILL AND REPAIR WORK.
TOP OF CONCRETE WALL AT BUILDING #151 IS SEVERELY DETERIORATED.

SURVEY NOTES:

1. EXISTING CONDITIONS INFORMATION SHOWN IS COMPILED BASED ON FIELD SURVEY INFORMATION AND RECORD INFORMATION COMPILED BY TF MORAN INC, 48 CONSTITUTION DRIVE, BEDFORD, NH. 03110 TEL. (603)472–4488, DATED MARCH 6, 2015.
2. FUTURE MERRIMACK STREET PARKING LOT EXPANSION INFORMATION SHOWN IS COMPILED BASED ON UNIVERSITY OF MASSACHUSETTS LOWELL PROJECT NO. CL15–HT–0027 UNIVERSITY CROSSING PARKING LOT EXPANSIONS PROJECT DATED 3/4/2015 PREPARED BY NITCH ENGINEERING, 2 CENTER PLAZA, SUITE 430, BOSTON, MA 02108.
3. COORDINATES IN U.S. SURVEY FEET, ARE REFERENCED TO THE NORTH AMERICAN DATUM OF 1983 (NAD83/CORS), AS DETERMINED BY THE KeyNetGPS VIRTUAL REFERENCE SYSTEM (VRS), USING SMC'S TRIMBLE R8 GPS RECEIVERS.
4. ELEVATIONS IN U.S. SURVEY FEET, ARE REFERENCED TO THE NORTH AMERICAN VERTICAL DATUM OF 1988 (NAVD88), USING KeyNetGPS VRS.
5. SUBSURFACE UTILITY LINES AND FEATURES, AS SHOWN HEREON, WERE COMPILED FROM FIELD EVIDENCE AND/OR AVAILABLE RECORD INFORMATION FROM PUBLIC AND PRIVATE UTILITY PROVIDERS, AND THEIR LOCATIONS ARE ONLY APPROXIMATE. ACTUAL LOCATIONS MUST BE DETERMINED IN THE FIELD.
6. BEFORE CONSTRUCTION, ALL UTILITIES, PUBLIC AND PRIVATE MUST BE NOTIFIED (SEE MASSACHUSETTS GENERAL LAWS, CHAPTER 82 SECTION 40.) CALL "DIG SAFE" 1(888)344–7233 HTTP://WWW.DIGSAFE.COM.
7. FOR BORING INFORMATION SEE SPECIFICATION APPENDIX G.
8. BENCHMARK LOCATIONS:
   - –BM295: MILL SPIKE, ELEV: 106.83
     N,E: 3061873.9187, 703975.7377
   - –BM296: N,E: 3061721.1896, 704208.2153
   - –BM331: N,E: 3061580.2235, 704191.3278
   - –BM339: MAG NAIL, ELEV: 111.25
     N,E: 3061708.6844, 703793.1464
   - –BM347: MAG NAIL, ELEV: 107.75
     N,E: 3061791.9403, 703921.3376

FUTURE MERRIMACK STREET PARKING LOT EXPANSION – NOT IN CONTRACT

MASSACHUSETTS REGISTERED PROFESSIONAL ARCHITECT MICHAEL A. DODSON NO. 16074 4/30/15

REV. NO.	DATE	DRWN	CHKD	REMARKS

DESIGNED BY: M. DODSON
DRAWN BY: J. COROA
SHEET CHK'D BY: J. OLCOTT
CROSS CHK'D BY: J. DRAKE
APPROVED BY: M. DODSON
DATE: APRIL 2015

CDM Smith
670 N. Commercial St
Manchester, NH 03101
Tel: (603) 222-8300

LOWELL REGIONAL WASTEWATER UTILITY
LOWELL, MASSACHUSETTS
DECATUR WEST STORMWATER MANAGEMENT AND MARGINAL SEWER RELIEF PIPE

DECATUR WAY
EXISTING CONDITIONS PLAN

PROJECT NO. 0552–107165
FILE NAME: L001STPL.DWG
SHEET NO.
L-1
0552–80283

© 2015 CDM SMITH ALL RIGHTS RESERVED.
REUSE OF DOCUMENTS: THESE DOCUMENTS AND DESIGNS PROVIDED BY PROFESSIONAL SERVICE, INCORPORATED HEREIN, ARE THE PROPERTY OF CDM SMITH AND ARE NOT TO BE USED, IN WHOLE OR PART, FOR ANY OTHER PROJECT WITHOUT THE WRITTEN AUTHORIZATION OF CDM SMITH.

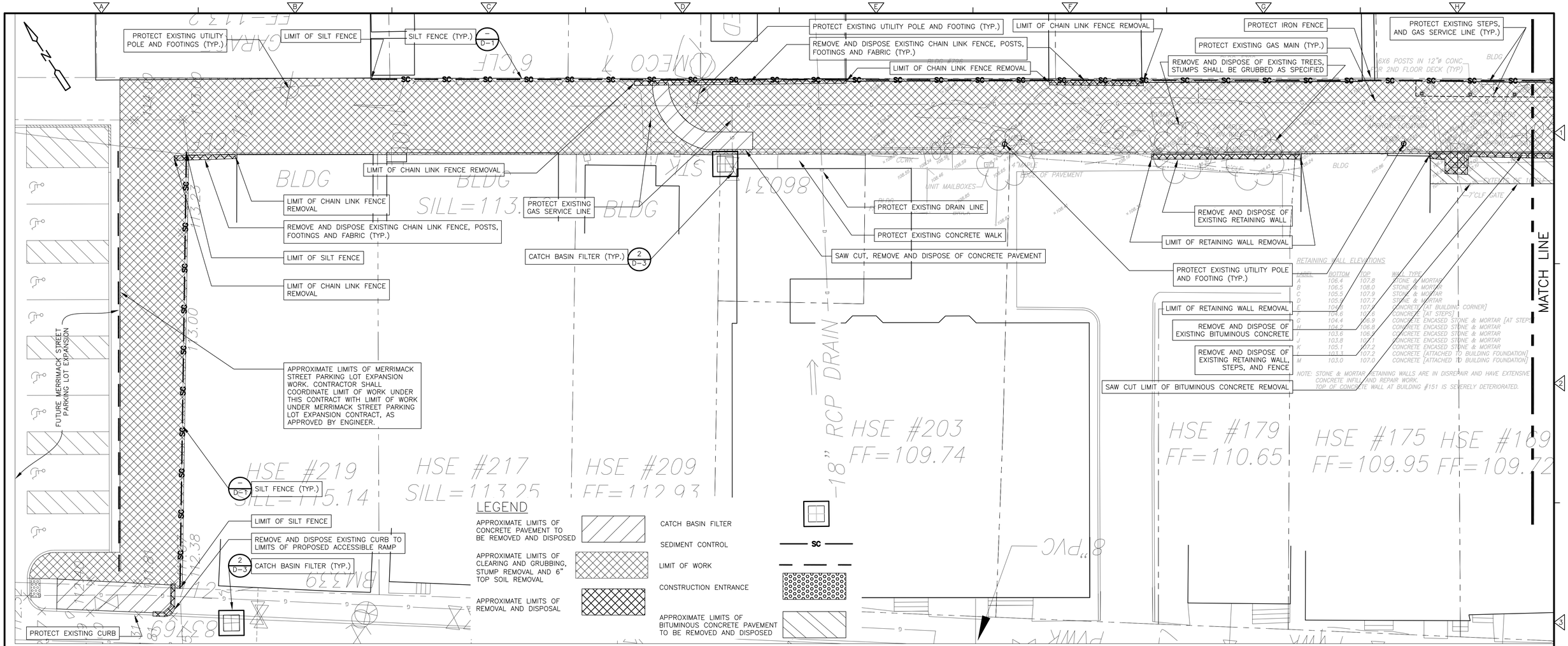

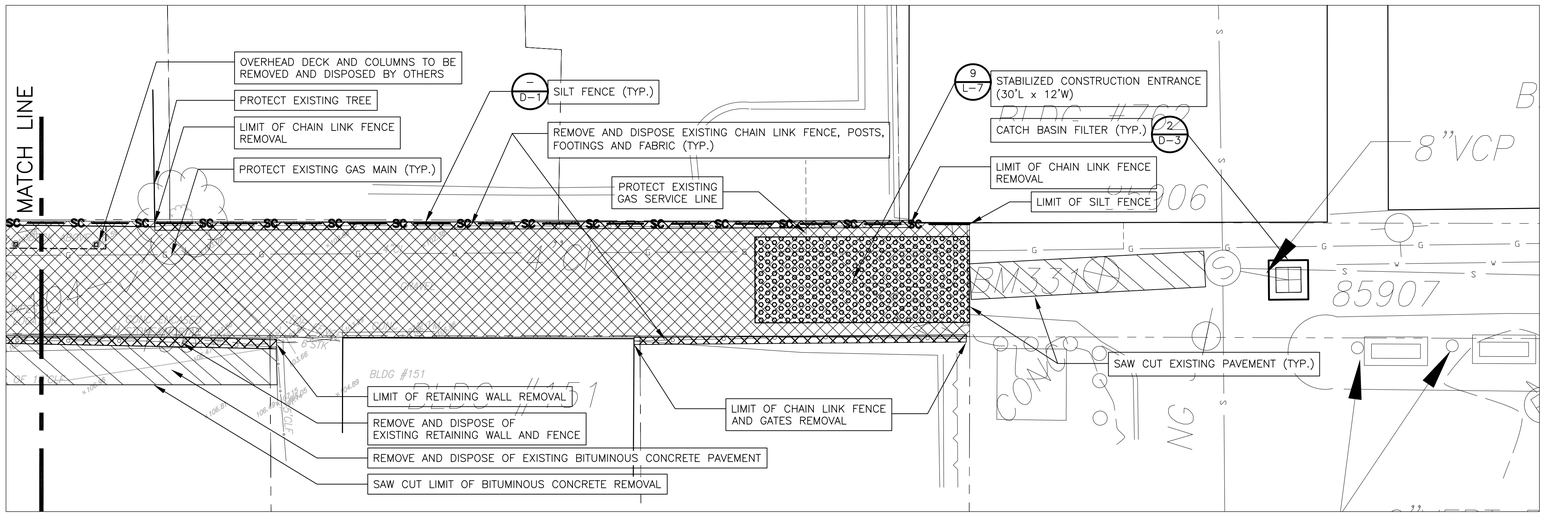

EXISTING CONDITIONS AND REMOVAL NOTES:

1. CONTRACTOR SHALL BE RESPONSIBLE FOR SITE SECURITY THROUGHOUT THE DURATION OF THE CONTRACT. THIS SHALL INCLUDE INSTALLATION OF TEMPORARY FENCING, SIGNS, AND OTHER SITE SECURITY MEASURES AS APPROVED BY THE OWNER, TO CONTROL PEDESTRIAN ACCESS TO AREAS OF WORK.
2. UTILITY LOCATIONS AND INFORMATION ARE APPROXIMATE. CONTRACTOR SHALL FIELD VERIFY AND REPORT ANY DISCREPANCIES TO THE OWNER/ENGINEER PRIOR TO PROCEEDING WITH CONSTRUCTION ACTIVITIES. CONTACT THE DIG SAFE CALL CENTER AT 1(888)344-7233 SEVENTY-TWO HOURS PRIOR TO EXCAVATION, GRADING AND/OR PAVING ACTIVITIES.
3. CONTRACTOR SHALL IDENTIFY AND PROTECT ALL ON-SITE UTILITIES, STRUCTURES, AND VEGETATION TO REMAIN UNLESS OTHERWISE NOTED THROUGHOUT THE DURATION OF THE CONTRACT.
4. EXCAVATED MATERIAL SHALL BE LOADED AND HAULED AND STOCKPILED IN A NEARBY LOCATION AND MANNER APPROVED BY THE ENGINEER AND MAY BE REUSED AS SPECIFIED.
5. NO WORK SHALL OCCUR OUTSIDE THE LIMIT OF WORK WITHOUT PRIOR APPROVAL BY THE OWNER. DAMAGE/DISTURBANCE TO ALL AREAS OF WORK SHALL BE REPAIRED BY THE CONTRACTOR AT NO COST TO THE OWNER.
6. PROTECT TREES TO BE RETAINED FROM CONSTRUCTION ACTIVITIES, INCLUDING BUT NOT LIMITED TO STOCKPILING, STAGING OF MATERIALS, EMPLOYEE PARKING, ETC.
7. REMOVE AND DISPOSE OF EXISTING TRASH, RUBBLE, LITTER, AND BROKEN DEBRIS IN AREAS OF PROPOSED WORK. EXCESS SOILS AND MISCELLANEOUS EXCAVATE NOT TO BE REUSED SHALL BE REMOVED AND DISPOSED FROM THE SITE AS SPECIFIED AND APPROVED BY THE ENGINEER.
8. ENSURE CONTINUED SAFE EMERGENCY ACCESS TO AND FROM ABUTTING RESIDENTIAL PROPERTIES THROUGHOUT THE CONSTRUCTION PERIOD.

EROSION AND SEDIMENTATION CONTROL NOTES

1. ALL WORK SHALL CONFORM TO MASSACHUSETTS D.E.P. GUIDELINES FOR EROSION AND SEDIMENTATION CONTROL LATEST VERSION.
2. CONTRACTOR SHALL INSPECT SEDIMENT AND EROSION CONTROL MEASURES AFTER EACH STORM EVENT AND REPAIR EROSION DAMAGE AS NECESSARY. MAINTENANCE SHALL INCLUDE CLEANING AND/OR REPLACEMENT OF MEASURES THAT ARE NO LONGER FUNCTIONAL AS DETERMINED BY THE ENGINEER.
3. SCHEDULES FOR GRADING AND LOAM AND MULCH PLACEMENT SHALL BE SUBMITTED TO THE ENGINEER FOR REVIEW AND APPROVAL PRIOR TO START OF WORK.
4. CONTRACTOR SHALL BE RESPONSIBLE FOR REMOVAL AND SATISFACTORY DISPOSAL OF ALL SEDIMENT CONTROL STRUCTURES UPON COMPLETION OF ALL WORK AND SOIL STABILIZATION AS DIRECTED BY THE ENGINEER.

MASSACHUSETTS MICHAEL A. DODSON NO. 1607 REGISTERED LANDSCAPE ARCHITECT

1" = 10'
5 0 10

REV. NO.	DATE	DRWN	CHKD	REMARKS

DESIGNED BY: M. DODSON
DRAWN BY: J. COROA
SHEET CHK'D BY: J. OLCOTT
CROSS CHK'D BY: J. DRAKE
APPROVED BY: M. DODSON
DATE: APRIL 2015

CDM Smith
670 N. Commercial St
Manchester, NH 03101
Tel: (603) 222-8300

LOWELL REGIONAL WASTEWATER UTILITY
LOWELL, MASSACHUSETTS
DECATUR WEST STORMWATER MANAGEMENT AND MARGINAL SEWER RELIEF PIPE

DECATUR WAY
SITE PREPARATION PLAN

PROJECT NO. 0552-107165
FILE NAME: L002STPL.DWG
SHEET NO.
L-2
0552-80284

XREFs: [CDMS_2436, CSTPL100-0552-81311-JAN2011, Topo_GIS_CAD, C001STWP, GreenAlley decatur FINAL] Images: []
Last saved by: COROAJJ Time: 3/20/2015 10:43:07 AM
pw:\\dacpwepp1:PW_XM1\0552\107165\04 Design Services NM_30%\02 Civil\10 CADD\01 Working\Conceptual Design\C002STPL.dwg
©2015 CDM SMITH ALL RIGHTS RESERVED.
REUSE OF DOCUMENTS: THESE DOCUMENTS AND DESIGNS PROVIDED BY PROFESSIONAL SERVICE, INCORPORATED HEREIN, ARE THE PROPERTY OF CDM SMITH AND ARE NOT TO BE USED, IN WHOLE OR PART, FOR ANY OTHER PROJECT WITHOUT THE WRITTEN AUTHORIZATION OF CDM SMITH.

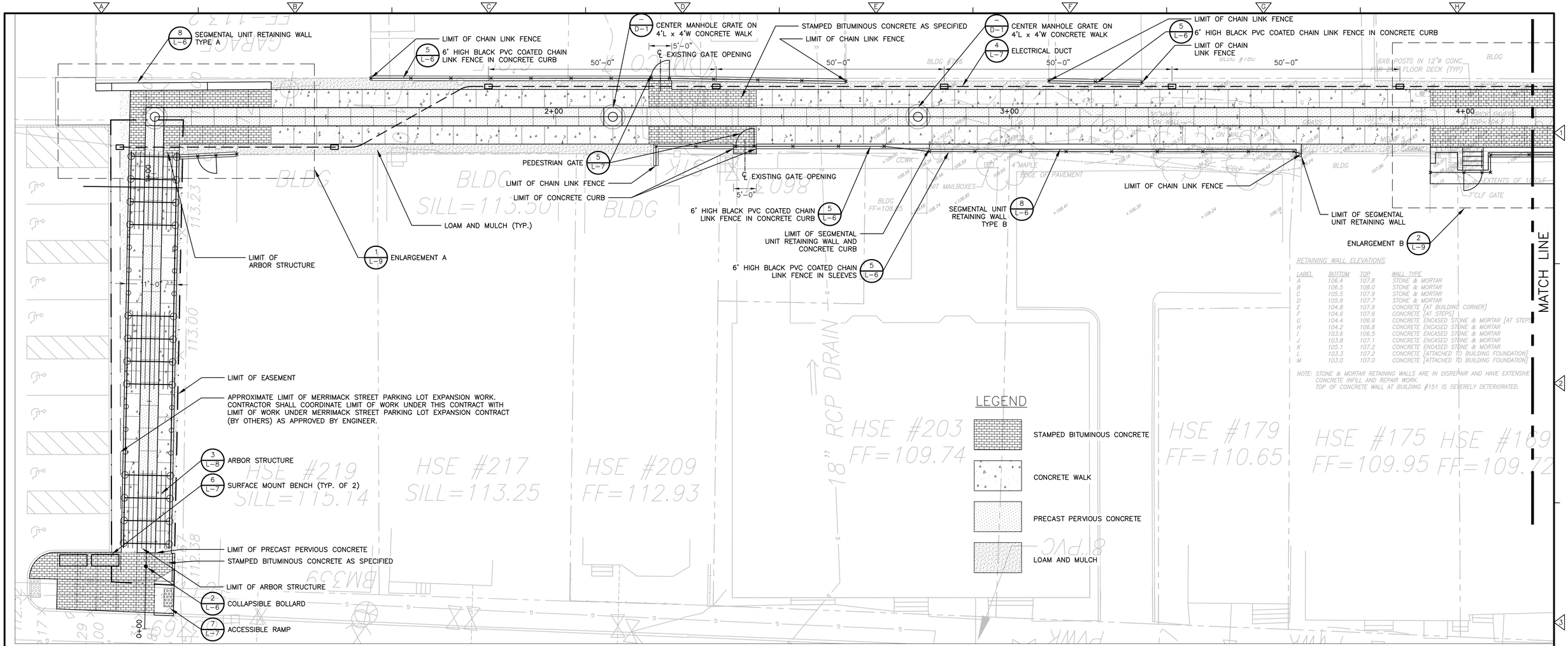

RETAINING WALL ELEVATIONS

LABEL	BOTTOM	TOP	WALL TYPE
A	106.4	107.8	STONE & MORTAR
B	106.5	108.0	STONE & MORTAR
C	105.5	107.9	STONE & MORTAR
D	105.9	107.7	STONE & MORTAR
E	104.8	107.9	CONCRETE [AT BUILDING CORNER]
F	104.6	107.6	CONCRETE [AT STEPS]
G	104.4	106.9	CONCRETE ENCASED STONE & MORTAR [AT STEPS]
H	104.2	106.8	CONCRETE ENCASED STONE & MORTAR
I	103.6	106.5	CONCRETE ENCASED STONE & MORTAR
J	103.8	107.1	CONCRETE ENCASED STONE & MORTAR
K	105.1	107.2	CONCRETE ENCASED STONE & MORTAR
L	103.3	107.2	CONCRETE [ATTACHED TO BUILDING FOUNDATION]
M	103.0	107.0	CONCRETE [ATTACHED TO BUILDING FOUNDATION]

NOTE: STONE & MORTAR RETAINING WALLS ARE IN DISREPAIR AND HAVE EXTENSIVE CONCRETE INFILL AND REPAIR WORK.
TOP OF CONCRETE WALL AT BUILDING #151 IS SEVERELY DETERIORATED.

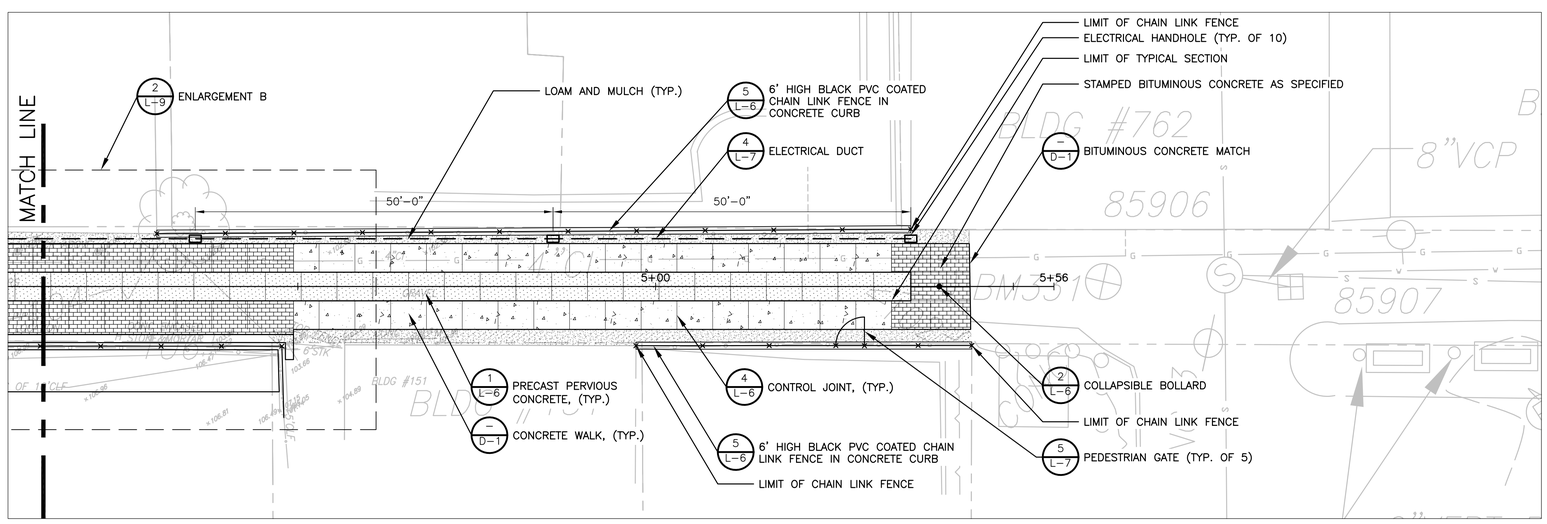

LAYOUT GENERAL NOTES:

1. EXISTING SURVEY MONUMENTS OR CONTROL POINTS SHALL BE FLAGGED AND PROTECTED THROUGHOUT THE CONSTRUCTION CONTRACT UNLESS OTHERWISE APPROVED BY THE ENGINEER. DAMAGED OR MISSING MONUMENTS OR CONTROL POINTS SHALL BE REPLACED AT THE CONTRACTOR'S EXPENSE.
2. PAVEMENT LIMITS, LOCATIONS OF STRUCTURES, BOLLARDS, FENCES, AND WALLS ARE APPROXIMATE. FINAL LOCATIONS SHALL BE DETERMINED IN THE FIELD AND APPROVED BY THE ENGINEER/LANDSCAPE ARCHITECT AFTER STAKING BY THE CONTRACTOR BASED ON ACTUAL SITE CONDITIONS.
3. AREAS DISTURBED BY CONSTRUCTION ACTIVITIES AND NOT COVERED WITH BITUMINOUS CONCRETE, PRECAST PERVIOUS CONCRETE, CONCRETE WALK, OR RETAINING WALLS SHALL RECEIVE 6" LAYER LOAM AND 2" LAYER MULCH AS SPECIFIED.
4. DIMENSIONS ARE TO FACE OF WALL, EDGE OF PAVEMENT, OR TO CENTERLINES UNLESS OTHERWISE SHOWN ON THE DRAWING.

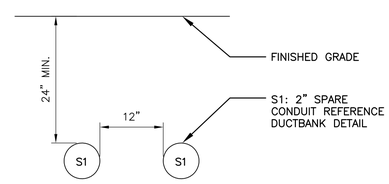

ELECTRICAL DUCTBANK DETAIL 1 / L-3
NOT TO SCALE

1" = 10'

MASSACHUSETTS MICHEL A. DODSON REGISTERED LANDSCAPE ARCHITECT NO. 1607

REV. NO.	DATE	DRWN	CHKD	REMARKS

DESIGNED BY: M. DODSON
DRAWN BY: J. COROA
SHEET CHK'D BY: J. OLCOTT
CROSS CHK'D BY: J. DRAKE
APPROVED BY: M. DODSON
DATE: APRIL 2015

CDM Smith
670 N. Commercial St
Manchester, NH 03101
Tel: (603) 222-8300

LOWELL REGIONAL WASTEWATER UTILITY
LOWELL, MASSACHUSETTS
DECATUR WEST STORMWATER MANAGEMENT AND MARGINAL SEWER RELIEF PIPE

DECATUR WAY
SITE LAYOUT AND MATERIALS PLAN

PROJECT NO. 0552-107165
FILE NAME: L003STPL.DWG
SHEET NO. L-3
0552-80285

XREFs: [CDMS_2436, CSTPL100-0552-81311-JAN2011, Topo_GIS_CAD, C001STWP] Images: []
Last saved by: COROAJU Time: 3/19/2015 9:51:39 AM
pw:\\dacpwepp1:PW_XM1\0552\107165\04 Design Services NM_30%\02 Civil\10 CADD\01 Working\Conceptual Design\C003STPL.dwg
©2015 CDM SMITH ALL RIGHTS RESERVED.
REUSE OF DOCUMENTS: THESE DOCUMENTS AND DESIGNS PROVIDED BY PROFESSIONAL SERVICE, INCORPORATED HEREIN, ARE THE PROPERTY OF CDM SMITH AND ARE NOT TO BE USED, IN WHOLE OR PART, FOR ANY OTHER PROJECT WITHOUT THE WRITTEN AUTHORIZATION OF CDM SMITH.

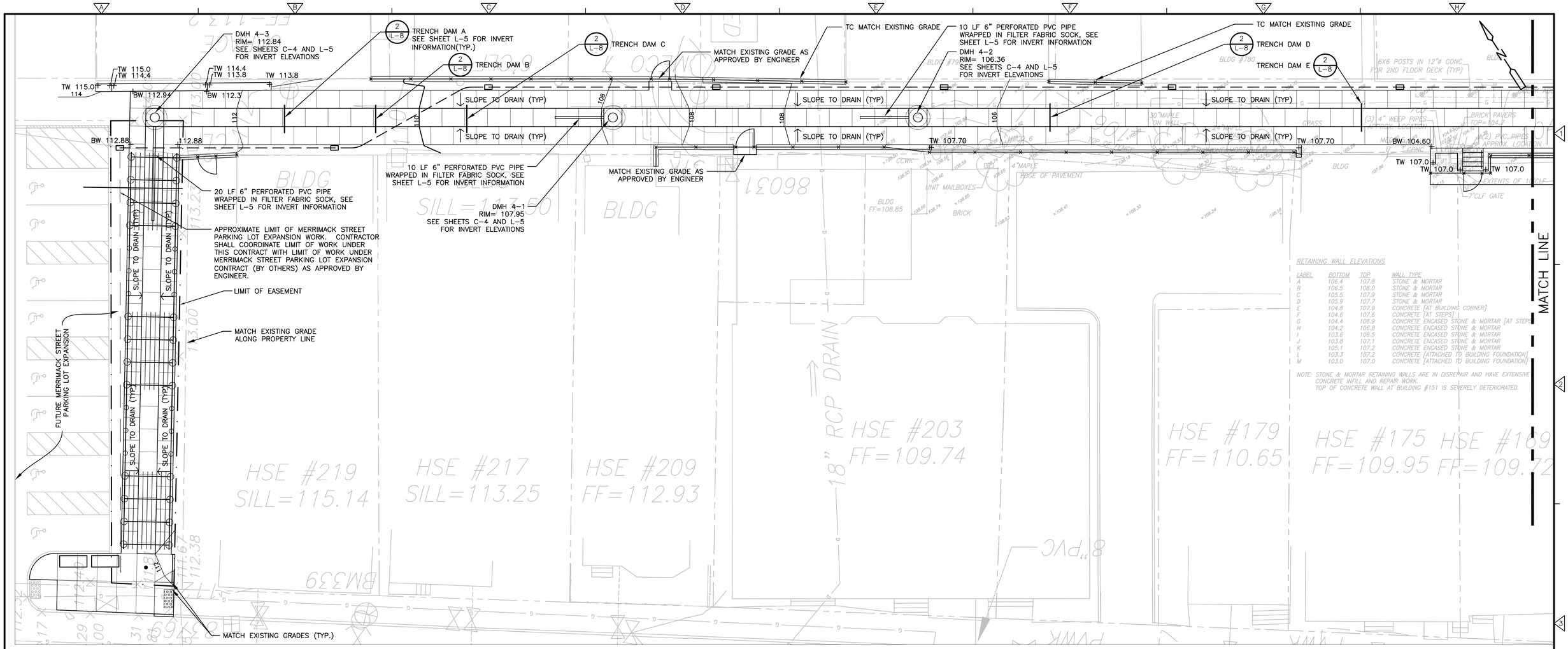

RETAINING WALL ELEVATIONS

LABEL	BOTTOM	TOP	WALL TYPE
A	106.4	107.8	STONE & MORTAR
B	106.5	108.0	STONE & MORTAR
C	105.5	107.9	STONE & MORTAR
D	105.9	107.7	STONE & MORTAR
E	104.8	107.9	CONCRETE [AT BUILDING CORNER]
F	104.6	107.6	CONCRETE [AT STEPS]
G	104.4	106.9	CONCRETE ENCASED STONE & MORTAR [AT STEPS]
H	104.2	106.8	CONCRETE ENCASED STONE & MORTAR
I	103.6	106.5	CONCRETE ENCASED STONE & MORTAR
J	103.8	107.1	CONCRETE ENCASED STONE & MORTAR
K	105.1	107.2	CONCRETE ENCASED STONE & MORTAR
L	103.3	107.2	CONCRETE [ATTACHED TO BUILDING FOUNDATION]
M	103.0	107.0	CONCRETE [ATTACHED TO BUILDING FOUNDATION]

NOTE: STONE & MORTAR RETAINING WALLS ARE IN DISREPAIR AND HAVE EXTENSIVE CONCRETE INFILL AND REPAIR WORK.
TOP OF CONCRETE WALL AT BUILDING #151 IS SEVERELY DETERIORATED.

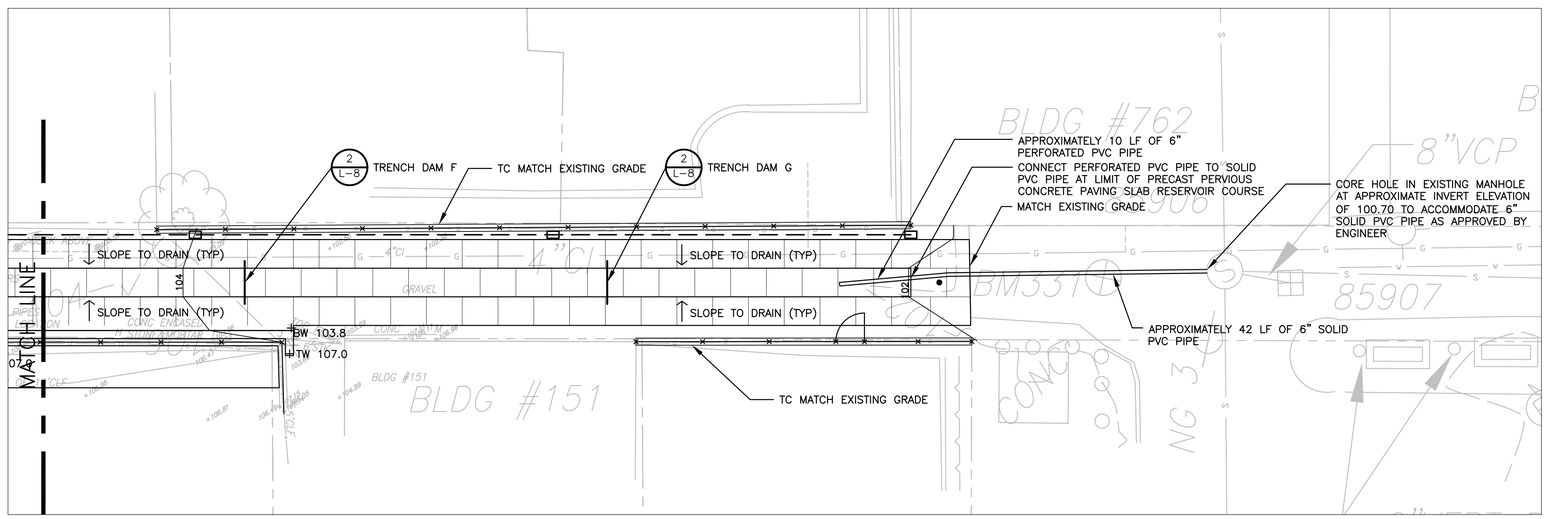

GRADING GENERAL NOTES:

1. CONTRACTOR SHALL NOTIFY ENGINEER OF OBSTRUCTIONS ENCOUNTERED DURING EXCAVATION PRIOR TO CONTINUING WITH CONSTRUCTION ACTIVITIES.
2. ALL AREAS DISTURBED BY CONSTRUCTION ACTIVITIES SHALL BE REPAIRED AT THE CONTRACTOR'S EXPENSE IN MANNER APPROVED BY THE ENGINEER.
3. CONTRACTOR SHALL BE RESPONSIBLE FOR INSTALLATION AND MAINTENANCE OF GRADE STAKES FOR REVIEW AND APPROVAL BY THE ENGINEER PRIOR TO INSTALLATION. CONTRACTOR SHALL BE RESPONSIBLE FOR A FINAL FIELD CHECK OF FINISHED GRADES AND WILL DEVELOP AND SUBMIT A SCALED AS-BUILT SITE PLAN DRAWING FOR REVIEW BY THE ENGINEER.
4. LOCATION OF STOCKPILED MATERIALS SHALL BE IN AREAS APPROVED BY THE OWNER AND ENGINEER.
5. IF EXISTING TREES, LARGE ROOTS UTILITIES, OR STRUCTURES IMPEDE EXCAVATION ACTIVITIES IN ANY MANNER, CONTRACTOR SHALL INFORM THE ENGINEER PRIOR TO CONTINUING WITH CONSTRUCTION ACTIVITIES.
6. WALKING SURFACES INDICATED WITH "SLOPE TO DRAIN" SHALL NOT BE STEEPER THAN 2% UNLESS APPROVED BY THE ENGINEER.
7. ALL GRADES ARE APPROXIMATE, FINAL SPOT GRADE AND CONTOUR INFORMATION SHALL BE REVIEWED AND APPROVED BY ENGINEER PRIOR TO FINAL GRADE PLACEMENT.

MASSACHUSETTS REGISTERED PROFESSIONAL ARCHITECT MICHAEL A. DODSON NO. 1607
4/30/15

1" = 10'
5 0 10

REV. NO.	DATE	DRWN	CHKD	REMARKS

DESIGNED BY: M. DODSON
DRAWN BY: J. COROA
SHEET CHK'D BY: J. OLCOTT
CROSS CHK'D BY: J. DRAKE
APPROVED BY: M. DODSON
DATE: APRIL 2015

CDM Smith
670 N. Commercial St
Manchester, NH 03101
Tel: (603) 222-8300

LOWELL REGIONAL WASTEWATER UTILITY
LOWELL, MASSACHUSETTS
DECATUR WEST STORMWATER MANAGEMENT AND MARGINAL SEWER RELIEF PIPE

DECATUR WAY
SITE GRADING AND DRAINAGE PLAN

PROJECT NO. 0552-107165
FILE NAME: L004STPL.DWG
SHEET NO.
L-4
0552-80286

XREFs: [CDMS_2436, CSTPL100-0552-81311-JAN2011, Topo_GIS_CAD, C001STWP] Images: []
Last saved by: COROAJJ Time: 3/9/2015 4:04:04 PM
pw:\\dacpwapp1:PW_XM1\0552\107165\04 Design Services NM_30%\02 Civil\10 CADD\01 Working\Conceptual Design\C004STPL.dwg
© 2015 CDM SMITH ALL RIGHTS RESERVED.
REUSE OF DOCUMENTS: THESE DOCUMENTS AND DESIGNS PROVIDED BY PROFESSIONAL SERVICE, INCORPORATED HEREIN, ARE THE PROPERTY OF CDM SMITH AND ARE NOT TO BE USED, IN WHOLE OR PART, FOR ANY OTHER PROJECT WITHOUT THE WRITTEN AUTHORIZATION OF CDM SMITH.

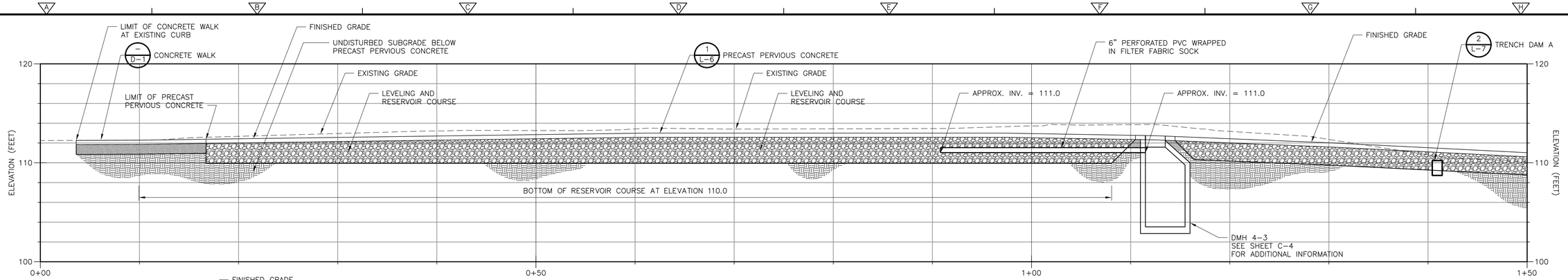

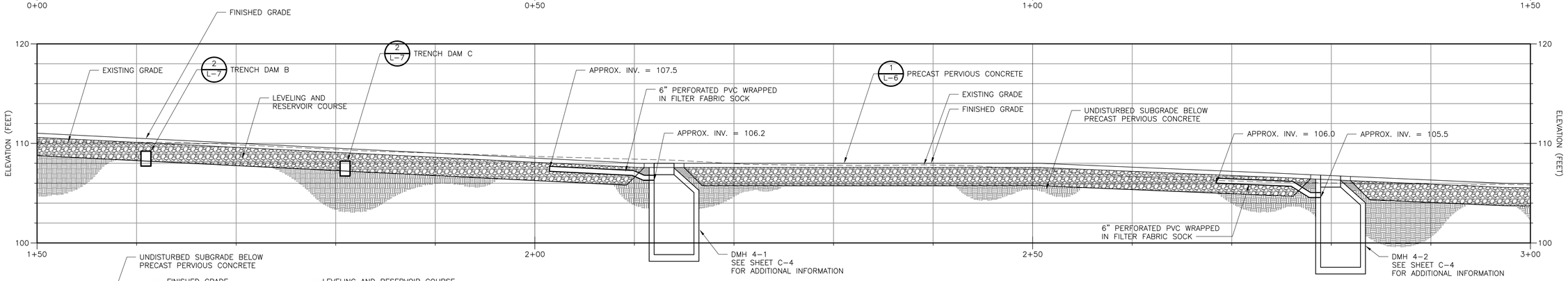

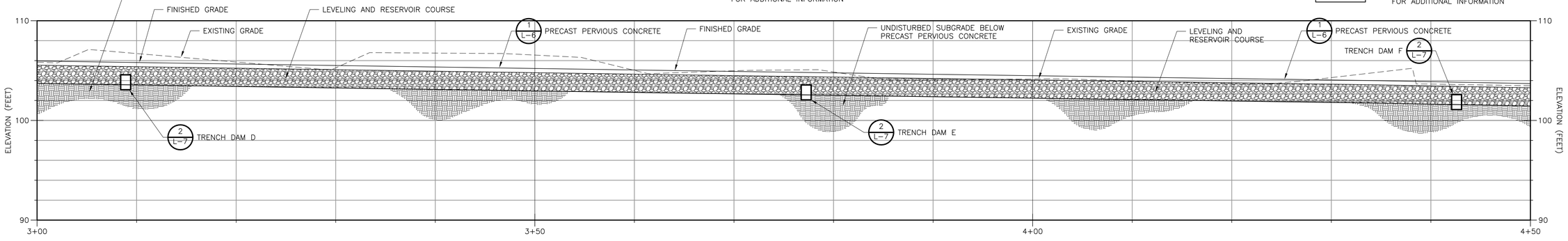

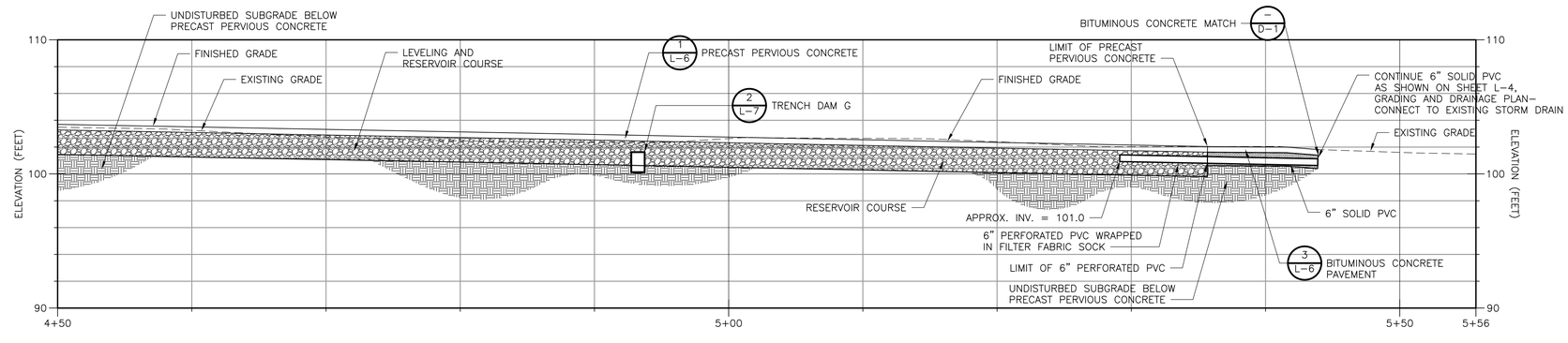

NOTE:
ALL ELEVATIONS ARE APPROXIMATE, FINAL ELEVATION INFORMATION SHALL BE APPROVED BY ENGINEER PRIOR TO FINAL GRADE PLACEMENT.

1" = 5'
2.5 0 5

MASSACHUSETTS MICHAEL A. DODSON NO. 1607 REGISTERED LANDSCAPE ARCHITECT 4/20/15

REV. NO.	DATE	DRWN	CHKD	REMARKS

DESIGNED BY: M. DODSON
DRAWN BY: R. PRESCOTT
SHEET CHK'D BY: J. OLCOTT
CROSS CHK'D BY: J. DRAKE
APPROVED BY: M. DODSON
DATE: APRIL 2015

CDM Smith
670 N. Commercial St
Manchester, NH 03101
Tel: (603) 222-8300

LOWELL REGIONAL WASTEWATER UTILITY
LOWELL, MASSACHUSETTS
DECATUR WEST STORMWATER MANAGEMENT AND MARGINAL SEWER RELIEF PIPE

DECATUR WAY
SITE SECTION

PROJECT NO. 0552-107165
FILE NAME: L005STDT.DWG
SHEET NO.
L-5
0552-80287

XREFs: [CDMS_2436, CSTPL100-0552-81311-JAN2011, Topo_GIS_CAD, C001STWP] Images: []
Last saved by: CORONJJ Time: 3/19/2015 9:51:39 AM
pw:\\dacpwapp1:PW_XM1\0552\107165\04 Design Services NM_30%\02 Civil\10 CADD\01 Working\Conceptual Design\C003STPL.dwg
© 2015 CDM SMITH ALL RIGHTS RESERVED.
REUSE OF DOCUMENTS: THESE DOCUMENTS AND DESIGNS PROVIDED BY PROFESSIONAL SERVICE, INCORPORATED HEREIN, ARE THE PROPERTY OF CDM SMITH AND ARE NOT TO BE USED, IN WHOLE OR PART, FOR ANY OTHER PROJECT WITHOUT THE WRITTEN AUTHORIZATION OF CDM SMITH.

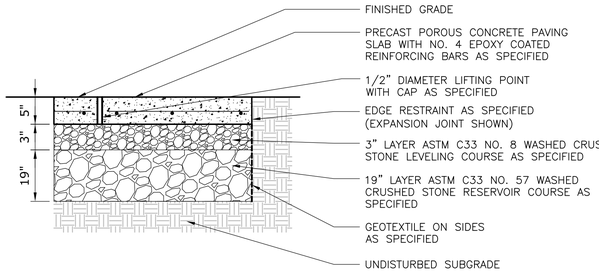

PRECAST PERVIOUS CONCRETE PAVEMENT

DETAIL 1 (L-6)
NOT TO SCALE

NOTES:

1. REINFORCING TO BE GRADE 60, BLACK, EPOXY COATED STEEL.
2. CONCRETE MIX DESIGNED FOR 18.8% VOIDS
3. CONCRETE TO ACHIEVE A MINIMUM COMPRESSIVE STRENGTH OF 3,000 PSI AT 28 DAYS
4. CONFORMS TO ACI AND ASTM SPECIFICATIONS
5. 2 1/2" CLEAR BETWEEN BOTTOM OF SLAB AND BOTTOM OF LONGITUDINAL REBAR

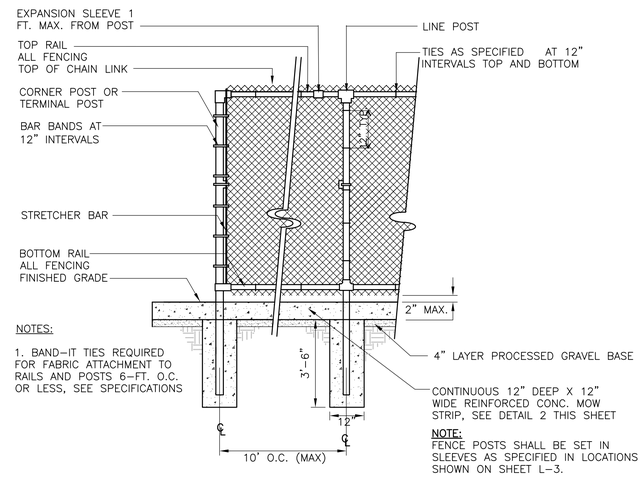

NOTES:

1. BAND-IT TIES REQUIRED FOR FABRIC ATTACHMENT TO RAILS AND POSTS 6-FT. O.C. OR LESS, SEE SPECIFICATIONS

NOTE:
FENCE POSTS SHALL BE SET IN SLEEVES AS SPECIFIED IN LOCATIONS SHOWN ON SHEET L-3.

CHAIN LINK FENCE WITH CAST-IN-PLACE CONCRETE CURB

DETAIL 5 (L-6)
NOT TO SCALE

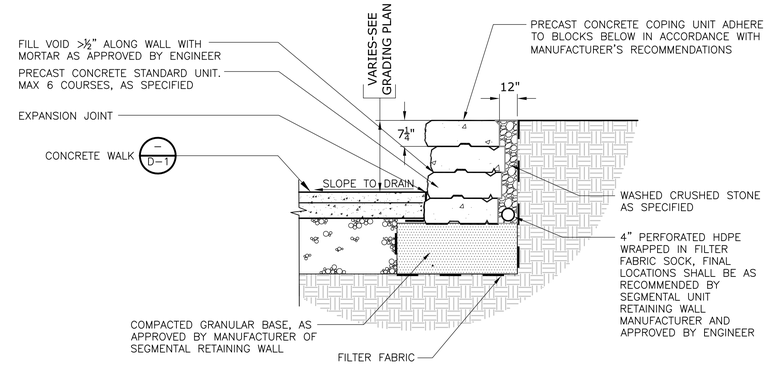

SEGMENTAL UNIT RETAINING WALL

SECTION 8 (L-6)
NOT TO SCALE

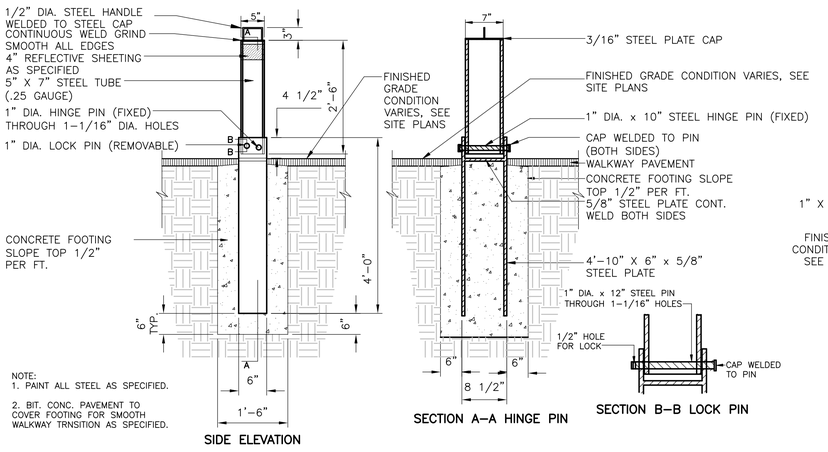

NOTE:
1. PAINT ALL STEEL AS SPECIFIED.
2. BIT. CONC. PAVEMENT TO COVER FOOTING FOR SMOOTH WALKWAY TRNSITION AS SPECIFIED.

SIDE ELEVATION — SECTION A-A HINGE PIN — SECTION B-B LOCK PIN

COLLAPSIBLE BOLLARD

DETAIL 2 (L-6)
NOT TO SCALE

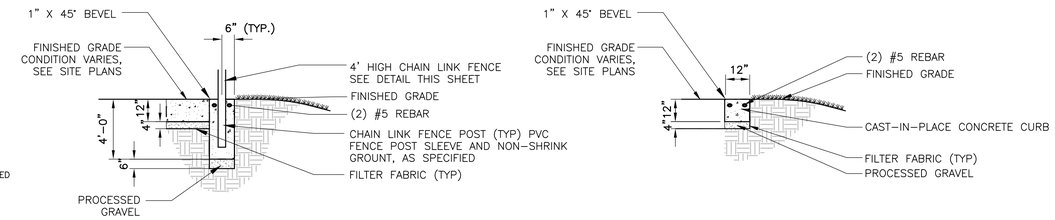

SECTION THROUGH FOOTING — SECTION THROUGH CURB

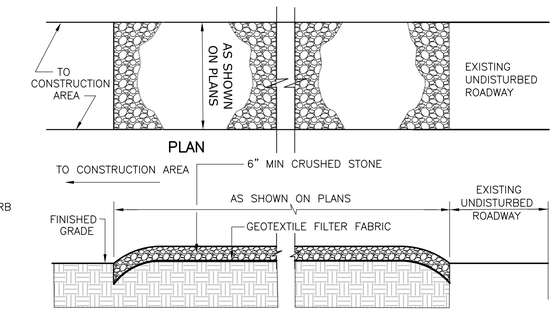

PROFILE

NOTES:

1. PROVIDE APPROPRIATE TRANSITION BETWEEN STABILIZED CONSTRUCTION ENTRANCE AND UNDISTURBED ROADWAY.
2. THE ENTRANCE SHALL BE MAINTAINED IN A CONDITION WHICH WILL PREVENT TRACKING OR FLOWING OF SEDIMENT ONTO UNDISTURBED ROADWAY. THIS MAY REQUIRE PERIODIC TOP DRESSING WITH ADDITIONAL STONE OR ADDING STONE TO THE LENGTH OF THE ENTRANCE.
3. REPAIR AND CLEANOUT MEASURES USED TO TRAP SEDIMENT.
4. ALL SEDIMENT SPILLED, DROPPED, WASHED, OR TRACKED ONTO UNDISTURBED ROADWAY SHALL BE REMOVED AS DIRECTED BY THE ENGINEER.

STABILIZED CONSTRUCTION ENTRANCE

DETAIL 9 (L-6)
NOT TO SCALE

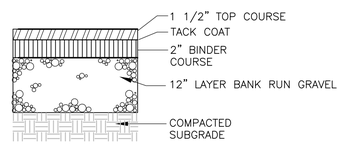

BIT. CONC. PAVEMENT

DETAIL 3 (L-6)
NOT TO SCALE

1.) BASE COURSE SHALL EXTEND 3" MIN. BEYOND EDGE OF PAVEMENT

PLAN

CAST-IN-PLACE CONCRETE CURB

DETAIL 6 (L-6)
NOT TO SCALE

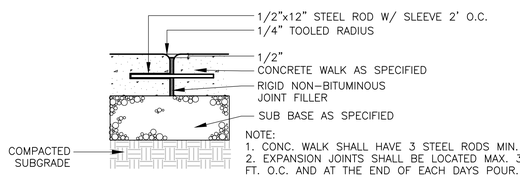

NOTE:
1. CONC. WALK SHALL HAVE 3 STEEL RODS MIN.
2. EXPANSION JOINTS SHALL BE LOCATED MAX. 30 FT. O.C. AND AT THE END OF EACH DAYS POUR.

EXPANSION JOINT

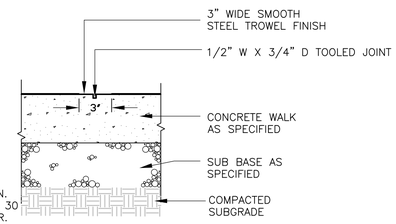

CONTROL JOINT

CONCRETE WALK JOINTS

DETAIL 4 (L-6)
NOT TO SCALE

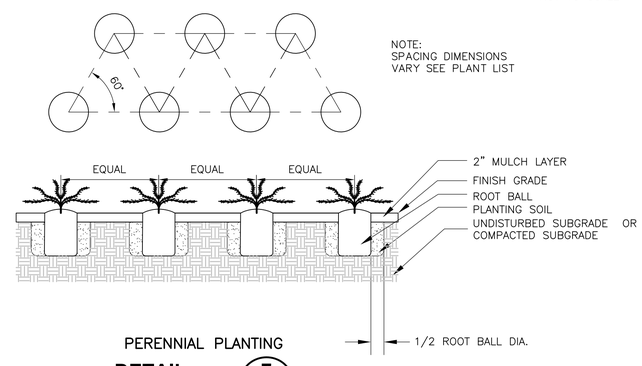

NOTE:
SPACING DIMENSIONS VARY SEE PLANT LIST

PERENNIAL PLANTING

DETAIL 7 (L-6)
NOT TO SCALE

MASSACHUSETTS REGISTERED LANDSCAPE ARCHITECT MICHAEL A. DODSON NO. 1607
4/30/15

REV. NO.	DATE	DRWN	CHKD	REMARKS

DESIGNED BY: M. DODSON
DRAWN BY: R. FOGG
SHEET CHK'D BY: J. OLCOTT
CROSS CHK'D BY: J. DRAKE
APPROVED BY: M. DODSON
DATE: APRIL 2015

CDM Smith
670 N. Commercial St
Manchester, NH 03101
Tel: (603) 222-8300

LOWELL REGIONAL WASTEWATER UTILITY
LOWELL, MASSACHUSETTS
DECATUR WEST STORMWATER MANAGEMENT AND MARGINAL SEWER RELIEF PIPE

DECATUR WAY SITE DETAILS I

PROJECT NO. 0552-107165
FILE NAME: L006STDT.DWG
SHEET NO. **L-6**
0552-80288

XREFs: [S_85L11, CDMS_2436, CDMS_2436_LOWELL] Images: []
Last saved by: FOGGRL Time: 3/30/2015 4:36:03 PM
pw:\\docpwapp1:PW_XM1\0552\107165\04 Design Services NM_30%\02 Civil\10 CADD\01 Working\Conceptual Design\L006STDT.dwg
©2015 CDM SMITH ALL RIGHTS RESERVED.
REUSE OF DOCUMENTS: THESE DOCUMENTS AND DESIGNS PROVIDED BY PROFESSIONAL SERVICE, INCORPORATED HEREIN, ARE THE PROPERTY OF CDM SMITH AND ARE NOT TO BE USED, IN WHOLE OR PART, FOR ANY OTHER PROJECT WITHOUT THE WRITTEN AUTHORIZATION OF CDM SMITH.

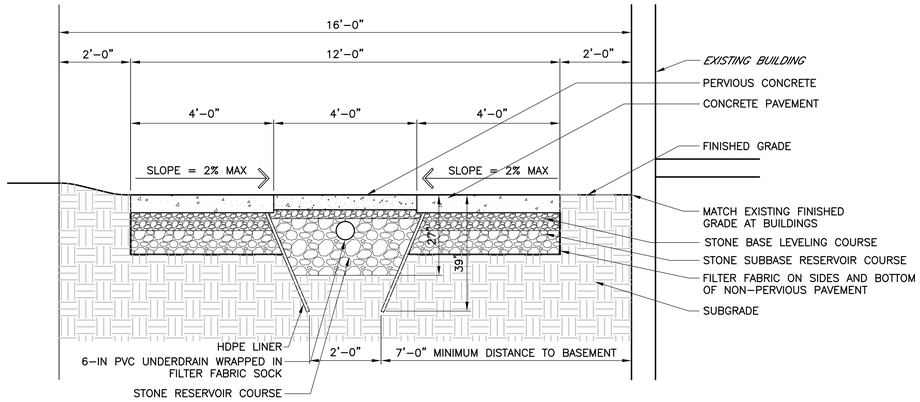

TYPICAL SECTION

DETAIL 1 (L-7)

NOT TO SCALE

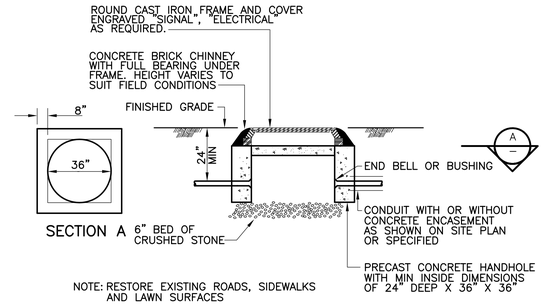

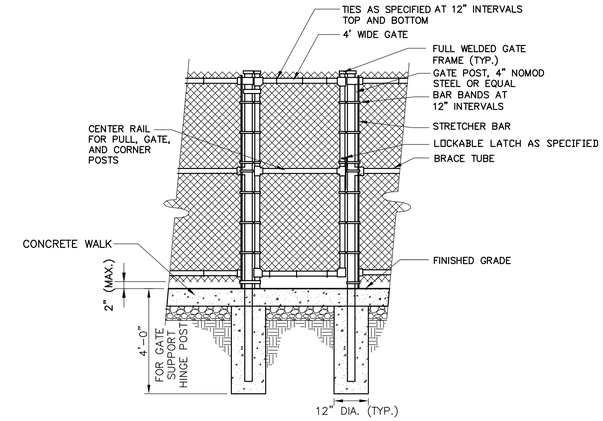

CHAIN LINK FENCE PEDESTRIAN GATE

DETAIL 5 (L-7)

NOT TO SCALE

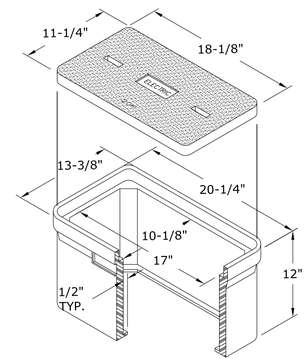

ELECTRIC HANDHOLE

DETAIL 3 (L-7)

NOT TO SCALE

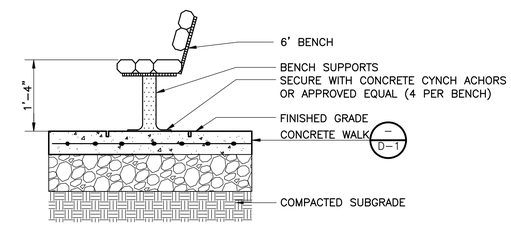

SECTION

SURFACE MOUNT BENCH

DETAIL 6 (L-7)

NOT TO SCALE

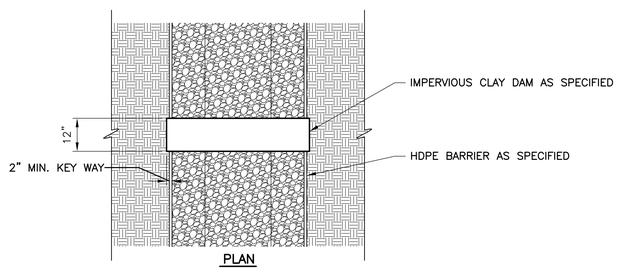

TRENCH DAM

DETAIL 2 (L-7)

NOT TO SCALE

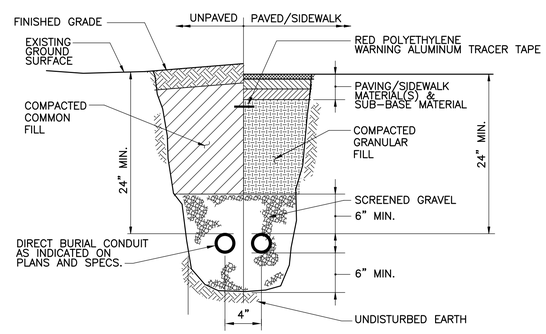

TYPICAL DIRECT BURIAL CONDUIT INSTALLATION

DETAIL 4 (L-7)

NOT TO SCALE

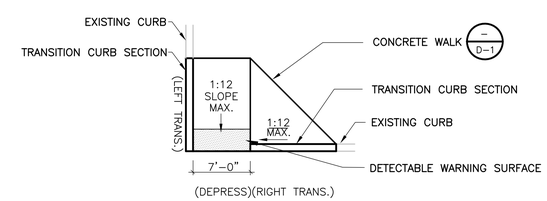

NOTES:

1. DIMENSIONS ARE SUBJECT TO CHANGE IN FIELD. ALL SLOPES AND DIMENSIONS TO COMPLY WITH A.D.A. AND MAAB REQUIREMENTS.
2. PROVIDE EXPANSION JOINT AT TOPS OF RAMP AND AT BACK OF WALK AT INTERFACE OF CURB.
3. PROVIDE HEAVY BROOM FINISH ON RAMP AND SIDE SLOPES PERPENDICULAR TO FLOW OF TRAFFIC.
4. MINIMUM WALK DIMENSIONS ARE FROM BACK OF CURB. TRANSITION CURB LENGTH AS REQUIRED TO MEET CODE.

ACCESSIBLE CURB RAMP

DETAIL 7 (L-7)

NOT TO SCALE

MASSACHUSETTS MICHAEL A. DODSON NO. 1607 REGISTERED LANDSCAPE ARCHITECT 4/30/15

REV. NO.	DATE	DRWN	CHKD	REMARKS

DESIGNED BY: M. DODSON
DRAWN BY: R. FOGG
SHEET CHK'D BY: J. OLCOTT
CROSS CHK'D BY: J. DRAKE
APPROVED BY: M. DODSON
DATE: APRIL 2015

CDM Smith
670 N. Commercial St
Manchester, NH 03101
Tel: (603) 222-8300

LOWELL REGIONAL WASTEWATER UTILITY
LOWELL, MASSACHUSETTS
DECATUR WEST STORMWATER MANAGEMENT AND MARGINAL SEWER RELIEF PIPE

DECATUR WAY SITE DETAILS II

PROJECT NO. 0552-107165
FILE NAME: L008STDT.DWG
SHEET NO. **L-7**
0552-80289

XREFs: [S_85L11, CDMS_2436, CDMS_2436_LOWELL] Images: []
Last saved by: FOGGRL Time: 3/30/2015 4:36:03 PM
pw:\\dacpwapp1:PW_XM1\0552\107165\04 Design Services NM_30%\02 Civil\10 CADD\01 Working\Conceptual Design\L008STDT.dwg
© 2015 CDM SMITH ALL RIGHTS RESERVED.
REUSE OF DOCUMENTS: THESE DOCUMENTS AND DESIGNS PROVIDED BY PROFESSIONAL SERVICE, INCORPORATED HEREIN, ARE THE PROPERTY OF CDM SMITH AND ARE NOT TO BE USED, IN WHOLE OR PART, FOR ANY OTHER PROJECT WITHOUT THE WRITTEN AUTHORIZATION OF CDM SMITH.

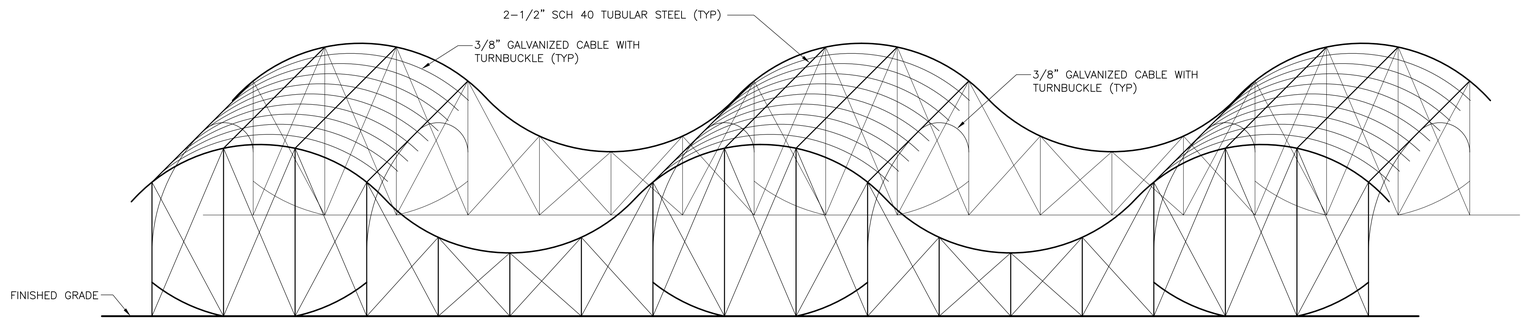

ARBOR STRUCTURE AXONOMETRIC

DETAIL 1 / L-8

NOT TO SCALE

GENERAL NOTES:

1. THIS DRAWING HAS BEEN PROVIDED TO SHOW DESIGN INTENT FOR BIDDING PURPOSES ONLY AND SHALL NOT BE CONSIDERED FOR CONSTRUCTION.

2. ALL MEMBERS SHALL RECEIVE POWDER COATED FINISH, COLOR SHALL BE APPROVED BY OWNER.

3. THE CONTRACTOR SHALL PROVIDE SHOP DRAWINGS FROM THE ARBOR STRUCTURE FABRICATOR WHICH SHALL BE PREPARED BY AND BEAR THE STAMP OF A REGISTERED PROFESSIONAL ENGINEER OF THE COMMONWEALTH OF MASSACHUSETTS.

4. THE ARBOR STRUCTURE SHALL BE SUPPORTED ON FOOTINGS WHICH SHALL BE DESIGNED BY A STRUCTURAL ENGINEER, BASED ON ACTUAL STRUCTURE DESIGN LOADS AND GEOTECHNICAL DATA FOR THIS SITE.

5. ALL DRAWINGS SHALL COMPLY ALL APPLICABLE CODES INCLUDING 521 CMR MA ARCHITECTURAL ACCESS BOARD, ADA, MASS BUILDING CODE, AND OTHER APPLICABLE CODES, LATEST EDITIONS.

6. THE CONTRACTOR SHALL PROVIDE FIVE SETS OF STAMPED SHOP DRAWINGS AND DESIGN CALCULATIONS, SUITABLE FOR CONSTRUCTION. THESE DRAWINGS AND CALCULATIONS SHALL BE SUBMITTED BY THE CONTRACTOR TO THE CITY OF LOWELL AND TO THE ENGINEER FOR REVIEW.

PLANT SCHEDULE

QTY	SYM	BOTANICAL NAME	COMMON NAME	COND	SIZE
VINES (SEE DETAIL 7 ON SHEET L-6)					
72	LS	LONICERA SEMPERVIRENS VAR. MINOR	HONEYSUCKLE	CONTAINER	2 GALLON

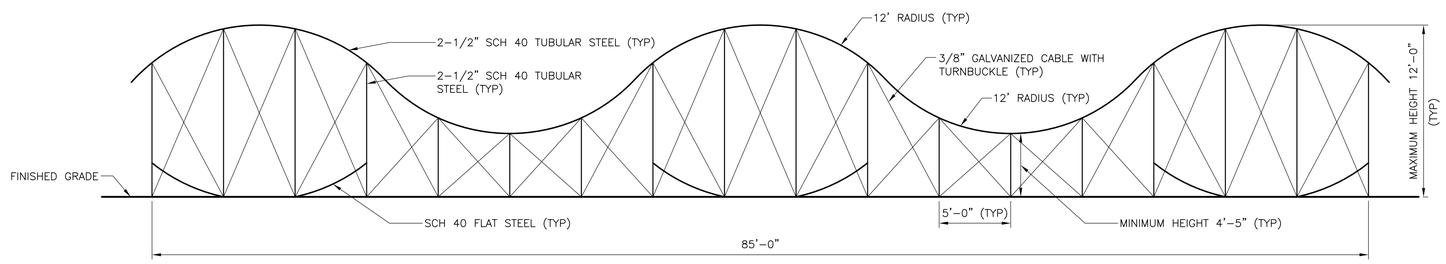

ARBOR STRUCTURE ELEVATION

DETAIL 2 / L-8

NOT TO SCALE

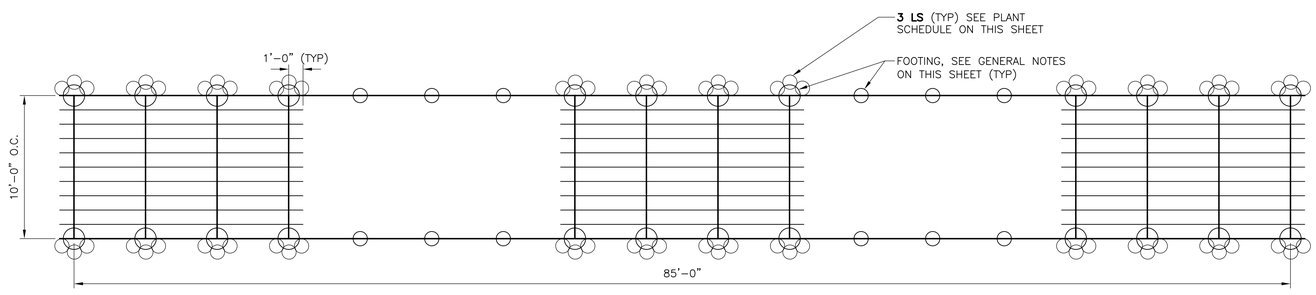

ARBOR STRUCTURE PLAN

DETAIL 3 / L-8

NOT TO SCALE

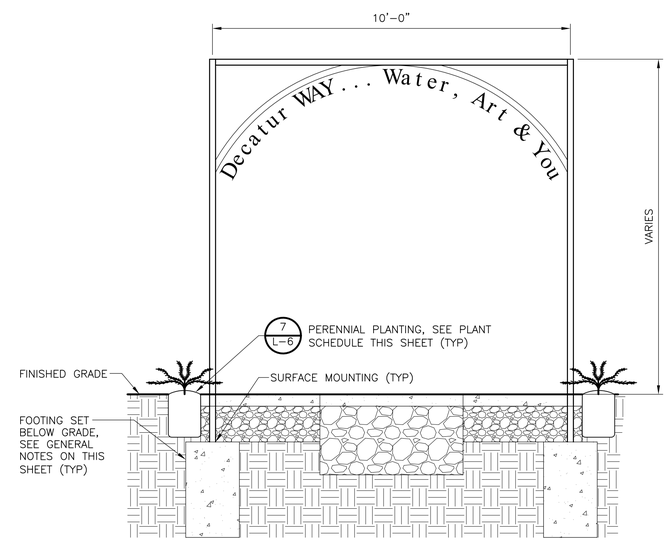

ARBOR STRUCTURE FRONT VIEW AND FOOTINGS

DETAIL 4 / L-8

NOT TO SCALE

REV. NO.	DATE	DRWN	CHKD	REMARKS

DESIGNED BY: M. DODSON
DRAWN BY: M. DODSON
SHEET CHK'D BY: J. OLCOTT
CROSS CHK'D BY: J. DRAKE
APPROVED BY: M. DODSON
DATE: APRIL 2015

CDM Smith
670 N. Commercial St
Manchester, NH 03101
Tel: (603) 222-8300

LOWELL REGIONAL WASTEWATER UTILITY
LOWELL, MASSACHUSETTS

DECATUR WEST STORMWATER MANAGEMENT AND MARGINAL SEWER RELIEF PIPE

DECATUR WAY ARBOR STRUCTURE

PROJECT NO. 0552-107165
FILE NAME: L008STDT.DWG
SHEET NO.
L-8

XREFs: [S_85L11, CDMS_2436, CDMS_2436_LOWELL] Images: []
Last saved by: FOGGRL Time: 3/30/2015 4:36:03 PM
pw:\\dscpwapp1:PW_XM1\0552\107165\04 Design Services NM_303\02 Civil\10 CADD\01 Working\Conceptual Design\L008STDT.dwg
©2015 CDM SMITH ALL RIGHTS RESERVED.
REUSE OF DOCUMENTS: THESE DOCUMENTS AND DESIGNS PROVIDED BY PROFESSIONAL SERVICE, INCORPORATED HEREIN, ARE THE PROPERTY OF CDM SMITH AND ARE NOT TO BE USED, IN WHOLE OR PART, FOR ANY OTHER PROJECT WITHOUT THE WRITTEN AUTHORIZATION OF CDM SMITH.

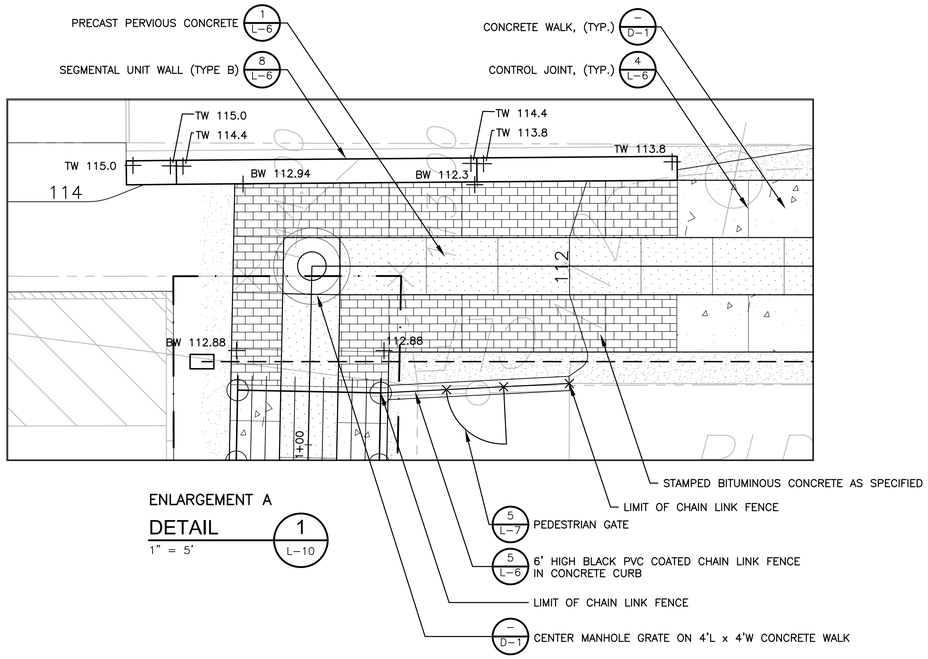

ENLARGEMENT A

DETAIL 1 / L-10

1" = 5'

LEGEND

- STAMPED BITUMINOUS CONCRETE
- CONCRETE WALK
- PRECAST PERVIOUS CONCRETE
- LOAM AND MULCH

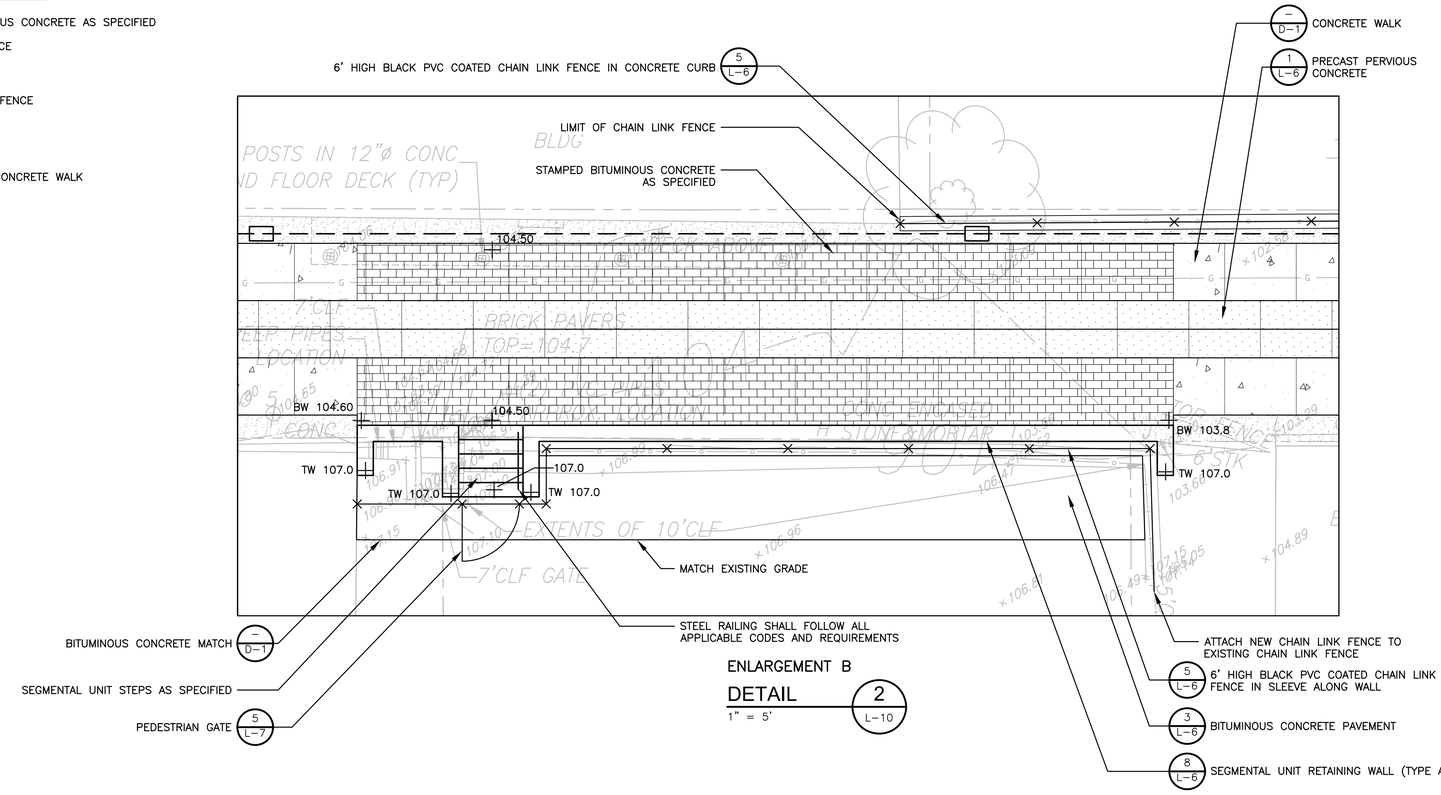

ENLARGEMENT B

DETAIL 2 / L-10

1" = 5'

MASSACHUSETTS MICHAEL A. DODSON REGISTERED ARCHITECT NO. 1607 4/30/15

REV. NO.	DATE	DRWN	CHKD	REMARKS

DESIGNED BY: M. DODSON
DRAWN BY: J. COROA
SHEET CHK'D BY: J. OLCOTT
CROSS CHK'D BY: J. DRAKE
APPROVED BY: M. DODSON
DATE: APRIL 2015

CDM Smith
670 N. Commercial St
Manchester, NH 03101
Tel: (603) 222-8300

LOWELL REGIONAL WASTEWATER UTILITY
LOWELL, MASSACHUSETTS

DECATUR WEST STORMWATER MANAGEMENT AND MARGINAL SEWER RELIEF PIPE

DECATUR WAY
SITE ENLARGEMENTS

PROJECT NO. 0552-107165
FILE NAME: L009STPL.DWG

SHEET NO.
L-9

0552-80291

XREFs: [CDMS_2436, CSTPL100-0552-81311-JAN2011, Topo_GIS_CAD, C001STWP] Images: []
Last saved by: COROAJU Time: 3/19/2015 9:51:39 AM
pw:\\dacpwopp1:PW_XM1\0552\107165\04 Design Services NM_30%\02 Civil\10 CADD\01 Working\Conceptual Design\C003STPL.dwg
©2015 CDM SMITH ALL RIGHTS RESERVED.
REUSE OF DOCUMENTS: THESE DOCUMENTS AND DESIGNS PROVIDED BY PROFESSIONAL SERVICE, INCORPORATED HEREIN, ARE THE PROPERTY OF CDM SMITH AND ARE NOT TO BE USED, IN WHOLE OR PART, FOR ANY OTHER PROJECT WITHOUT THE WRITTEN AUTHORIZATION OF CDM SMITH.