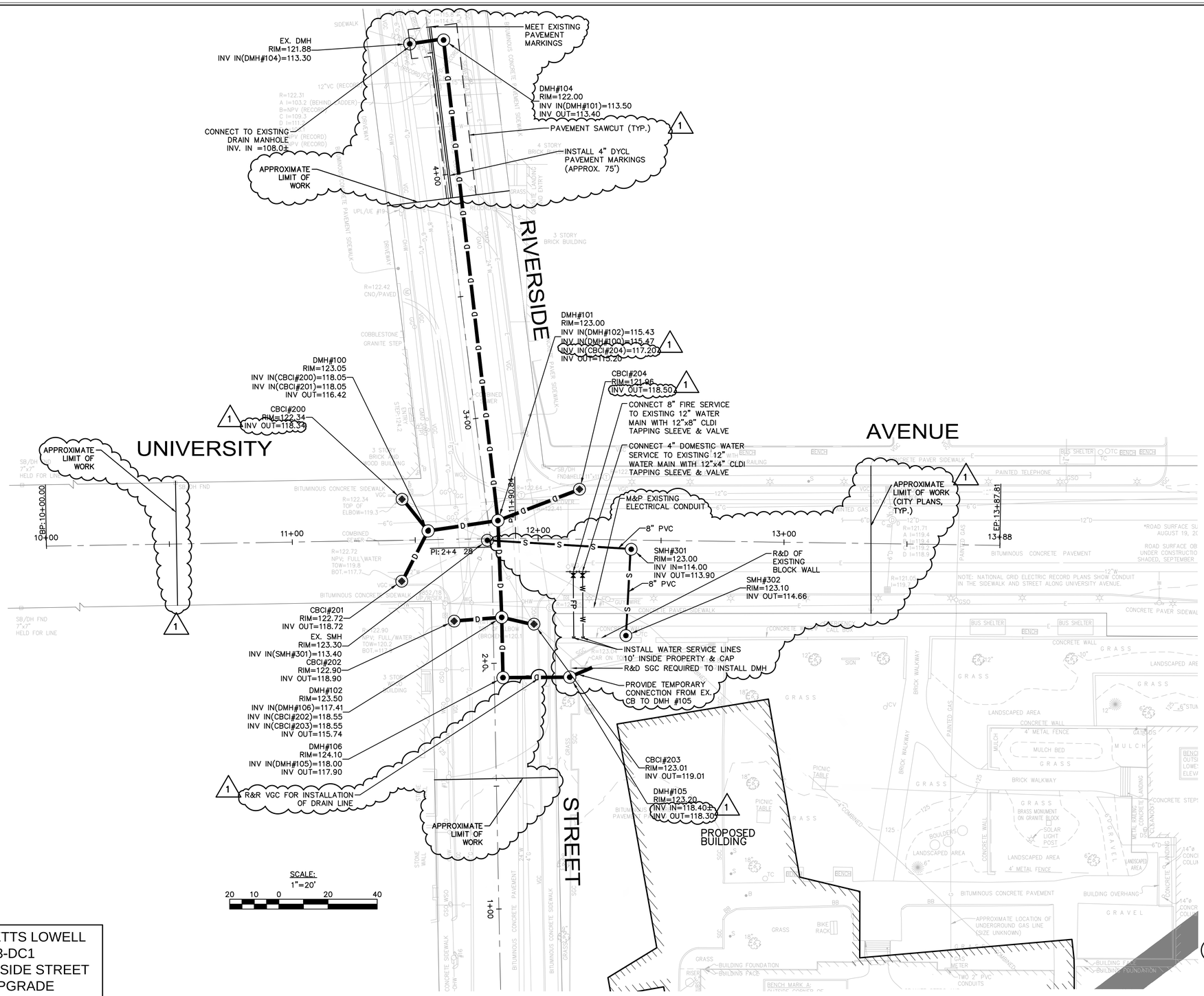

GENERAL NOTES:

1. ASSUME ALL DRAIN PIPE IS 12" RCP UNLESS NOTED OTHERWISE.
2. CONTRACTOR SHALL USE CITY OF LOWELL STANDARD FRAMES AND COVERS FOR DRAIN MANHOLES AND CITY OF LOWELL STANDARD FRAMES AND GRATES FOR CATCH BASINS.
3. CONTRACTOR TO REMOVE THE FIVE (5) EXISTING CATCH BASINS LOCATED IN THE INTERSECTION AND CAP PIPE AT BOTH ENDS.
4. REFER TO SHEET 5 FOR PROFILE OF UNIVERSITY AVENUE.
5. LIMIT OF WORK LINES TAKEN FROM TRANSPORTATION IMPROVEMENT PROJECT PLANS PROVIDED BY CITY OF LOWELL FOR RIVERSIDE STREET AT UNIVERSITY AVENUE.

ALTERNATE NO. 1

UNIVERSITY OF MASSACHUSETTS LOWELL
PROJECT NO. UML1203-DC1
UNIVERSITY AVENUE AT RIVERSIDE STREET
UTILITY INTERSECTION UPGRADE
LOWELL, MA

Nitsch Engineering
www.nitscheng.com
2 Center Plaza, Suite 430
Boston, MA 02108
T: (617) 338-0063
F: (617) 338-6472

- Civil Engineering
- Land Surveying
- Transportation Engineering
- Sustainable Site Consulting
- Planning
- GIS

NITSCH PROJECT #	9519
SCALE:	AS NOTED
DATE:	03/26/2014
PROJECT MANAGER:	W. MAHER
SURVEYOR:	A. DIOTTE
DRAFTED BY:	W. MAHER
CHECKED BY:	W. MAHER

REV.	COMMENTS	DATE
1	ADDENDUM NO. 1	4/02/14

REVISIONS

UTILITY PLAN I

SHEET NO: 3

Nitsch – P:\9519 UML Business Sch\Civil\CAD\9519cut.dwg Apr 3, 2014 10:28 AM

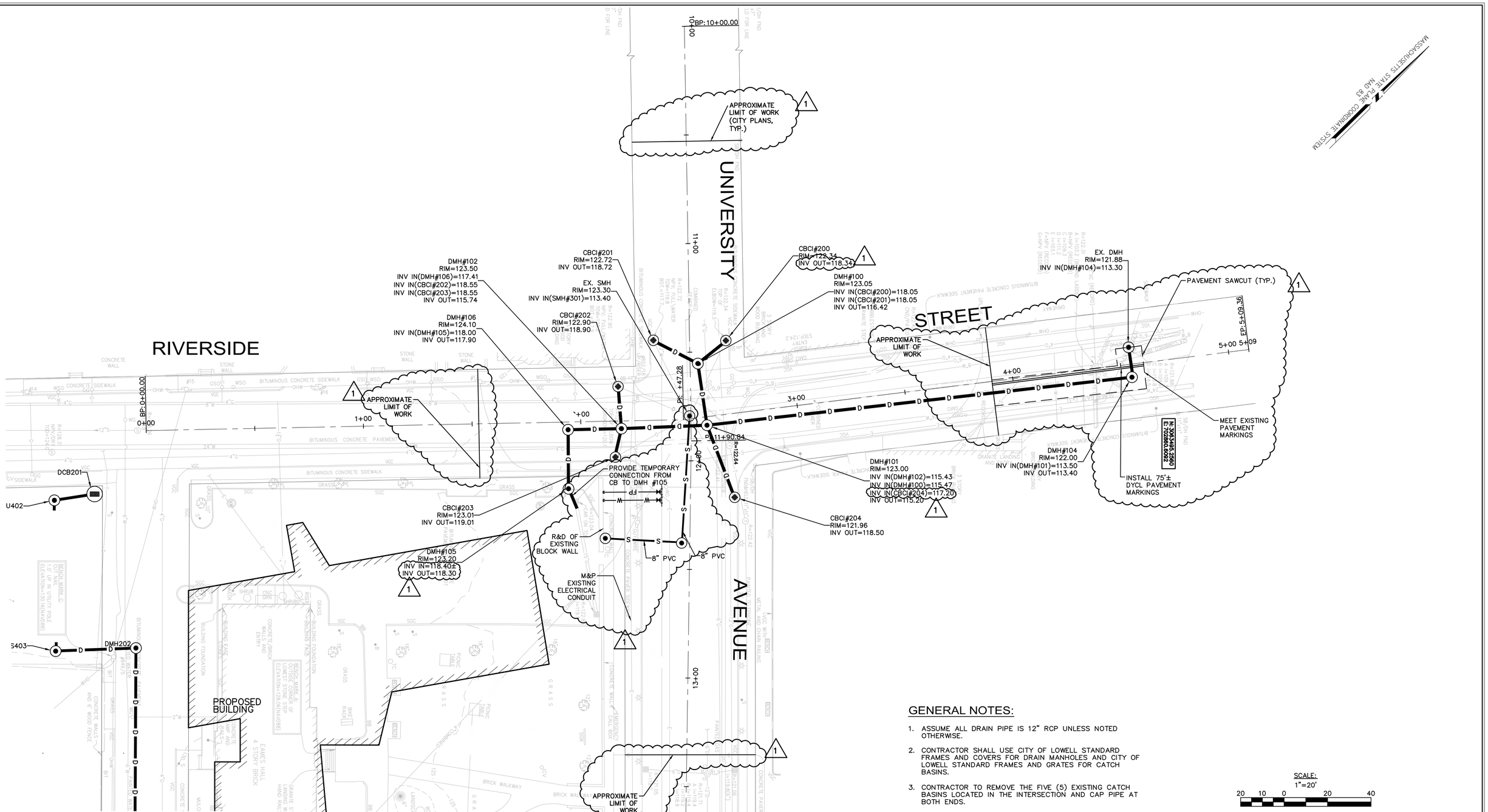

GENERAL NOTES:

1. ASSUME ALL DRAIN PIPE IS 12" RCP UNLESS NOTED OTHERWISE.
2. CONTRACTOR SHALL USE CITY OF LOWELL STANDARD FRAMES AND COVERS FOR DRAIN MANHOLES AND CITY OF LOWELL STANDARD FRAMES AND GRATES FOR CATCH BASINS.
3. CONTRACTOR TO REMOVE THE FIVE (5) EXISTING CATCH BASINS LOCATED IN THE INTERSECTION AND CAP PIPE AT BOTH ENDS.
4. REFER TO SHEET 6 FOR PROFILE OF RIVERSIDE STREET.
5. LIMIT OF WORK LINES TAKEN FROM TRANSPORTATION IMPROVEMENT PROJECT PLANS PROVIDED BY CITY OF LOWELL FOR RIVERSIDE STREET AT UNIVERSITY AVENUE.

SCALE: 1"=20'

20 10 0 20 40

UNIVERSITY OF MASSACHUSETTS LOWELL
PROJECT NO. UML1203-DC1
UNIVERSITY AVENUE AT RIVERSIDE STREET
UTILITY INTERSECTION UPGRADE
LOWELL, MA

ALTERNATE NO. 1

Nitsch Engineering
www.nitscheng.com
2 Center Plaza, Suite 430
Boston, MA 02108
T: (617) 338-0063
F: (617) 338-6472

- Civil Engineering
- Land Surveying
- Transportation Engineering
- Sustainable Site Consulting
- Planning
- GIS

NITSCH PROJECT #	9519
SCALE:	AS NOTED
DATE:	03/26/2014
PROJECT MANAGER:	W. MAHER
SURVEYOR:	A. DIOTTE
DRAFTED BY:	W. MAHER
CHECKED BY:	W. MAHER

REV.	COMMENTS	DATE
1	ADDENDUM NO. 1	4/02/14

REVISIONS

UTILITY PLAN II

SHEET NO: 4

Nitsch – P:\9519 UML Business Sch\Civil\CAD\9519cut.dwg Apr 3, 2014 11:34 AM

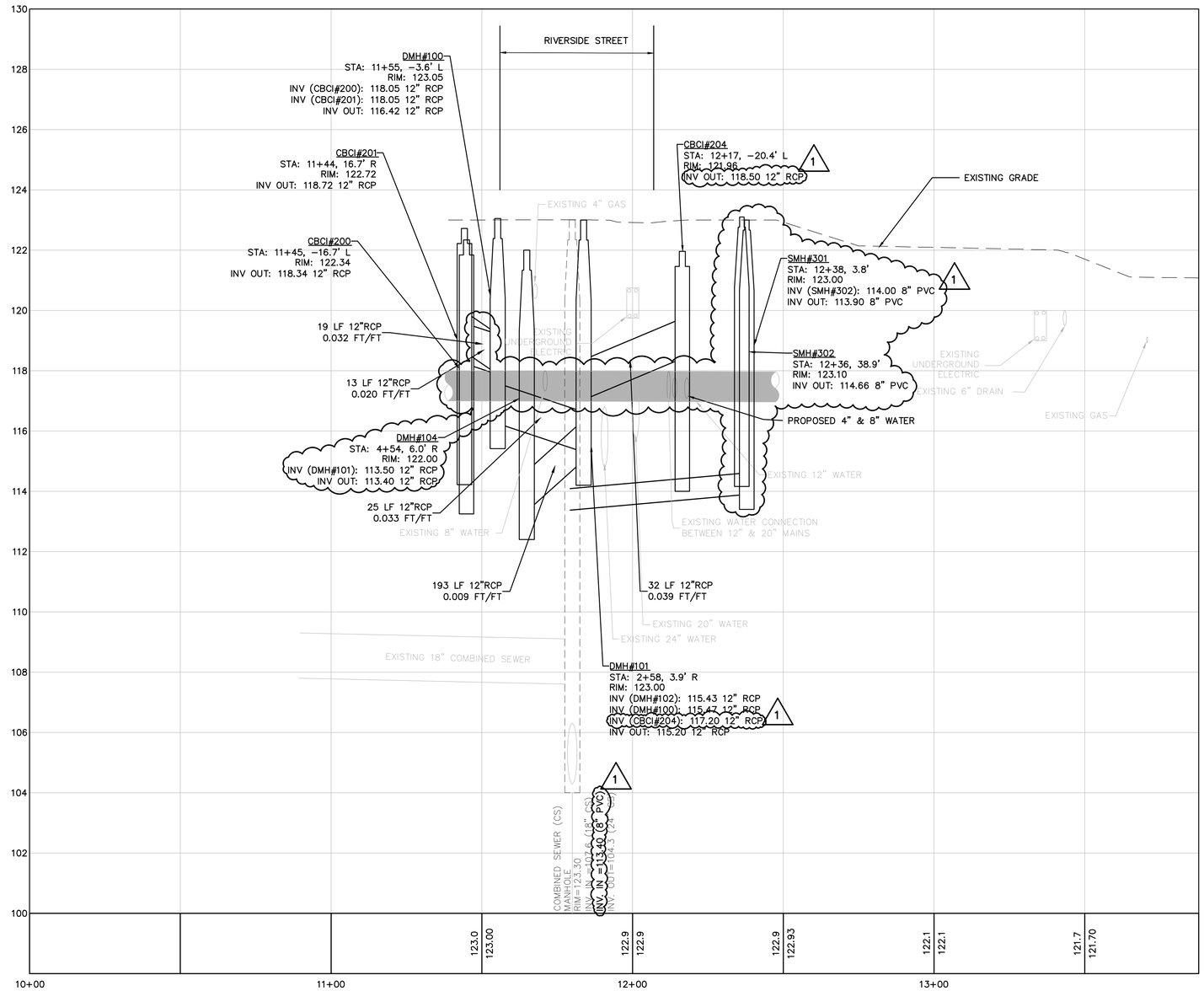

UNIVERSITY AVENUE PROFILE

GENERAL NOTES:

1. ASSUME ALL DRAIN PIPE IS 12" RCP UNLESS NOTED OTHERWISE.
2. CONTRACTOR SHALL USE CITY OF LOWELL STANDARD FRAMES AND COVERS FOR DRAIN MANHOLES AND CITY OF LOWELL STANDARD FRAMES AND GRATES FOR CATCH BASINS.
3. CONTRACTOR TO REMOVE THE FIVE (5) EXISTING CATCH BASINS LOCATED IN THE INTERSECTION AND CAP PIPE AT BOTH ENDS.
4. REFER TO SHEET 3 FOR PLAN OF UNIVERSITY AVENUE.
5. EXISTING WATERLINES ARE ASSUMED TO HAVE FIVE (5) FEET OF COVER. 1

SCALE:
1"=20'
20 10 0 20 40
2 1 0 2 4
1" = 2'

UNIVERSITY OF MASSACHUSETTS LOWELL
PROJECT NO. UML1203-DC1
UNIVERSITY AVENUE AT RIVERSIDE STREET
UTILITY INTERSECTION UPGRADE
LOWELL, MA

ALTERNATE NO. 1

Nitsch Engineering
www.nitscheng.com
2 Center Plaza, Suite 430
Boston, MA 02108
T: (617) 338-0063
F: (617) 338-6472

- Civil Engineering
- Land Surveying
- Transportation Engineering
- Sustainable Site Consulting
- Planning
- GIS

NITSCH PROJECT #	9519
SCALE:	AS NOTED
DATE:	03/26/2014
PROJECT MANAGER:	W. MAHER
SURVEYOR:	A. DIOTTE
DRAFTED BY:	W. MAHER
CHECKED BY:	W. MAHER

REV.	COMMENTS	DATE
1	ADDENDUM NO. 1	4/02/14

REVISIONS

UNIVERSITY AVENUE PLAN/PROFILE

SHEET NO:
5

4/3/2014 9:22 AM
Nitsch – P:\9519 UML Business Sch\Civil\CAD\9519cut.dwg Apr 3, 2014 9:22 AM

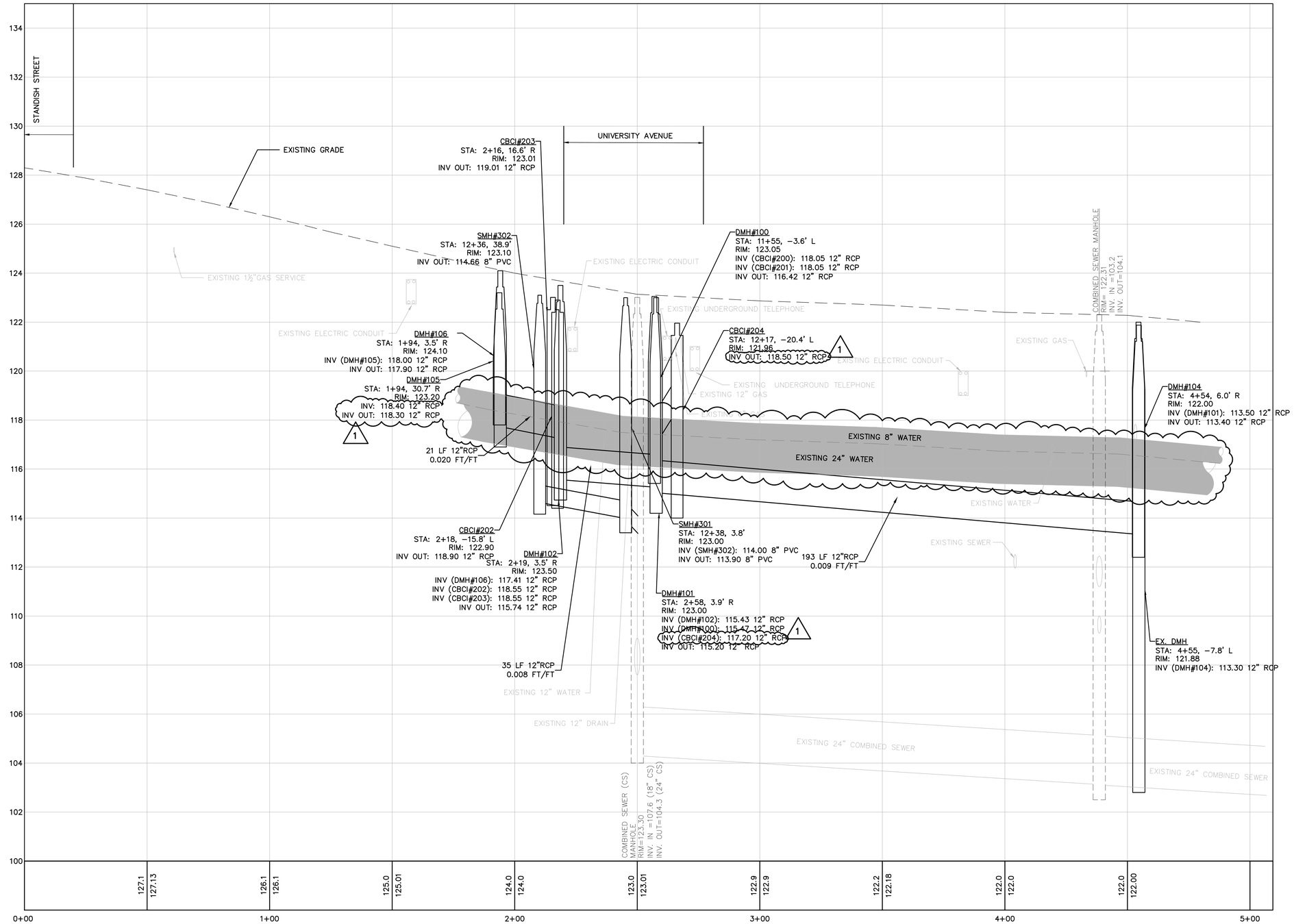

RIVERSIDE STREET PROFILE

GENERAL NOTES:

1. ASSUME ALL DRAIN PIPE IS 12" RCP UNLESS NOTED OTHERWISE.
2. CONTRACTOR SHALL USE CITY OF LOWELL STANDARD FRAMES AND COVERS FOR DRAIN MANHOLES AND CITY OF LOWELL STANDARD FRAMES AND GRATES FOR CATCH BASINS.
3. CONTRACTOR TO REMOVE THE FIVE (5) EXISTING CATCH BASINS LOCATED IN THE INTERSECTION AND CAP PIPE AT BOTH ENDS.
4. REFER TO SHEET 4 FOR PLAN OF RIVERSIDE STREET.
5. EXISTING WATERLINES ARE ASSUMED TO HAVE FIVE (5) FEET OF COVER. 1

SCALE:
1"=20'
20 10 0 20 40
2 1 0 2 4
1" = 2'

UNIVERSITY OF MASSACHUSETTS LOWELL
PROJECT NO. UML1203-DC1
UNIVERSITY AVENUE AT RIVERSIDE STREET
UTILITY INTERSECTION UPGRADE
LOWELL, MA

ALTERNATE NO. 1

Nitsch Engineering
www.nitscheng.com
2 Center Plaza, Suite 430
Boston, MA 02108
T: (617) 338-0063
F: (617) 338-6472
► Civil Engineering
► Land Surveying
► Transportation Engineering
► Sustainable Site Consulting
► Planning
► GIS

NITSCH PROJECT #	9519
SCALE:	AS NOTED
DATE:	03/26/2014
PROJECT MANAGER:	W. MAHER
SURVEYOR:	A. DIOTTE
DRAFTED BY:	W. MAHER
CHECKED BY:	W. MAHER

REV.	COMMENTS	DATE
1	ADDENDUM NO. 1	4/02/14

REVISIONS

RIVERSIDE STREET PLAN/ PROFILE

SHEET NO: 6

4/3/2014 9:29 AM
Nitsch – P:\9519 UML Business Sch\Civil\CAD\9519cut.dwg Apr 3, 2014 9:29 AM

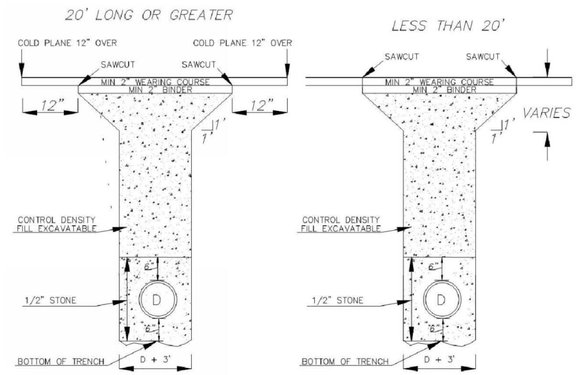

CITY OF LOWELL STANDARD TRENCH DETAIL FOR DRAIN PIPE

NOT TO SCALE

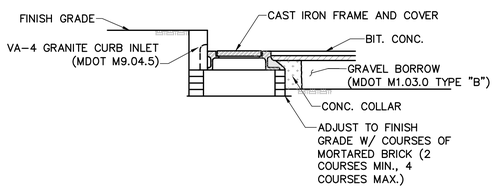

CATCH BASIN CURB DETAIL

NOT TO SCALE

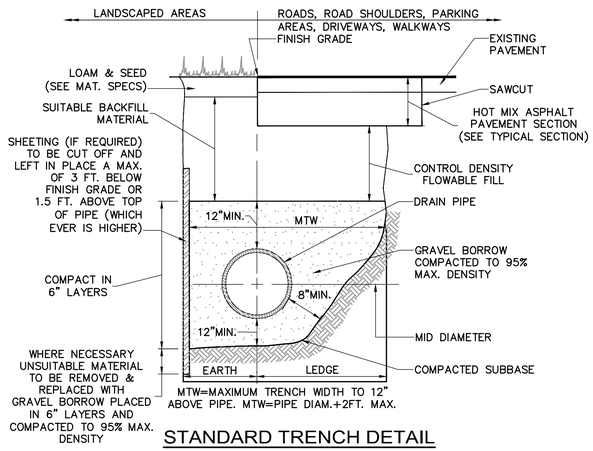

STANDARD TRENCH DETAIL FOR DRAIN PIPE

NOT TO SCALE

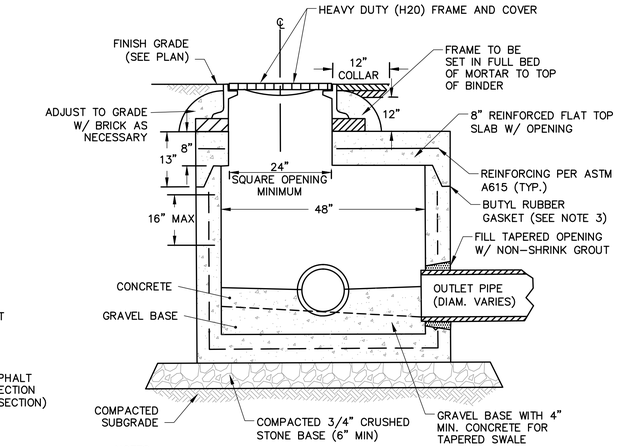

NOTES:

1. PRECAST REINFORCED CONCRETE SHALL BE CERTIFIED FOR H-20 LOADING.
2. PRECAST CONCRETE CONIC RISER SECTIONS MAY BE USED WHERE NECESSARY.
3. ALL CONNECTED JOINTS SHALL BE SEALED WITH PREFORMED BUTYL RUBBER AND INSTALLED IN ACCORDANCE WITH THE SPECIFICATIONS.
4. OUTSIDE FACE OF ALL STRUCTURE JOINTS SHALL BE FILLED WITH NON-SHRINK MORTAR.
5. "V" KNOCKOUTS SHALL BE PROVIDED FOR ALL PIPES WITH 2" MAX CLEARANCE TO OUTSIDE OF PIPE.
6. FRAME AND COVER SHALL BE SET IN FULL MORTAR BED AND ADJUSTED TO GRADE WITH REINFORCED CONCRETE RISER OR CLAY BRICK AND MORTAR (2 BRICK COURSE TYP., 5 BRICK COURSE MAX).
7. FRAME AND COVER MAY BE CENTERED ON STRUCTURE AS NECESSARY.

PRECAST DRAINAGE MANHOLE

NOT TO SCALE

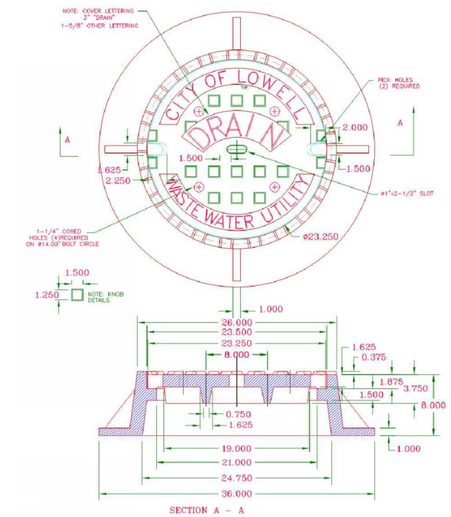

LOWELL STANDARD DRAIN MANHOLE RING AND COVER DETAIL

NOT TO SCALE

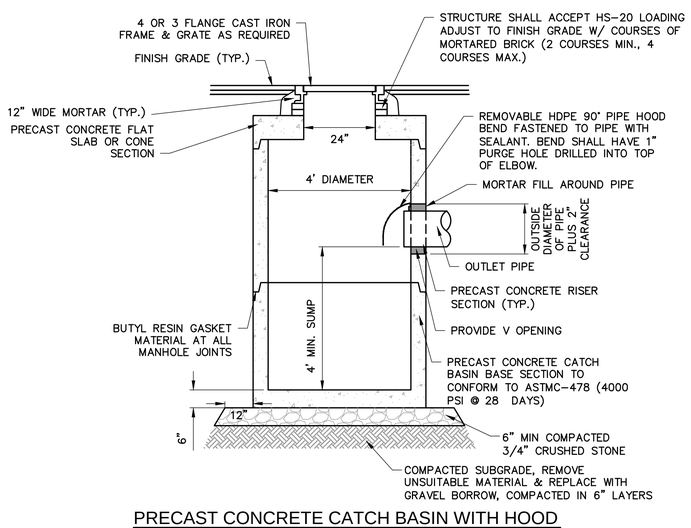

PRECAST CONCRETE CATCH BASIN WITH HOOD

NOT TO SCALE

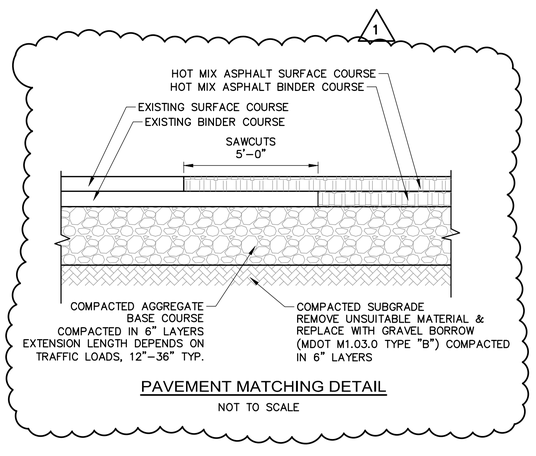

PAVEMENT MATCHING DETAIL

NOT TO SCALE

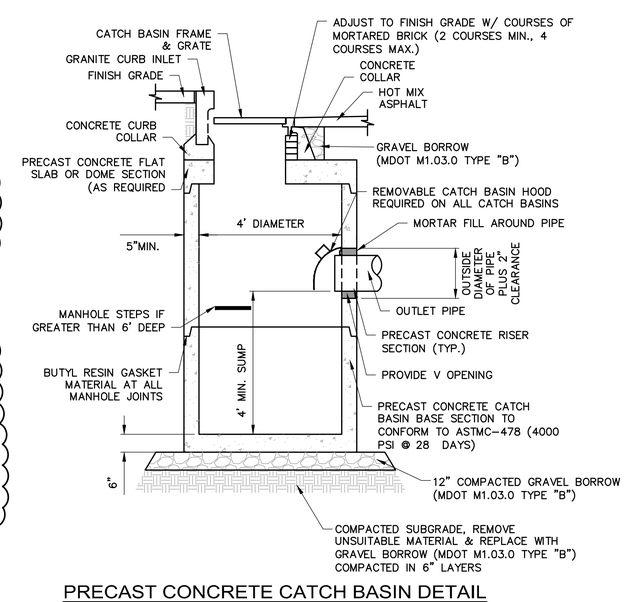

PRECAST CONCRETE CATCH BASIN DETAIL (W/ GRANITE CURB INLET)

NOT TO SCALE

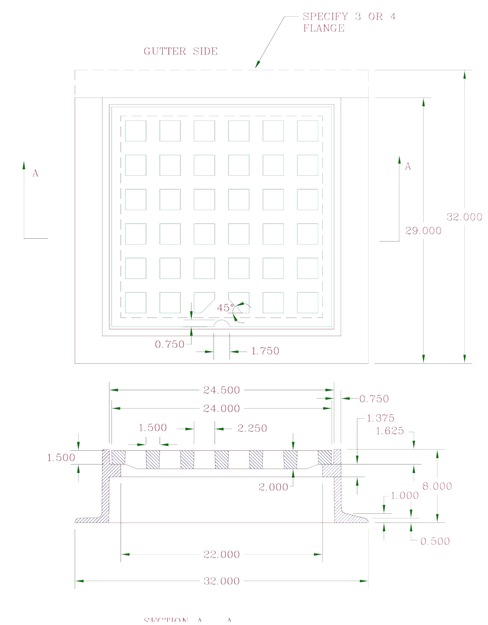

LOWELL CATCH BASIN FRAME & GRATE DETAIL

NOT TO SCALE

ALTERNATE NO. 1

UNIVERSITY OF MASSACHUSETTS LOWELL
PROJECT NO. UML1203-DC1
UNIVERSITY AVENUE AT RIVERSIDE STREET
UTILITY INTERSECTION UPGRADE
LOWELL, MA

Nitsch Engineering
www.nitscheng.com
2 Center Plaza, Suite 430
Boston, MA 02108
T: (617) 338-0063
F: (617) 338-6472

- Civil Engineering
- Land Surveying
- Transportation Engineering
- Sustainable Site Consulting
- Planning
- GIS

NITSCH PROJECT #	9519
SCALE:	AS NOTED
DATE:	03/26/2014
PROJECT MANAGER:	W. MAHER
SURVEYOR:	A. DIOTTE
DRAFTED BY:	W. MAHER
CHECKED BY:	W. MAHER

REV.	COMMENTS	DATE
1	ADDENDUM NO. 1	4/02/14

REVISIONS

CONSTRUCTION DETAILS (DRAIN)

SHEET NO: 8

4/3/2014 9:07 AM
Nitsch - P:\9519 UML Business Sch\Civil\CAD\9519CDT.dwg Apr 3, 2014 9:07 AM