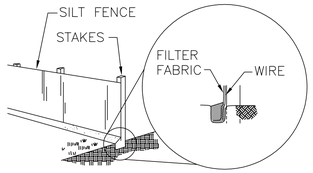

INSTALLATION PROCEDURE:

1. LAY OUT A SUITABLE FENCE LINE AND SET POSTS ALONG IT. ON SLOPES, ALIGN THE FENCE ALONG THE CONTOUR AS CLOSELY AS POSSIBLE. IN SMALL SWALES, CURVE THE FENCE LINE UPSTREAM AT THE SIDES TO DIRECT THE FLOW TOWARD THE MIDDLE OF THE FENCE. THE SIDES SHOULD BE HIGHER THAN THE CENTER AS ILLUSTRATED. SPACE POSTS A MAXIMUM OF 10 FT. APART AND DRIVE THEM AT LEAST 12 IN. INTO THE GROUND.
2. FASTEN THE FILTER FABRIC TO THE UPHILL SIDE OF THE FENCE POSTS, AND EXTEND IT 6 TO 8 IN. INTO THE TRENCH. THE HEIGHT OF THE FENCE SHOULD NOT EXCEED 36 IN. DO NOT STAPLE FABRIC ONTO TREES. CUT THE FILTER FABRIC FROM A CONTINUOUS ROLL TO AVOID THE USE OF JOINTS. WHEN JOINTS ARE NECESSARY, SPLICE THE FILTER CLOTH AT A SUPPORT POST, WITH A MINIMUM 6 IN. OVERLAP, AND SECURELY FASTEN BOTH ENDS TO THE POST.
3. BACKFILL THE TRENCH OVER THE TOE OF THE FABRIC AND COMPACT THE SOIL.

TEMPORARY SILT FENCE

SCALE: NO TO SCALE

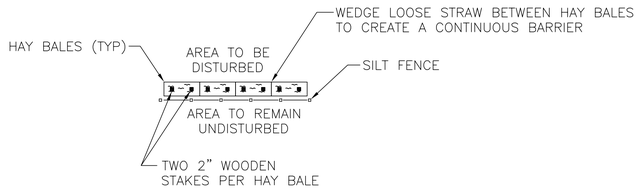

PLAN

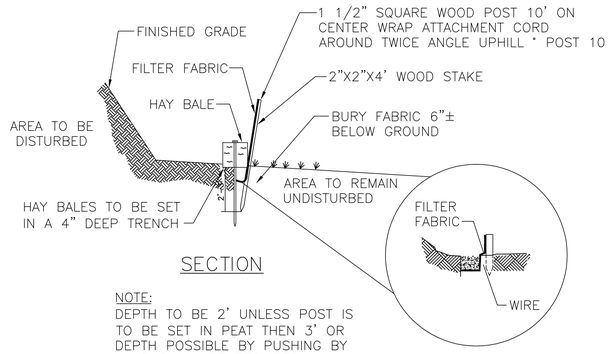

SECTION

NOTE:
DEPTH TO BE 2' UNLESS POST IS TO BE SET IN PEAT THEN 3' OR DEPTH POSSIBLE BY PUSHING BY HAND SHALL BE REQUIRED.

SEDIMENTATION BARRIER

SCALE: NO TO SCALE

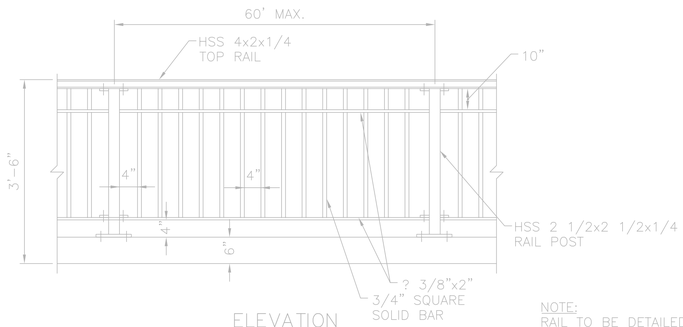

ELEVATION

NOTE:
RAIL TO BE DETAILED IN PLAN TO BUTT INTO END OF BRIDGE RAIL OR ADJACENT RAIL AT RETAINING WALLS WITH A MAXIMUM HORIZONTAL OPENING OF 3 1/2".

RAILING DETAIL

SCALE: NO TO SCALE

(OTHER CONTRACT)

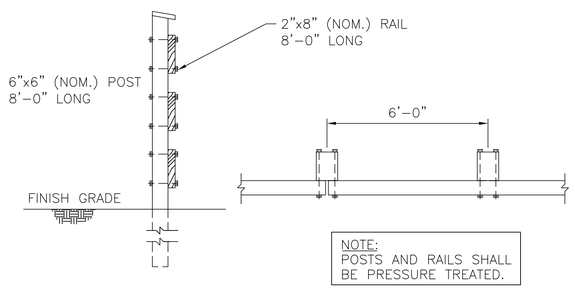

NOTE:
POSTS AND RAILS SHALL BE PRESSURE TREATED.

WOODEN RAIL FENCE DETAIL

SCALE: NO TO SCALE

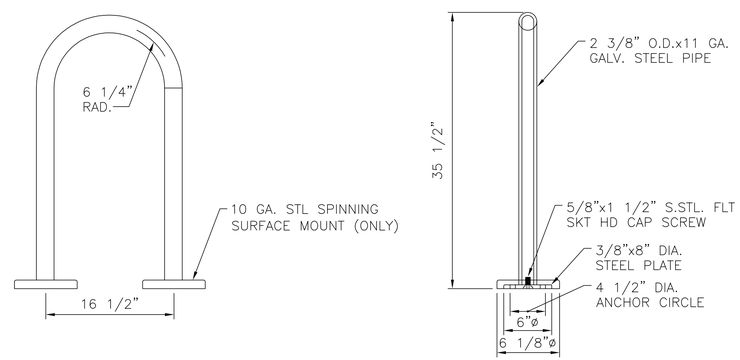

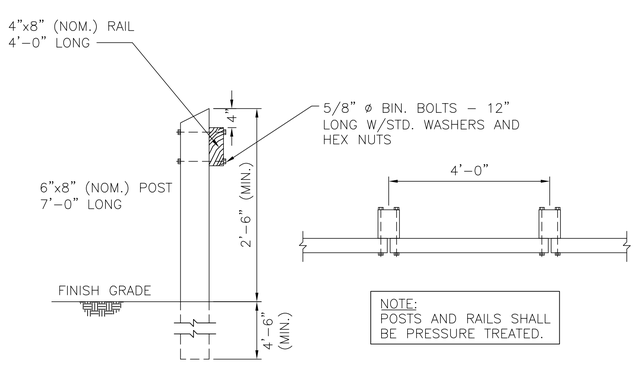

NOTE:
POSTS AND RAILS SHALL BE PRESSURE TREATED.

WOODEN GUARD RAIL DETAIL

SCALE: NO TO SCALE

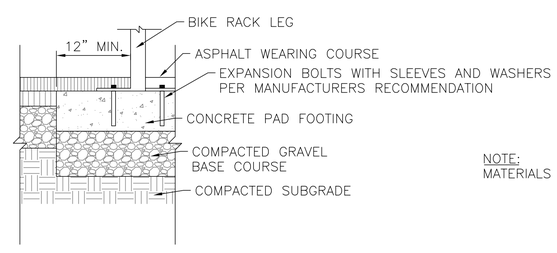

NOTE:
MATERIALS SHALL MATCH PARK BENCH.

BICYCLE RACK DETAIL

SCALE: NO TO SCALE

REV	DESCRIPTION	DRN	CHK	DATE (M/D/Y)
2	REVISE CONTRACT STATIONING			4/28/2014
1	MINOR REVISIONS			2/6/2014

VERIFY SCALE IF PLAN SHEET IS REDUCED
1 INCH

DRW BY: HBF
DES BY: MOH
CHK BY: MOH
APP BY: MOH

GREATER LOWELL ENGINEERING ASSOCIATES, LLC
ARCHITECTS • LAND SURVEYORS • CIVIL ENGINEERS
219 JACKSON STREET • STUDIO 114
LOWELL, MA 01852
978-604-5576

LOWELL, MASSACHUSETTS
LOWELL – CONCORD RIVER GREENWAY
PHASE 3A – CENTENNIAL APARTMENTS TO ROGERS ST.

TYPICAL DETAILS

DRAWING NUMBER C-501

FILE NAME: G:\Greater Lowell Engineering Associates\GL 130301 – Concord River\2013-12-01_Walkway\Civil\C-103-04.dwg LAYOUT NAME: C-501 PLOTTED: Wednesday, April 30, 2014 – 12:29pm USER: Marko