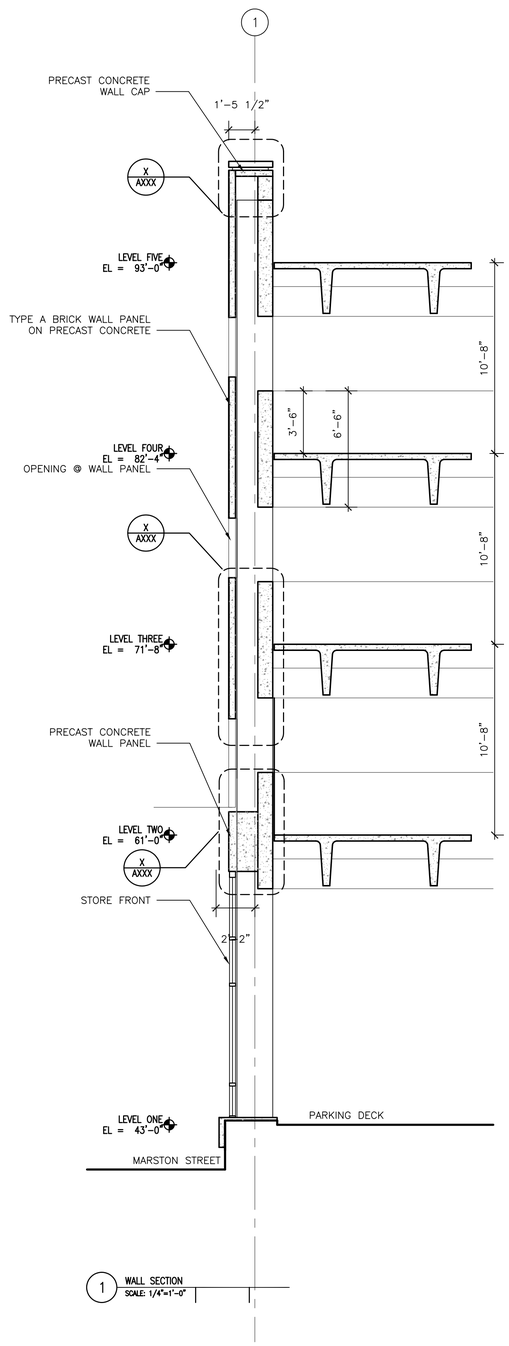

1 WALL SECTION
SCALE: 1/4"=1'-0"

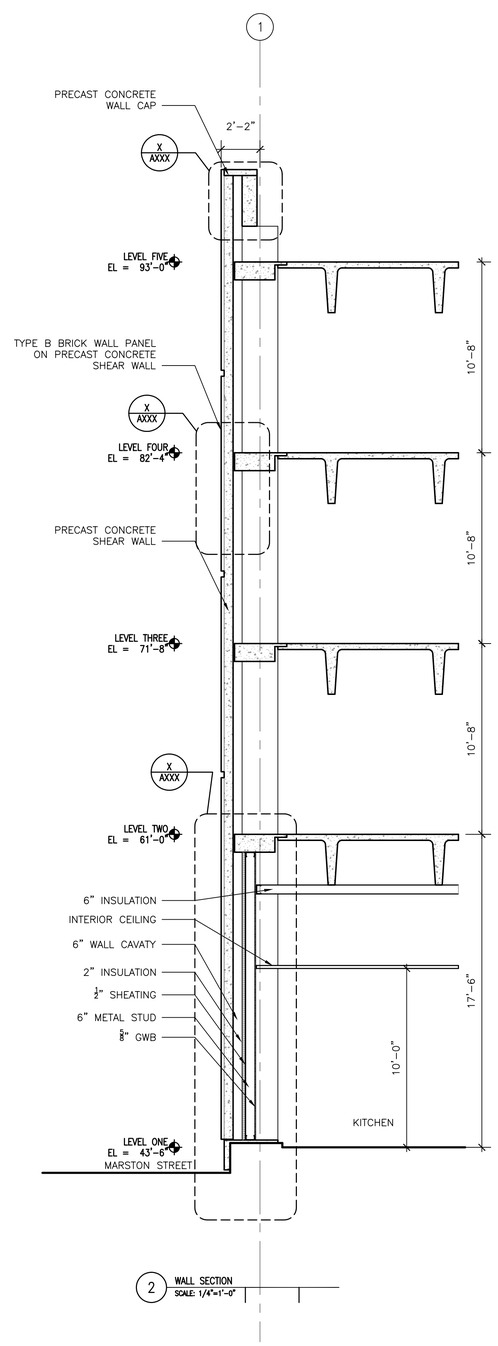

2 WALL SECTION
SCALE: 1/4"=1'-0"

60% SUBMITTAL
May 2, 2005

JAM Parking Structure

101-115 Middlesex St.

City of Lowell, MA

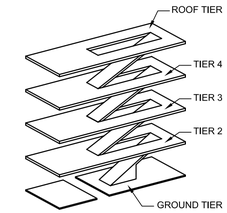

Civil/Structural:
Parsons Brinckerhoff Quade & Douglas, Inc.
75 Arlington Street
Boston, MA 02116
Tel: 617-426-7330
Fax: 617-482-0642

Architecture:
Fennick McCredie Architecture, Ltd.

Survey:
Judith Nitsch Engineering

Cost Estimating:
Hanscomb, Faithful & Gould

Code Compliance:
Robert W. Sullivan, Inc.

Landscape Architecture:
Pressley Associates, Inc.

No.	Date	Revision

Job No.:	18913A
Drawn By:	DWN
Checked By:	CHK
Date:	5/2/05
Scale:	

KEY PLAN

ARCHITECTURAL WALL SECTIONS

A802