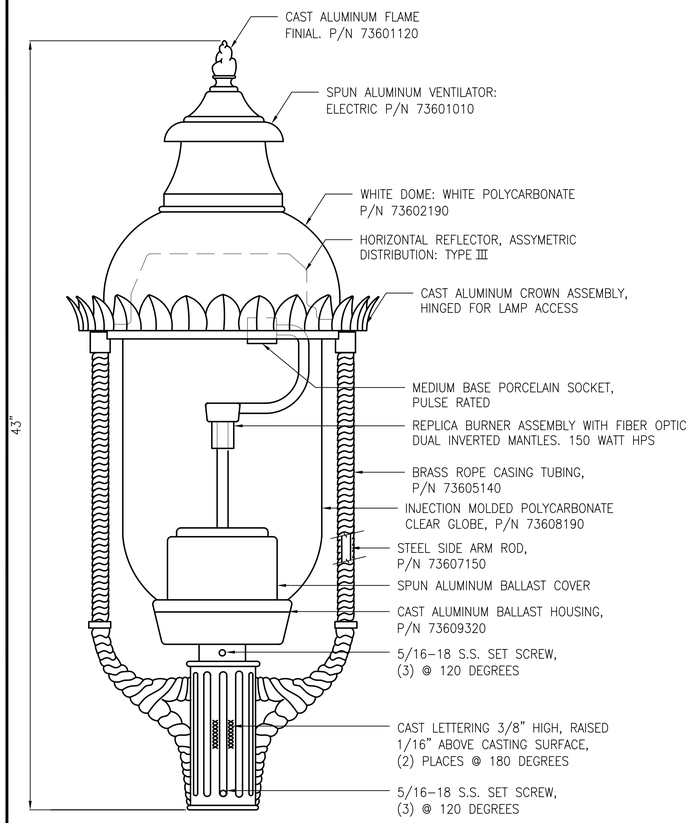

LUMINAIRE DETAIL

NTS

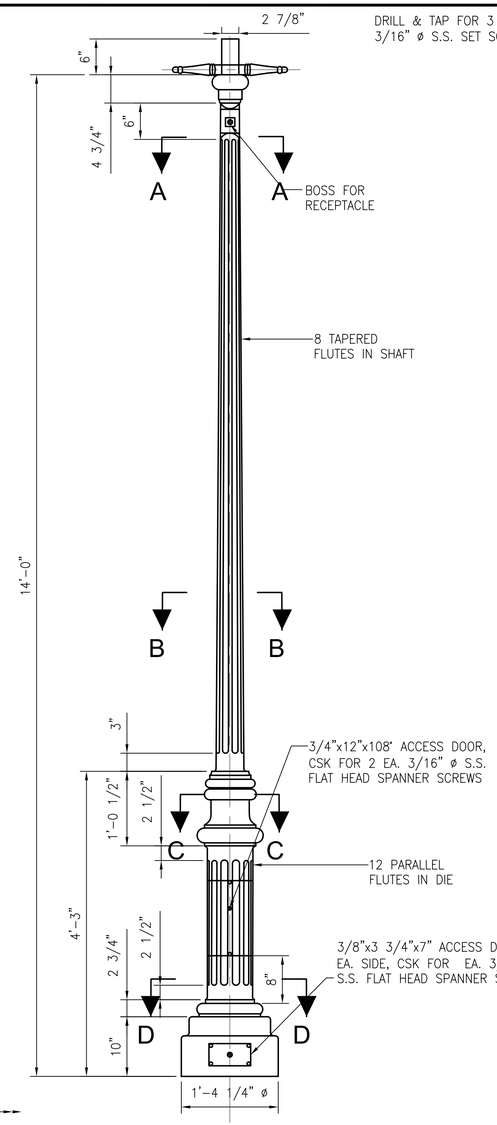

ELEVATION

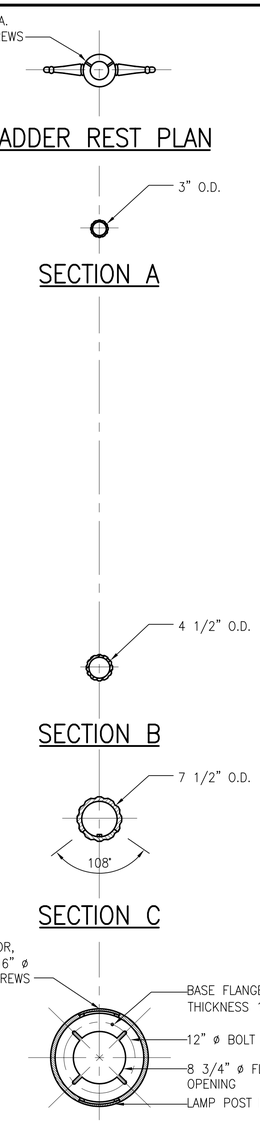

LOWELL DOWNTOWN HISTORIC DISTRICT STANDARD MUNICIPAL LAMP POST

SCALE: NTS

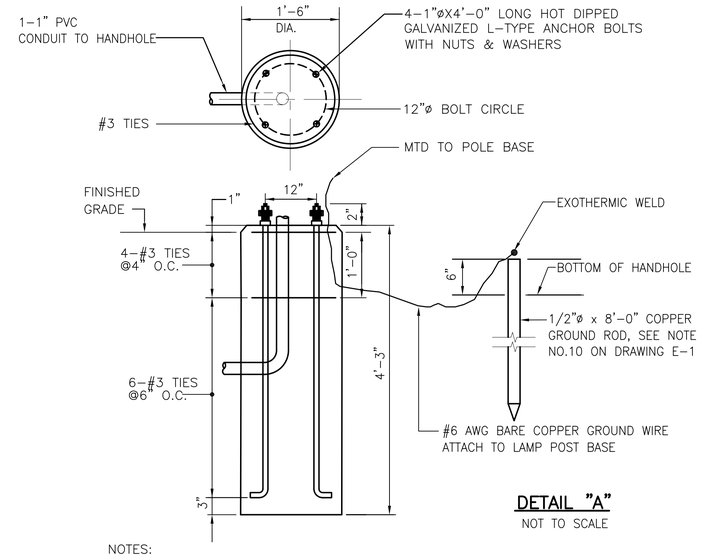

DETAIL "A"

NOT TO SCALE

NOTES:

1) CONCRETE COMPRESSIVE STRENGTH AT 28 DAYS, F'c=3000 psi (Min.)
2. THE CONTRACTOR SHALL VERIFY WITH THE POLE MANUFACTURER THAT THE FOUNDATION BOLT POSITIONS ARE ACCURATE.

CONCRETE BASE

NOT TO SCALE

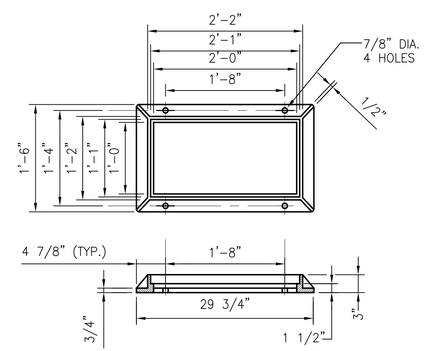

HANDHOLE FRAME

NOT TO SCALE

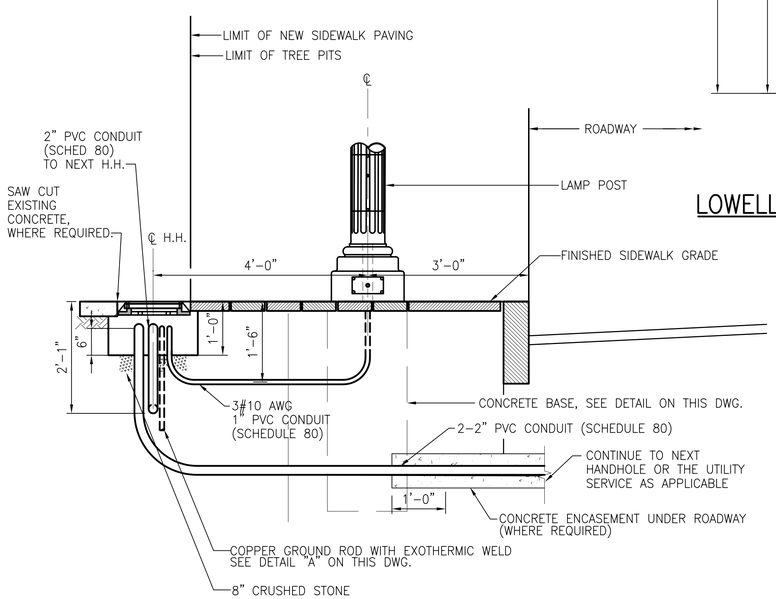

UNDERGROUND ELECTRIC DETAIL

SCALE: 3/4"=1'-0"

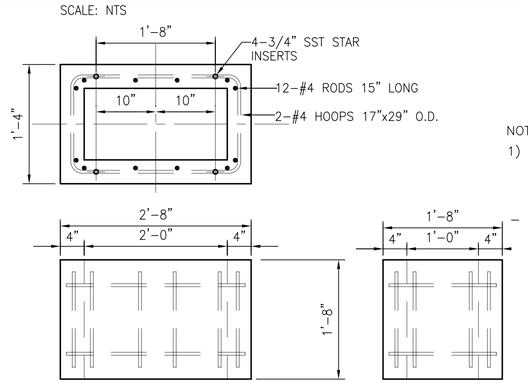

CONCRETE HANDHOLE

NOT TO SCALE

NOTES:

1) SEE DWG E-1 FOR ELECTRICAL NOTES AND SYMBOLS.

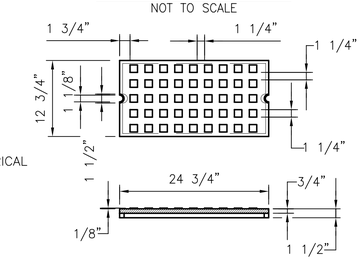

HANDHOLE COVER

NOT TO SCALE

60% SUBMITTAL
May 2, 2005

JAM Parking Structure

101-115 Middlesex St.

City of Lowell, MA

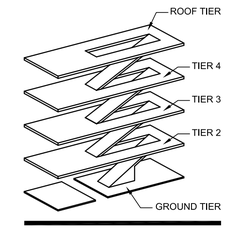

Civil/Structural:
Parsons Brinckerhoff Quade & Douglas, Inc.
75 Arlington Street
Boston, MA 02116
Tel: 617-426-7330
Fax: 617-482-0642

Architecture:
Fennick McCredie Architecture, Ltd.

Survey:
Judith Nitsch Engineering

Cost Estimating:
Hanscomb, Faithful & Gould

Code Compliance:
Robert W. Sullivan, Inc.

Landscape Architecture:
Pressley Associates, Inc.

No.	Date	Revision

Job No.:	18913A
Drawn By:	OAF
Checked By:	JMC
Date:	5/2/05
Scale:	

KEY PLAN

ELECTRICAL LIGHTING DETAILS SHEET 1 OF 2

E-20