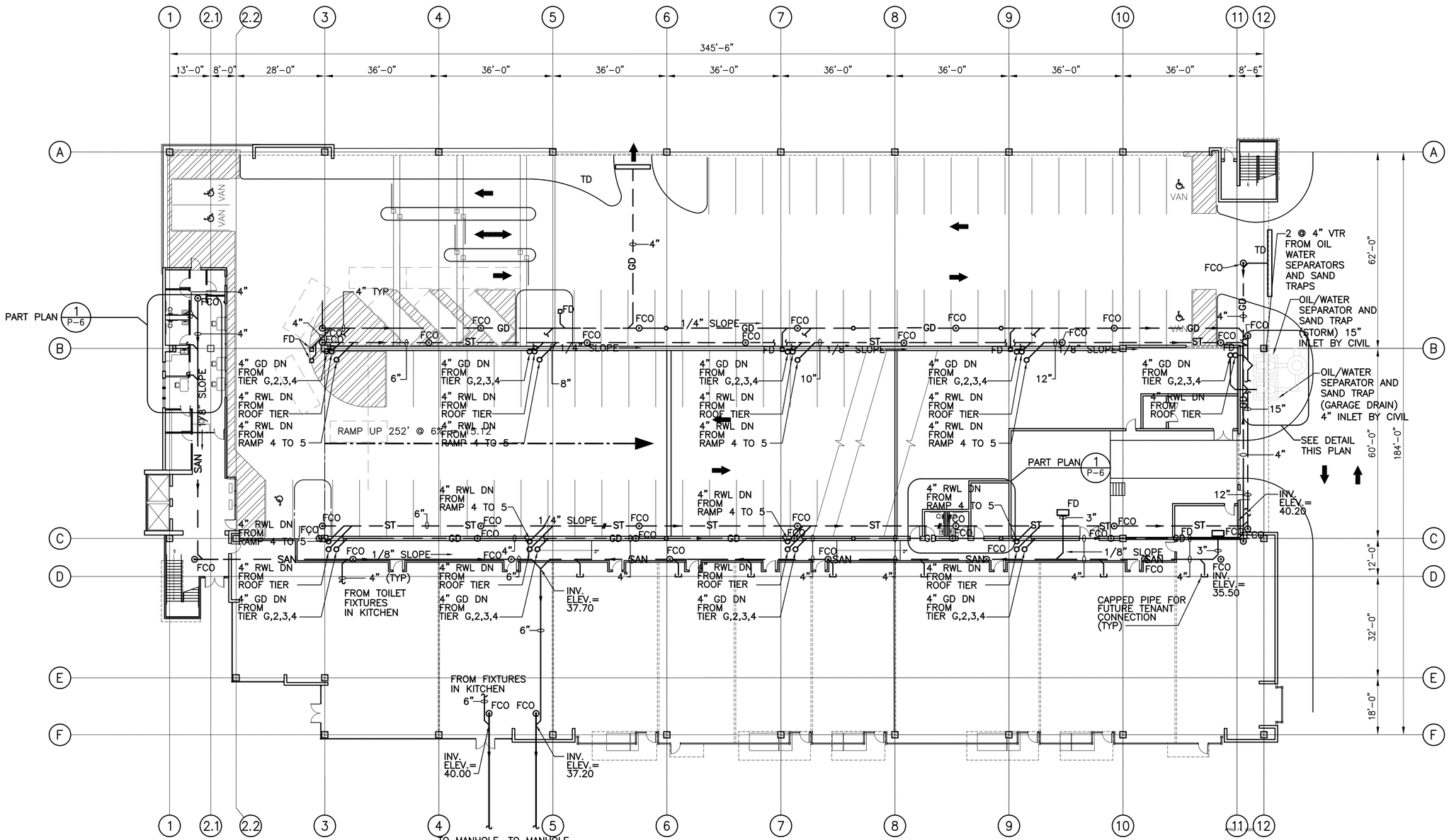

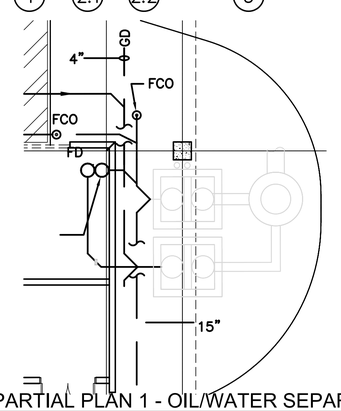

PARTIAL PLAN 1 - OIL/WATER SEPARATOR ARRANGEMENT

SCALE: 1/4"=1'-0"

NOTES:

1. TENANTS SANITARY DRAIN MUST BE FLUSH WITH THE FLOOR (WITHIN SPACE) FOR FUTURE CONNECTION.
2. GARAGE DRAIN–GD COLLECTS WASH WASTE FROM THE GARAGE, THE WASTE COLLECTS THROUGH FLOOR AND TRENCH DRAINS.
3. SANITARY DRAINS COLLECTS WASTE FROM TOILET, KITCHEN, JANITOR ROOMS AND CERTAIN FLOOR DRAINS.
4. INSTALL CLEAN OUTS EVERY 50' ON STORM, GARAGE AND SANITARY DRAINS.
5. ALL VERTICAL STORM FEDERS AND GARAGE DRAINS ARE 4" DIAMETER.

16 8 0 16 32

SCALE: 1/16" = 1'-0"

60% SUBMITTAL
May 2, 2005

JAM Parking Structure

101-115 Middlesex St.

City of Lowell, MA

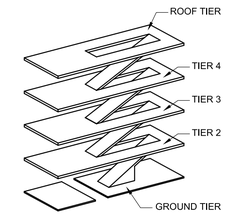

Civil/Structural:
Parsons Brinckerhoff Quade & Douglas, Inc.
75 Arlington Street
Boston, MA 02116
Tel: 617-426-7330
Fax: 617-482-0642

Architecture:
Fennick McCredie Architecture, Ltd.

Survey:
Judith Nitsch Engineering

Cost Estimating:
Hanscomb, Faithful & Gould

Code Compliance:
Robert W. Sullivan, Inc.

Landscape Architecture:
Pressley Associates, Inc.

No.	Date	Revision

Job No.:	18913A
Drawn By:	KWM
Checked By:	JD
Date:	5/2/05
Scale:	1"=16'-0"

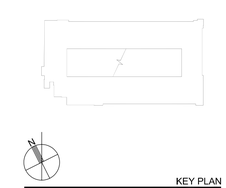

KEY PLAN

PLUMBING - PLAN GROUND TIER - UNDERGROUND

P-02