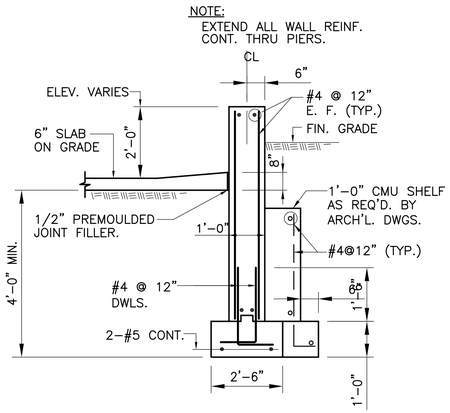

SECTION 1
SCALE: 1/2"=1'-0"

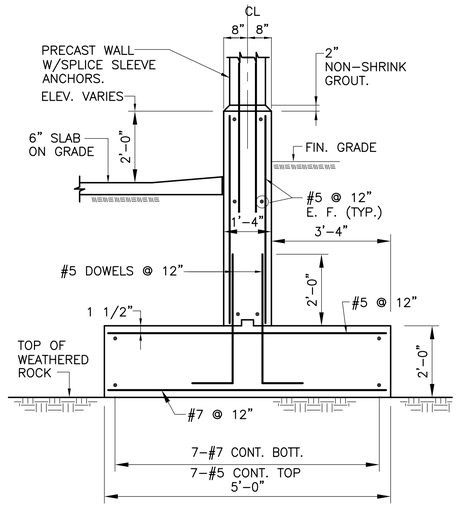

SECTION 2
SCALE: 1/2"=1'-0"

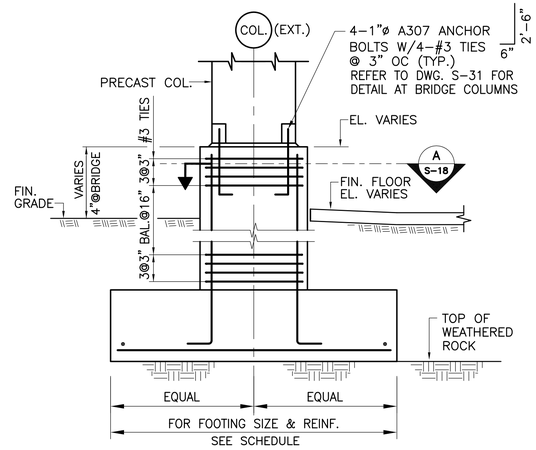

SECTION 4
SCALE: 1/2"=1'-0"

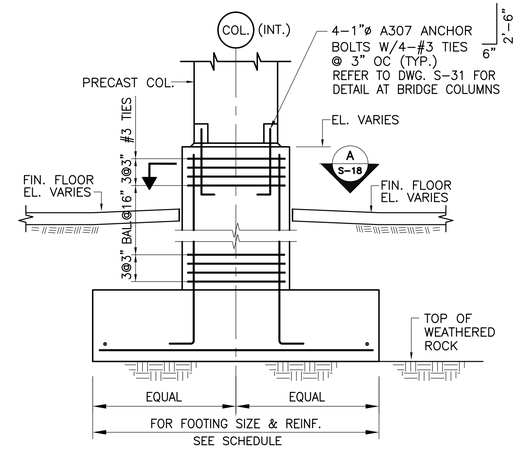

SECTION 5
SCALE: 1/2"=1'-0"

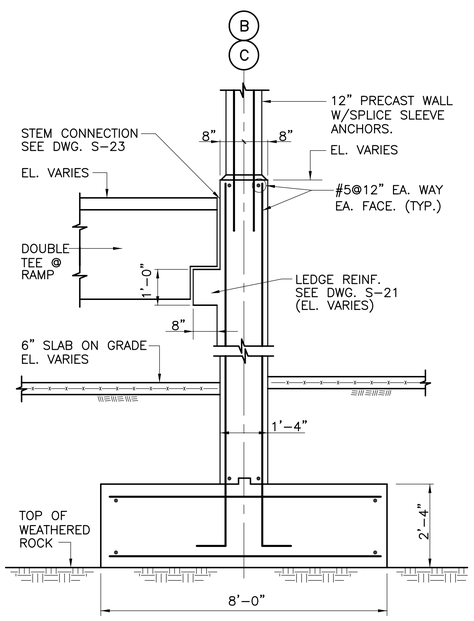

SECTION 6
SCALE: 1/2"=1'-0"

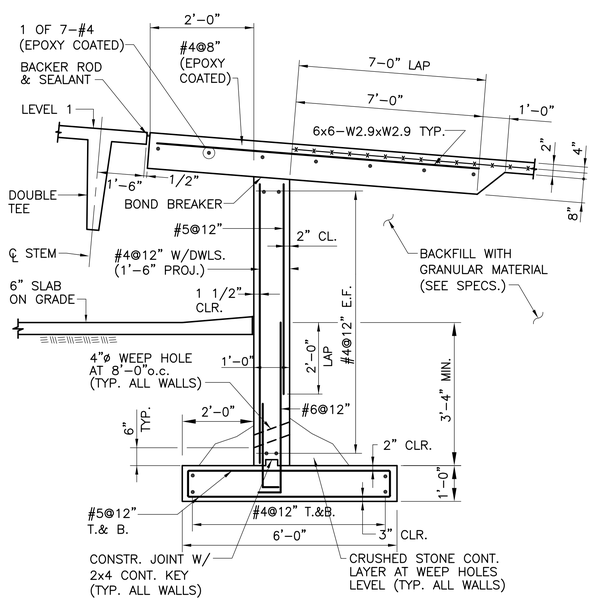

SECTION 7
SCALE: 1/2"=1'-0"

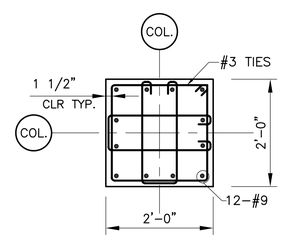

AT PIER

SECTION A
SCALE: 1/2"=1'-0"
S-18

FOOTING SCHEDULE

FOOTING TYPE	FOOTING SIZE	REINFORCEMENT	BOTTOM OF FOOTING BELOW EXIST. GRADE
F1	8'-6"x8'-6"x2'-6" DP.	12-#8 EA. WAY BOTT.	12.0'
F2	8'-6"x8'-6"x2'-6" DP.	12-#8 EA. WAY BOTT.	6.0'
F3	9'-0"x9'-0"x2'-6" DP.	12-#8 EA. WAY BOTT.	12.0'
F4	9'-0"x9'-0"x2'-6" DP.	12-#8 EA. WAY BOTT.	8.0'
F5	7'-0"x7'-0"x2'-0" DP.	9-#8 EA. WAY BOTT.	9.0'
F6	6'-0"x6'-0"x2'-0" DP.	9-#6 EA. WAY BOTT.	11.0'
F7	5'-0"x5'-0"x1'-6" DP.	5-#6 EA. WAY TOP 5-#6 EA. WAY BOTT.	11.0'
F8	8'-0"x8'-0"x2'-6" DP	12-#8 EA. WAY BOTT.	6.0'

60% SUBMITTAL
May 2, 2005

JAM Parking Structure

101-115 Middlesex St.

City of Lowell, MA

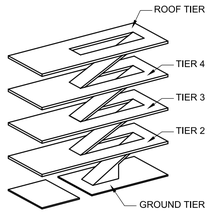

Civil/Structural:
Parsons Brinckerhoff Quade & Douglas, Inc.
75 Arlington Street
Boston, MA 02116
Tel: 617-426-7330
Fax: 617-482-0642

Architecture:
Fennick McCredie Architecture, Ltd.

Survey:
Judith Nitsch Engineering

Cost Estimating:
Hanscomb, Faithful & Gould

Code Compliance:
Robert W. Sullivan, Inc.

Landscape Architecture:
Pressley Associates, Inc.

No.	Date	Revision

Job No.:	18913A
Drawn By:	B.J.D.
Checked By:	C.H.B.
Date:	5/2/05
Scale:	

KEY PLAN

STRUCTURAL
FOUNDATION DETAILS 1

S-14