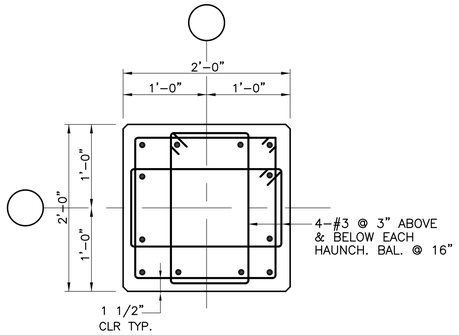

2'-0"x2'-0" COLUMNS

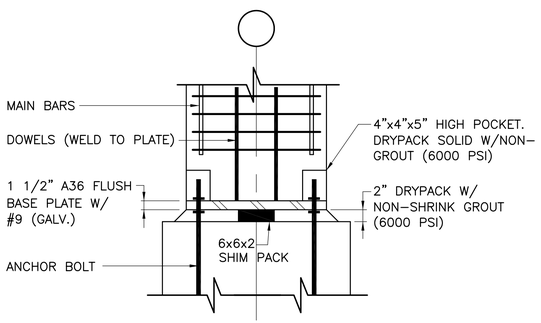

TYP. COLUMN BASE ELEVATION

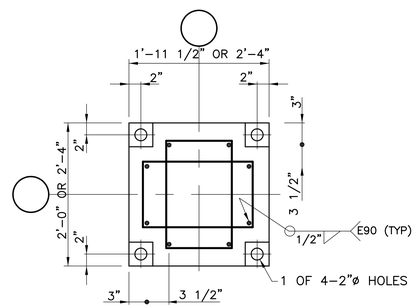

TYP. COLUMN BASE PLAN

DETAIL "D"
SCALE: 1"=1'-0"

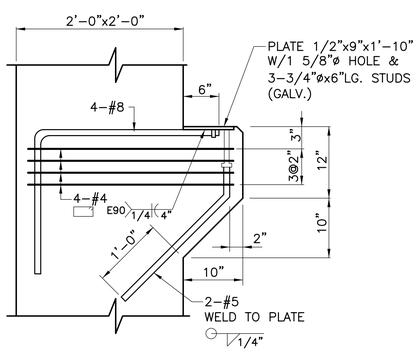

DETAIL "E" @ INVERTED "T"
SCALE: 1"=1'-0"

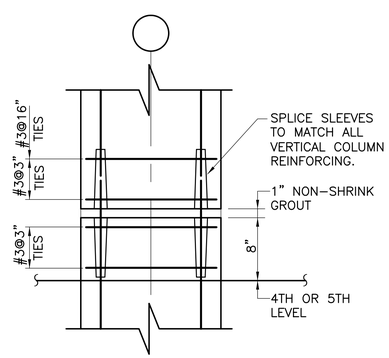

TYP. COLUMN SPLICE DETAIL
SCALE: 1"=1'-0"

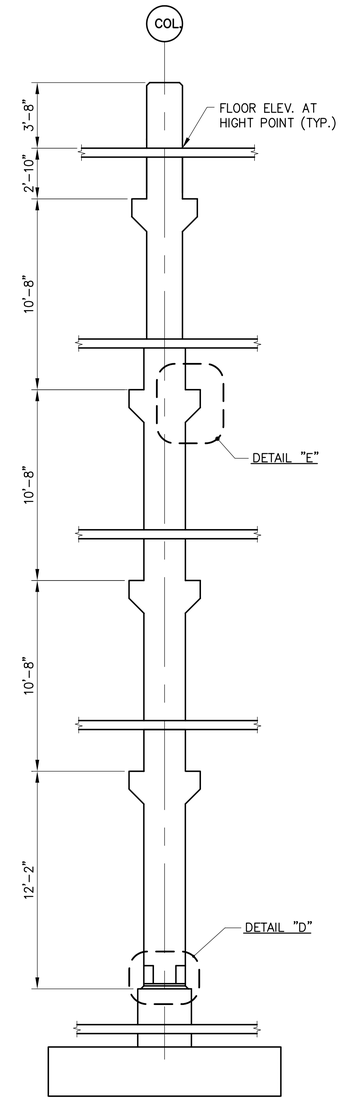

TYP. INTERIOR ELEVATION
SCALE: 1/4"=1'-0"

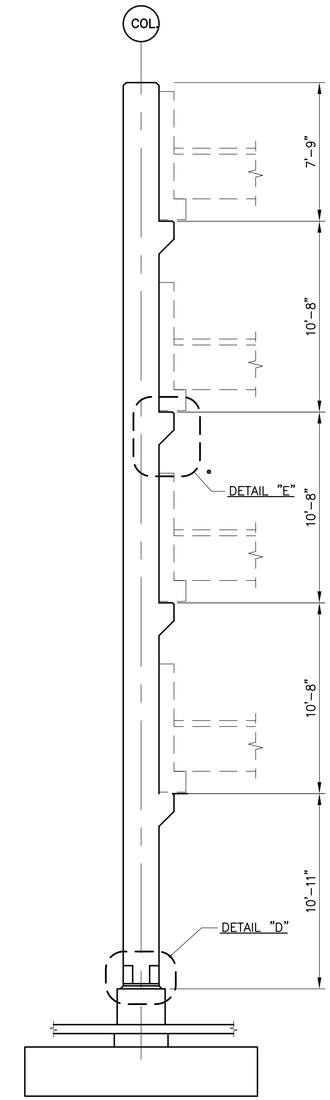

TYPICAL EXTERIOR ELEVATION
SCALE: 1/4"=1'-0"

60% SUBMITTAL
May 2, 2005

JAM Parking Structure
101-115 Middlesex St.
City of Lowell, MA

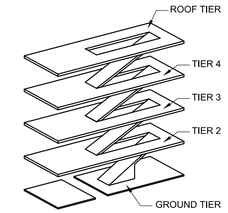

Civil/Structural:
Parsons Brinckerhoff Quade & Douglas, Inc.
75 Arlington Street
Boston, MA 02116
Tel: 617-426-7330
Fax: 617-482-0642

Architecture:
Fennick McCredie Architecture, Ltd.

Survey:
Judith Nitsch Engineering

Cost Estimating:
Hanscomb, Faithful & Gould

Code Compliance:
Robert W. Sullivan, Inc.

Landscape Architecture:
Pressley Associates, Inc.

No.	Date	Revision

Job No.:	18913A
Drawn By:	B.J.D.
Checked By:	CHB
Date:	5/2/05
Scale:	

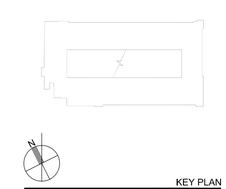

STRUCTURAL
PRECAST DETAILS 1

S-16