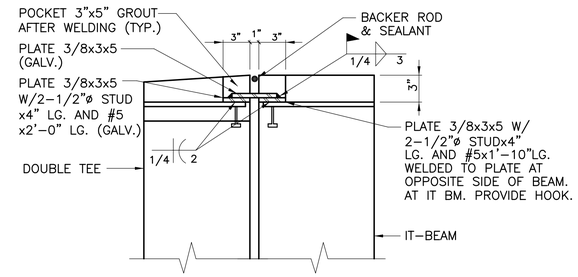

TYP. DOUBLE TEE END CONNECTION AT INVERTED TEE BEAM (EACH STEM)

SCALE: 1 1/2"=1'-0"

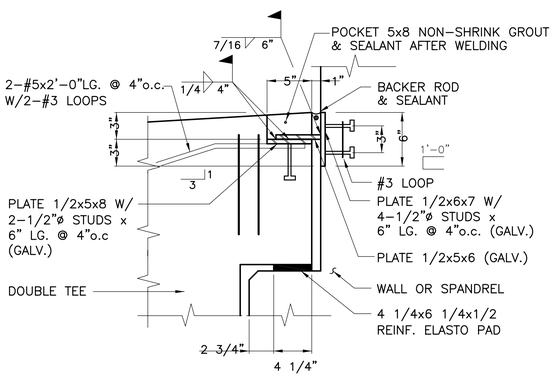

TYP. DOUBLE TEE END CONNECTION TO WALLS & SPANDRELS (EA. STEM)

SCALE: 1 1/2"=1'-0"

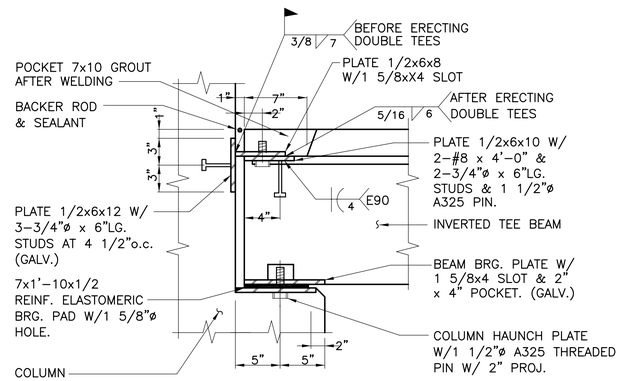

TYP. INVERTED TEE BEAM END CONNECTION TO COLUMN

SCALE: 1 1/2"=1'-0"

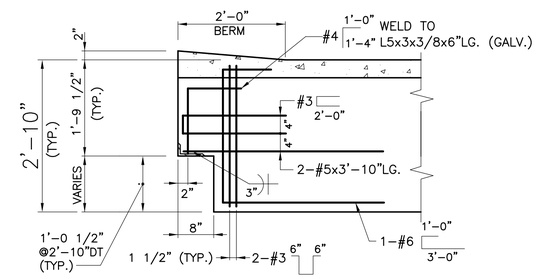

TYP. 2'-10" DOUBLE TEE END BEARING REINF. (SIMILAR FOR OTHER DEPTHS)

SCALE: 3/4"=1'-0"

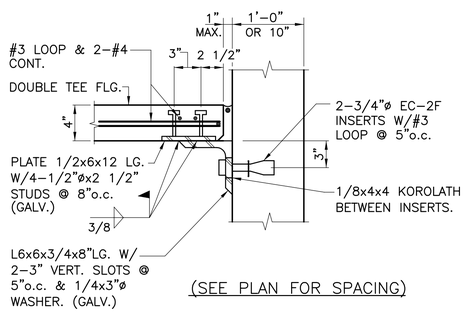

TYP. DOUBLE TEE FLANGE TO WALL & SPANDREL CONNECTION

SCALE: 1 1/2"=1'-0"

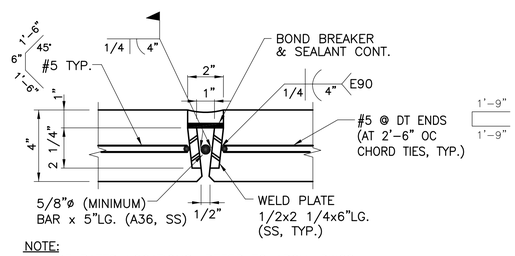

NOTE:
AT FIRE RATED LOCATIONS, REFER TO ARCH. DWGS.
PROVIDE MINIMUM 1/2" DEEP FIRE RATED
CAULK BELOW BOND BREAKER.

TYP. DOUBLE TEE FLANGE CONN.

SCALE: 3"=1'-0"

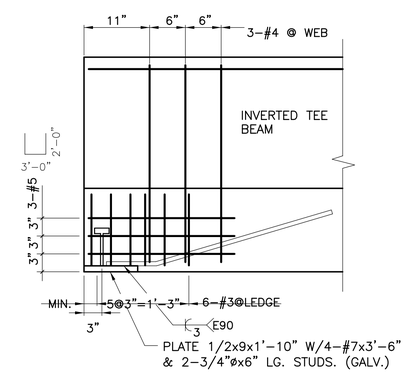

END BEARING REINFORCING

SCALE: 1"=1'-0"

60% SUBMITTAL
May 2, 2005

JAM Parking Structure
101-115 Middlesex St.
City of Lowell, MA

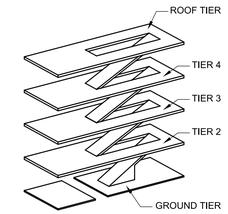

Civil/Structural:
Parsons Brinckerhoff Quade & Douglas, Inc.
75 Arlington Street
Boston, MA 02116
Tel: 617-426-7330
Fax: 617-482-0642

Architecture:
Fennick McCredie Architecture, Ltd.

Survey:
Judith Nitsch Engineering

Cost Estimating:
Hanscomb, Faithful & Gould

Code Compliance:
Robert W. Sullivan, Inc.

Landscape Architecture:
Pressley Associates, Inc.

No.	Date	Revision

Job No.:	18913A
Drawn By:	BJD
Checked By:	CHB
Date:	5/2/05
Scale:	

KEY PLAN

STRUCTURAL
PRECAST DETAILS 3

S-18