CITY OF LOWELL

PETITION

CITY COUNCIL
Gas Mains

Boston Gas dba National Grid

To install approximately 400 ft of a new 2" Plastic gas main from the proposed 2" main in Bassett St to an existing main in Lawrence Street.

In City Council

November 9, 2021

Read and hearing ordered for 7PM on

November 23, 2021

Read, Hearing Held, Referred to Wire Inspector, Development Services

City Clerk

Office of the City Engineer
City Hall • 375 Merrimack Street • Lowell, MA 01852
P: 978.674.4070 • F: 978.970.3332
www.LowellMA.gov

Review of Utility Company Request for New Conduit/Pole Location

Applicant Information

Project Address

Utility (Select one) Gas

32-56 Hudson Street-Bassett to Lawrence

Reason Install approximately 400 feet of a new 2" plastic gas main.

Date Submitted 10/25/2021

Review done by Richard Biagini

Sidewalk Material Asphalt

Note: Sidewalk material to be replaced in kind (Concrete in full panels only)

Are Sidewalk Vaults present?	YES ☐	NO ☑
Is Work on Street under a Paving Moratorium?	YES ☐	NO ☑
Is this location within the Flood Plain?	YES ☐	NO ☑
Are ADA requirements being met?	YES ☑	NO ☐

Comments

Outcome of Review

Approved	Approved With Comments	Denied
X		

Ting Chang, P.E.
City Engineer

The City of LOWELL *Alive. Unique. Inspiring.*

Sent to Eng 10/8/21

PETITION OF NATIONAL GRID FOR GAS MAIN LOCATIONS

OCT 8 '21 AM 9:04
ENGINEERS

City of Lowell/City Council:

Boston Gas dba as Nationalgrid, hereby respectfully requests your consent to the locations of mains as hereinafter described for the transmission and distribution of gas in and under the following public streets, lanes, highways and places of the **City of Lowell** and of the pipes, valves, governors, manholes and other structures, fixtures and appurtenances designed or intended to protect or operate said mains and accomplish the objects of said Company; and the digging up and opening the ground to lay or place same:

To install approximately 400 feet of a new 2" plastic gas main from the from the proposed 2" main in Bassett Street to an existing main in Lawrence Street in accordance with the attached plans.

Date: October 7, 2021

By: Diana Cuddy
Diana Cuddy
Gas Ops-NE

City of Lowell/City Council:

IT IS HEREBY ORDERED that the locations of the mains of the Nationalgrid for the transmission and distribution of gas in and under the public streets, lanes, highways and places of the **City of Lowell** substantially as described in the petition date **October 7, 2021**attached hereto and hereby made a part hereof, and of the pipes, valves, governors, manholes and other structures, fixtures and appurtenances designed or intended to protect or operate said mains and/or accomplish the objects of said Company, and the digging up and opening the ground to lay or place same, are hereby consented to and approved.

The said Boston Gas dba Nationalgrid, shall comply with all applicable provisions of law and ordinances of the **City of Lowell** applicable to the enjoyment of said locations and rights.

Date this _____ day of _____, 20____.

I hereby certify that the foregoing order was duly adopted by the _____ of the **City** of _____, MA on the _____ day of _____, 20____.

By: _____

_____
Title

WO # 1409755

RETURN ORIGINAL TO THE REAL ESTATE SECTION
NATIONAL GRID
40 SYLVAN RD, WALTHAM, MA 02451
RETAIN DUPLICATE FOR YOUR RECORDS

FORM # 1444, Rev. 90

General Comments (Attach Sketch)

As part of the GPLNG program, Strategic Asset and System Planning recommends:--> Install approx. 400 feet of 2 inch, 60 psig plastic main from the proposed 2 inch, 60 psig plastic main in Bassett St under wo#1394951 to the existing 8 inch, 60 psig coated steel (1955) - (ILOW0216) main in Lawrence St.(0 svs, 2 connections).Construction Field Review By:, CFR

GPLNG PROGRAM - STRATEGIC ASSET AND SYSTEM PLANNING
INSTALL 2" PL (60 PSIG)
32-56 HUDSON ST & LAWRENCE ST, LOWELL, MA.
W.O. NO.: 1409755

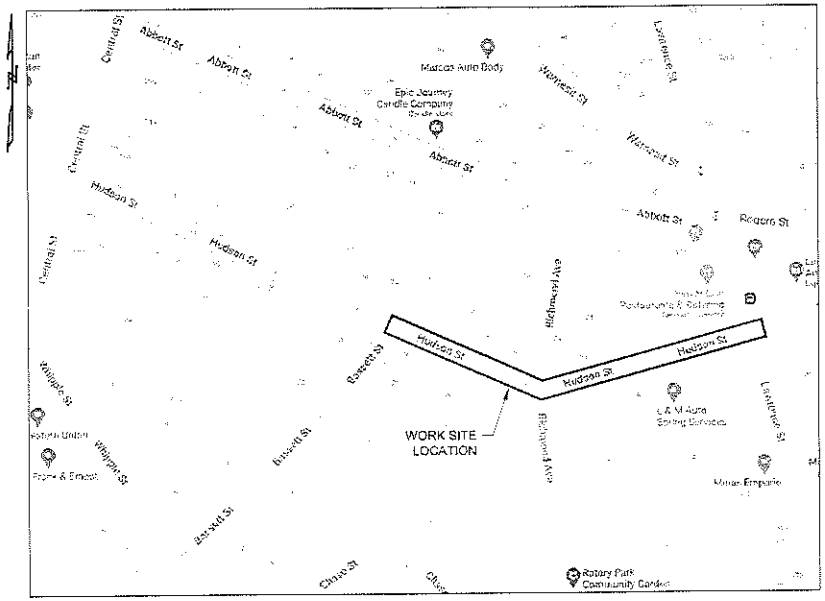

LOCUS
SCALE: NTS

INDEX OF PAGES		
PAGE	DRAWING NO.	TITLE
1	GPL-LOW-1409755 G-001	COVER PAGE
2	GPL-LOW-1409755 G-002	CONSTRUCTION NOTES AND BOM
3	GPL-LOW-1409755 C-001	PROPOSED INSTALLATION PLAN
4	GPL-LOW-1409755 C-101	PROPOSED TIE-IN DETAILS
5	GPL-LOW-1409755 C-102	PROPOSED CROSSING DETAILS
6	GPL-LOW-1409755 C-103	PROPOSED TEMPORARY TRAFFIC CONTROL PLAN
7	GPL-LOW-1409755 C-104	PROPOSED TEMPORARY TRAFFIC CONTROL PLAN
8	GPL-LOW-1409755 C-201	STANDARD DETAILS
9	GPL-LOW-1409755 C-202	STANDARD DETAILS
10	GPL-LOW-1409755 C-203	STANDARD DETAILS

PROJECT SUMMARY TABLE					
PROPOSED INSTALLATION			PROPOSED ABANDONMENT		
LENGTH (FT)	SIZE (IN)	TYPE	LENGTH (FT)	SIZE (IN)	TYPE
400	2	PL-60#	N/A	N/A	N/A
400	TOTAL INSTALLATION (FT)		N/A	TOTAL ABANDONMENT (FT)	

811 DigSafe

NOTE TO CONTRACTOR:
BEFORE PERFORMING ANY WORK, THE CONTRACTOR SHALL CONTACT THE "DIG NUMBER" (PHONE 800-272-1000), FOR A MARK-OUT OF ALL UNDERGROUND UTILITIES. IT IS THE RESPONSIBILITY OF THE CONTRACTOR TO CONTACT THE "DIG NUMBER" AND TO ASCERTAIN THE LOCATION OF ALL UNDERGROUND CONSTRUCTION IN THE AREA OF THE PROJECT.

THE CONTRACTOR SHALL CONDUCT TEST PITS TO VERIFY THE LOCATIONS OF UNDERGROUND UTILITIES WHERE POTENTIAL CONFLICTS MAY OCCUR OR WHERE DISCREPANCIES ARE PRESENT BETWEEN THE PLAN AND UNDERGROUND UTILITY MARK-OUTS.

THESE TEST PITS SHALL BE IN ADDITION TO THE SPECIFIED TEST PIT LOCATIONS AS DENOTED ON THE PLANS AND SHALL NOT BE LIMITED TO EXCAVATION SOLELY BUT INCLUDE ANY ADDITIONAL MEANS TO DETERMINING THE LOCATION OF UTILITIES IN QUESTION.

TRC
215 GREENFIELD PARKWAY
SUITE 102
LIVERPOOL, N.Y. 13066

DANIEL D'ELETTO
CIVIL
No. 55061
REGISTERED PROFESSIONAL ENGINEER
SIGN & DATE

NO.	DESCRIPTION	DATE	DR.BY	CK.BY	APP.BY
2	ADDED 3RD PARTY UTILITIES IN HUDSON ST WORK AREA AND CROSSING DETAILS	8/3/2021	PL	REB	DD
1	REVISED TIE-IN (2) TO PROVIDE STUB AND VALVE, ADDED STANDARD DETAILS	7/21/2021	PL	JHS	DD
0	ISSUED FOR CONSTRUCTION	7/8/2021	PL	JHS	DD

nationalgrid
40 SYLVAN ROAD
WALTHAM, MA 02451

FINAL

GPLNG PROGRAM, STRATEGIC ASSET AND SYSTEM PLANNING
INSTALL 2" PL (60 PSIG)
32-56 HUDSON ST & LAWRENCE ST
LOWELL, MASSACHUSETTS
COVER PAGE

DWG SIZE	DESIGNER	ENGINEER	DATE:	ASSET I.D.	W.O. NO.:
22"X34"	P. LISTER	D. D'ELETTO	7/8/2021	XXXXXXXXXXX	1409755

PAGE 1 OF 10

DRAWING NO.
GPL-LOW-1409755 G-001

NOTES:

SCOPE OF WORK:

All work associated with this project shall be performed under Work Order Number 1409755 in Lowell, MA on the Lowell 60 psig system. This project will require 2 main connections and the installation of approximately 400 feet of 2 inch, 60 psig plastic main from the proposed 2 inch, 60 psig plastic main in Bassett St under wo#1394951 to the existing 8 inch, 60 psig coated steel (1955) - (ILOW0216) main in Lawrence St.

DESIGN PARAMETERS (ENG04001):

1. Pipe Diameter: 2"
2. Pipe SDR: 11
3. Pipe MAOP @73.4°F: 100 psig
4. Material Specification: PE 2406/2708
5. System MAOP: 60 psig
6. Min/Max Pressure: 10/60 psig
7. Min/Max Ambient Temp: -20/73°F
8. Design Factor: 0.40*
9. Product: Natural Gas
10. Pressure Test: 90 psig
11. Test Medium: Air
12. Pipe Burial Depth: Min. 3' cover

***Polyethylene pipe produced after January 22, 2019**

GENERAL:

1. The proposed gas main location is approximate and subject to change based on field conditions.
2. Property lines, building footprints, curb lines, edge of road, existing gas mains, etc. are approximate and were taken from National Grid's ArcGIS mapping system.
3. Existing third-party utility locations, if shown, were taken from existing markouts, manhole/valve box covers, and/or utility maps/drawings and should be test holed to verify exact location prior to construction.
4. **Call 811 prior to excavation for underground utility owners to locate and mark out their facilities. Massachusetts State law requires you give at least 72 hours' notice prior to excavation.**
5. Offsets, constructed from material consistent with the project Bill of Materials, may be installed as necessary to maintain depth and clearance to other underground utilities/obstacles required by ENG04001-Design.
6. Valves shall be installed and located in accordance with ENG04001. Valves shall be placed on each lateral main as close to the feeder main as practical downstream of tees or junctions. In a grid system, 2-inch mains should have valves at each end of a block using three valves as the maximum number at any four-way intersection. However, if the blocks are short and sparsely populated, the lateral may run for two or three blocks without a valve. The location of a valve should be approximately fifteen (15) feet behind the property line of an intersection measured along the main away from the intersection. Where the property line is not readily available, this location is between 23 and 25 feet behind the curb line. This places the valve just beyond the flair of the roadway turn where a valve operator will be afforded some protection from the traffic. Valves should not be installed in the intersection unless the street is exceptionally long and closely built-up.
7. Contact the Environmental Dept. before digging if this project is located: in a Potentially Contaminated Area; within 100 feet of wetlands/ bodies of water; within 200 feet of rivers/streams; and/or a floodplain as noted on National Grid ArcGIS maps.
8. The tie-in and installation of this line has no impact on gas regulation and/or overpressure protection for this portion of the natural gas distribution system.
9. Welding shall be performed in accordance with Welding Policy CNST05002 by qualified welders in accordance with safety standards and protocols using qualified Welding Procedure Specifications. Prior to welding, inspect fitting location for lamination, corrosion, pitting, dents, grooves or other defects and perform UT wall thickness verification of existing steel mains. Document completion and inspection of welds noting welder ID and procedure used.
10. Contact I&R for all excavations within 200' of a regulator station and/or when project is over 2,500' long for supplemental odorization per INR06002 before gassing in.
11. Pressure gauges are required at all mains for all tie-ins. Refer to GCON-02001 Procedure. Check electronic mapping system for most current mapping information.
12. Pressure Testing shall be performed to a minimum of 90 psig or 1.5 times the MAOP, whichever is greater, with air in accordance with test durations specified in CNST04003. Tests shall also be performed in accordance with CS-MAIN004.
13. Paving, curbs, sidewalks, landscaping and signs shall be replaced in kind, unless otherwise specified.
14. Preparation of Gas Facility Historical Records shall be performed in accordance with CNST01005.
15. Cut out and remove the section of pipe between the source gas pipe and the main to be abandoned in accordance with CNST04011. All open ends shall be capped, plugged or otherwise effectively sealed. Except for live insertions, polystyrene or spray foam shall not be used for stop-off when purging a pipeline out of service. The retired lines shall be purged according to Company procedures. If air is used for purging, ensure that a combustible mixture is not present after purging. Use a combustible gas indicator to check the atmosphere in the retired pipe to obtain a zero-gas reading.
16. Effective January 22, 2020, Federal Code 192.281(e)(4) requires that mechanical couplings meet more stringent restraining requirements. All 4" through 12" Polyethylene (PE) to Cast Iron (CI) or Steel (ST) tie-ins shall be completed with Dresser couplings that have a new, yellow instruction tag. If the yellow tagged couplings are not available, the PE must be transitioned to ST using a transition fitting prior to completing the tie-in. Couplings with orange tags will no longer be approved for use on PE pipe.
17. Effective April 22, 2019, Federal Code 192.455 requires that electrically isolated metal alloy fittings must have cathodic protection applied and the level of protection must be checked every ten years. This requirement may be met by installing an anode and a test station for each isolated fitting.

CODES:

This project will adhere to all applicable Federal, State or Local permitting requirements for installation and abandonment of natural gas pipelines. All Federal, State and Local codes and standards will be adhered including, but not limited to, the following:

Code of Federal Regulations (CFR)
49 CFR 192 Pipeline Safety Regulations
29 CFR 1910 Occupational Safety and Health Administration (OSHA)

220 CMR 101 Massachusetts Natural Gas Pipeline Safety Code

American Society of Mechanical Engineers (ASME)
ASME B31.8 Gas Transmission and Distribution Piping Systems

POLICIES & STANDARDS:

National Grid policies and standards will be adhered to including, but not limited to, the following as applicable:

Applicable Gas Policies for Construction of Steel or Plastic Mains	
030018-CS - Specifications and Handling of Traffic Plates	CS-SERV003 - Typical 1-1/4" Service Outside Sets
030024-CS - Install of Magnesium Anodes	CS-SERV004 - 2" Plastic Service
030026-CS - Install of Test Stations for Cathodic Protection	CS-SERV005 - Excess Flow Valve Requirements on HP Services
030028-CS - Install of Insulating Joints for Cathodic Protection	CS-SERV009 - TYPICAL 1/2" Service Inside Sets
030031-CS - Facility Coating Guide	CS-SERV019 - TYPICAL 1" Service Inside Sets
030038-CS - Install of Wiring Connections	CS-SERV075 - Relocation of Meter Set Assemblies Inside to Outside
CMS03002 - Customer Meter and Service Regulator Design and Installation Policy	DAM01011 - Excavation and Excavation Notification Requirements for Underground Facilities for Massachusetts and Rhode Island
CMS04002 - Purging Procedures for Customer Meter Service	DAM01015 - Locate and Markout Requirements for Underground Gas Facilities
CNST-6030 - Protective Steel Plating for Gas Mains & Services	DAM01016 - Locate and Mark-Out of Underground Facilities
CNST01003 - Backfill & Restoration	ENG04001 - Design of Distribution Mains
CNST01005 - Preparation of Gas Facility Historical Records	EQ140 - Regulatory Requirements for Used Gas Pipe
CNST01006 - Commercially Available Shoring Systems	EC303-NE - ROW Access, Maintenance and Construction Best Management Practices for New England
CNST02014 - Encapsulating Cast Iron Joints	GCON02001 - System Operating Procedure (SOP)
CNST03001 - Squeeze-Off Operations	GEN01100 - Operator Qualification Plan
CNST03002 - Stop-off Operations on Low Pressure Mains	GEN03002 - Processing Gas Main and New Services Work Packages
CNST03003 - Make-Safe Actions for Gas Releases (Migrating & Blowing gas)	GEN03004 - Change Control Procedure for Standard Construction Projects
CNST03005 - Purging Gas Pipelines	HTAP5010 - Non-Interrupt 1 Inch CTS and 1-1/4 Inch CTS Service Transfer (NIST) LP to 60 PSIG Mains
CNST03006 - Purging Operations - Direct Displacement	INR06002 - Supplemental Odorization for New Piping
CNST03007 - Purging Operations - Complete Inert Gas Fill	MAIN5030 - Installation of Polyethylene Pipe
CNST03008 - Purging Operations - Slug Method	MAIN5010 - Std Flow Test Procedure for Main Bag-Off Low-Pressure Mains
CNST03011 - No-Interrupt Service Transfer (NIST)	MAIN6000 - Casing Installations
CNST04003 - Pressure Testing Mains Operating Below 125 psig	MAIN6190 - Anchorage for CI to Steel Non-Restraining Insulating Coupling, LP and HP
CNST04005 - Install of Steel Distribution Mains	MAIN6220 - Steel Rods & Lugs for Restraining of Non-Restraining Mech Comp Couplings & Caps for Pressurized Inline Steel Pipe & Drop In Pieces
CNST04011 - Abandonment of Mains	MAIN6230 - Anchorage Lugs for Comp Coup on Steel Mains
CNST04012 - Grouting Abandoned Pipelines	MECH5010 - Joints Other Than Welded
CNST05001 - Joining of Plastic Pipe	MECH6010 - Connection of Dissimilar Polyethylene Plastic Pipe with Electrofusion or Mechanical Coupling
CNST05002 - Welding Policy	MECH6020 - Connection of Dissimilar Polyethylene Plastic Pipe with Electrofusion or Mechanical Saddle Tee
CNST05003 - Pipe Welding Safety	MECH6030 - Connection of Dissimilar Polyethylene Plastic Pipe with Mechanical Coupling - Alternate
CNST05005 - Welding Procedure Specification	MS-030 - Welding Filler Materials
CNST5010 - General Construction Requirements and Pipe Handling	PURG6040 - Typical Nitrogen Purge Arrangement
CNST09002 - Installing Distribution Services	SHE01001 - General Safety Requirements
CNST06003 - Installation & Maintenance Policy for Curb Valves on Service Lines with Installed Meter Capacities over 1,000 SCFH that don't have Excess Flow Valves.	SHE01002 - Supplied-Air Respirators
CNST06005 - Pressure Testing Service Lines	SHE01003 - Using and Maintaining Portable Gas Monitors
CNST06009 - Meter/Service Relocation Guideline	SHE01005 - Dissipating Static Electrical Charges on Plastic Pipe
CNST06020 - Completion and Processing of Gas Service Record Cards	SHE01010 - The Application of Formal Process Safety Assessments to Higher-Risk Gas Activities Performed in the Field
CNST06030 - Notification of Customers Involved in the Interruption of Gas Services	SHE02001 - Handling Contaminated Materials and Piping

BILL OF MATERIALS

Item	SIZE (IN.)	QTY	UOM	DESCRIPTION	SPECIFICATION	SAP ID NUMBER
				GAS MAIN		
1	2	400	FT	PIPE, PLASTIC, MDPE, PE 2406/2708, SDR 11, 250' COIL	CS-PIT001	9340676
2	2	A/R	FT	PIPE, PLASTIC, MDPE, PE 2406/2708, SDR 11, 10' STICK	CS-PIT001	9322709
3	2	1	EA	TEE, PLASTIC, BUTT FUSE, MDPE, SDR 11	CS-FIT012	9342031
4	2	1	EA	TEE, MUELLER, NO-BLO, THREADED CAP, FLAT BOTTOM	HTAP-6025-AKA	9324487
5	2	3	EA	VALVE, PLASTIC, FULL PORT BALL, MDPE, SDR 11	VALV-6020	9341784
6	2	3	EA	ROADWAY VALVE BOX WITH COVER	VALV-6020	9339890
7	2	2	EA	COUPLING, PLASTIC, ELECTROFUSION, HDPE	CS-FIT015	9314594
8	2	2	EA	CAP, PLASTIC, BUTT FUSE, MDPE, SDR 11	CS-FIT010	9339540
9	2	1	EA	TRANSITION FITTING, PLASTIC TO STEEL, MDPE SDR 11.0 X SCH. 40 WELD END	FITS-6022	9339392
				GENERAL		
G1	12 AWG	400	FT	TRACER WIRE, DIRECT BURY, COPPER, STRANDED	CNST-6081	9314187
G2	6	400	FT	YELLOW CAUTION TAPE - GAS MAIN - 6" WIDE	CNST-6060	9341904
				PRESSURE TEST/PURGE (TEMPORARY)		
P1	2	2	EA	TEE, SERVICE, PLASTIC, HDPE, EF,1" IPS OUTLET	CS-MAIN004	9322853
P2	2	2	EA	CAP, PLASTIC, BUTT FUSE, MDPE, SDR 11	CS-FIT010	9339540
P3	1	2	EA	COUPLING, PLASTIC, ELECTROFUSION, HDPE, IPS X CTS	FITS-6022	9341458
P4	1	2	EA	RISER, ANODELESS, 1" CTS MDPE X 3/4" IPS STEEL OUTLET	CS-MAIN004	9344306
P5	1	2	EA	END CAP, PERMASERT, CTS	FITS-6022	9312358
				CATHODIC PROTECTION		
C1	N/A	1	EA	CP TEST BOX W/O COVER, ROADWAY AREAS	030026-CS	9339391
C2	N/A	1	EA	CP TEST BOX COVER, ROADWAY AREAS	030026-CS	9339797
C3	N/A	A/R	EA	WIRE, NO. 8, 7 STRAND	030026-CS	9307939
C4	N/A	4	EA	ANODE, MAGNESIUM 17LBS	030026-CS	9311163

*MATERIAL QUANTITIES SPECIFIED REPRESENT MINIMUM QUANTITIES ONLY. FINAL QUANTITIES MAY CHANGE SUBJECT TO MEETING NATIONAL GRID STANDARDS AND DESIGN/SPEC REQUIREMENTS

CNST5043 - Support Requirements for Exposed And Undermined Steel or Plastic Gas Facilities	SHE02003 - Encountering Contamination While Excavating
CNST5046 - Temporary supports spacing guidelines for cast iron mains	SERV6165 - Hot Tapping MD Branch Saddles Offset - 12in 60 psig MAOP Live Plastic Gas Main Using McElroy Hot Tapping Tool
CNST5061 - Tracer Wire Installations for Plastic Mains and Services	VALV6020 - 2in -12in PE Valve Typical-Install
COR02001 - Application of Coating Systems	VALV6070 - Valve Maintenance Standard
COR02020 - Inspecting Exposed Steel Pipe for Corrosion	VALV6110 - 1/2 Inch - 3 Inch Polyethylene Gas Service Valve Installation
COR03001 - Testing of Pipe Coating (Jeep Testing)	VALV6120 - Valves
COR04001 - Installation of Magnesium Anodes	A-105 - Job Briefing
COR04003 - Installation of Test Stations for Cathodic Protection	E-504 - Material Handling and Rigging Equipment
COR04004 - Installation of Wire Connections	F-617 - Handling Coal Tar Wrap
COR04005 - Installation of Insulating Joints for Cathodic Protection	I-903 - Lockout - Tagout Control of Hazardous Energy Sources
CS-LIVE001 - Acceptable Methods of Isolation for Performing Hot Work	J-1002 - Incident Reporting Guidelines
CS-LIVE002 - Temporary Bypasses on Plastic, Cast Iron or Steel Mains	L-1201 - Hot Work Procedure
CS-MAIN004 - Pressure Testing of New Mains MAOP of 124 psig or Less	M-1301 - Standards for Working in Excavations
CS-SERV001 - Typical 1/2" Service Outside Sets	N-1402 - Contractor Safety Requirements
CS-SERV002 - Typical 1" Service Outside Sets	O-1702 - Work Zone Traffic Control

TRC
215 GREENFIELD PARKWAY
SUITE 102
LIVERPOOL, N.Y. 13088

NO.	DESCRIPTION	DATE	DRAWN	CHKD	APP. BY
2	ADDED 3RD PARTY UTILITIES IN HUDSON ST WORK AND AND CROSSING DETAILS	8/3/2021	PL	RER	DD
1	REVISED TIE-IN #2 TO PROVIDE STUB AND VALVE, ADDED STANDARD DETAILS	7/21/2021	PL	JKS	DD
0	ISSUED FOR CONSTRUCTION	7/9/2021	PL	JKS	DD

SIGN & DATE

nationalgrid
40 SYLVAN ROAD
WALTHAM, MA 02451

FINAL

GPLNG PROGRAM, STRATEGIC ASSET AND SYSTEM PLANNING
INSTALL 2" PL (60 PSIG)
32-56 HUDSON ST & LAWRENCE ST
LOWELL, MASSACHUSETTS

CONSTRUCTION NOTES AND BILL OF MATERIALS

DWG SIZE	DESIGNER	ENGINEER	DATE:	ASSET I.D.	W.O. NO.:
22"X34"	P. LISTER	D. D'ELETTO	7/9/2021	10000000000	1409755

DRAWING NO.
GPL-LOW-1409755 G-002

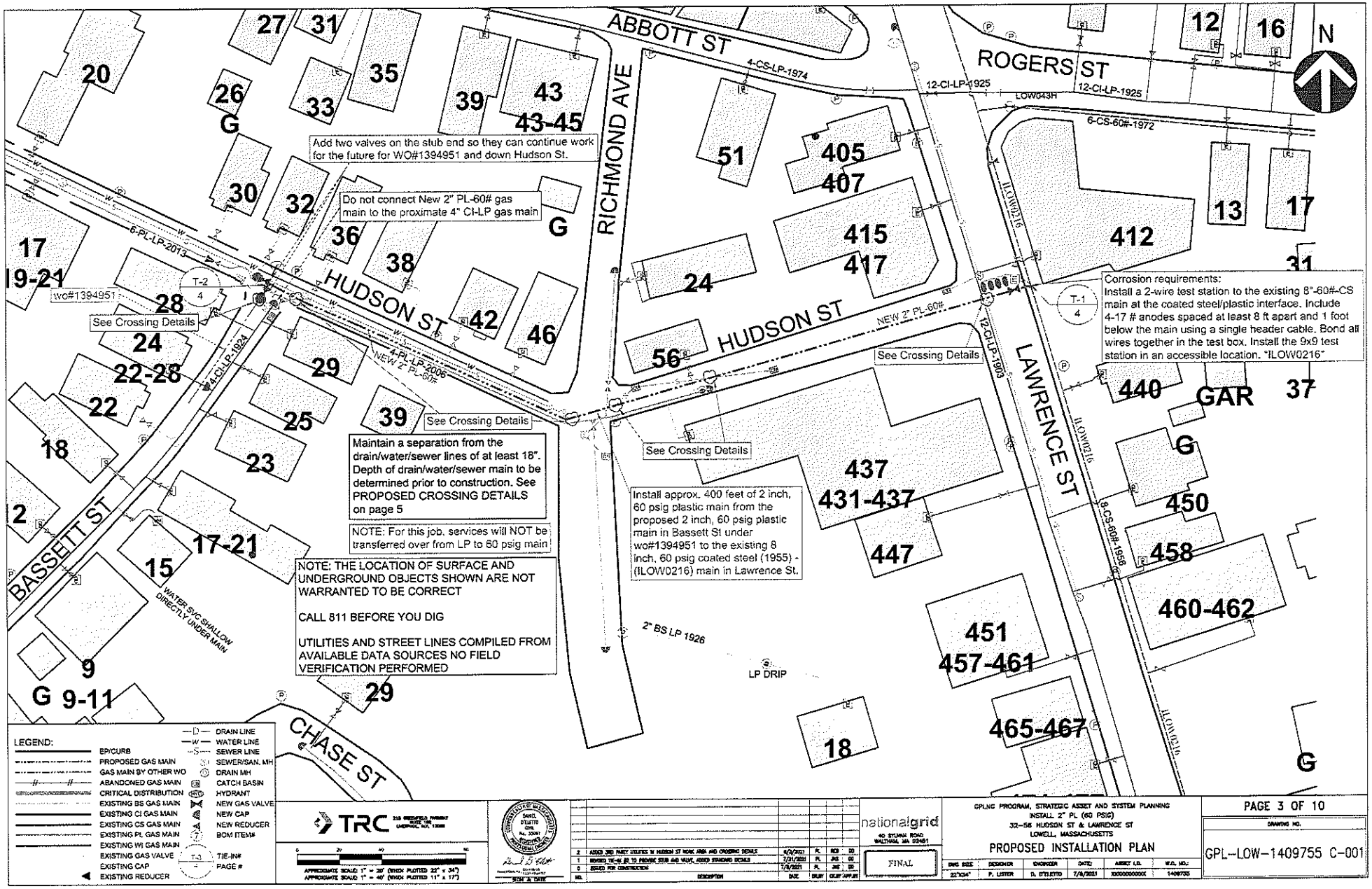

ABBOTT ST
ROGERS ST
RICHMOND AVE
HUDSON ST
LAWRENCE ST
BASSETT ST
CHASE ST
N
4-CS-LP-1974
12-CI-LP-1925
LOW043H
6-CS-60#-1972
6-PL-LP-2013
4-CI-LP-1924
4-PL-LP-2006
NEW 2" PL-60#
12-CI-LP-1903
8-CS-60#-1958
ILOW0216
2" BS LP 1926
LP DRIP
WATER SVC SHALLOW DIRECTLY UNDER MAIN
T-2
4
T-1
4
wo#1394951
See Crossing Details
Add two valves on the stub end so they can continue work for the future for WO#1394951 and down Hudson St.
Do not connect New 2" PL-60# gas main to the proximate 4" CI-LP gas main
Maintain a separation from the drain/water/sewer lines of at least 18". Depth of drain/water/sewer main to be determined prior to construction. See PROPOSED CROSSING DETAILS on page 5
NOTE: For this job, services will NOT be transferred over from LP to 60 psig main
NOTE: THE LOCATION OF SURFACE AND UNDERGROUND OBJECTS SHOWN ARE NOT WARRANTED TO BE CORRECT
CALL 811 BEFORE YOU DIG
UTILITIES AND STREET LINES COMPILED FROM AVAILABLE DATA SOURCES NO FIELD VERIFICATION PERFORMED
Install approx. 400 feet of 2 inch, 60 psig plastic main from the proposed 2 inch, 60 psig plastic main in Bassett St under wo#1394951 to the existing 8 inch, 60 psig coated steel (1955) - (ILOW0216) main in Lawrence St.
Corrosion requirements:
Install a 2-wire test station to the existing 8"-60#-CS main at the coated steel/plastic interface. Include 4-17 # anodes spaced at least 8 ft apart and 1 foot below the main using a single header cable. Bond all wires together in the test box. Install the 9x9 test station in an accessible location. "ILOW0216"
20
27
31
35
26
G
33
39
43
43-45
30
32
36
38
G
51
405
407
415
417
24
56
412
12
16
13
17
31
17
19-21
28
24
22-28
22
29
25
39
18
23
12
17-21
15
9
G 9-11
29
437
431-437
447
451
457-461
465-467
18
440
GAR
37
G
450
458
460-462
G
LEGEND:
EP/CURB
PROPOSED GAS MAIN
GAS MAIN BY OTHER WO
ABANDONED GAS MAIN
CRITICAL DISTRIBUTION
EXISTING BS GAS MAIN
EXISTING CI GAS MAIN
EXISTING CS GAS MAIN
EXISTING PL GAS MAIN
EXISTING WI GAS MAIN
EXISTING GAS VALVE
EXISTING CAP
EXISTING REDUCER
DRAIN LINE
WATER LINE
SEWER LINE
SEWER/SAN. MH
DRAIN MH
CATCH BASIN
HYDRANT
NEW GAS VALVE
NEW CAP
NEW REDUCER
BOM ITEM#
TIE-IN#
PAGE #
TRC
APPROXIMATE SCALE: 1" = 20' (WHEN PLOTTED 22" x 34")
APPROXIMATE SCALE: 1" = 40' (WHEN PLOTTED 11" x 17")
SIGN & DATE
nationalgrid
40 SYLVAN ROAD
WALTHAM, MA 02451
FINAL
GPLNG PROGRAM, STRATEGIC ASSET AND SYSTEM PLANNING
INSTALL 2" PL (60 PSIG)
32-56 HUDSON ST & LAWRENCE ST
LOWELL, MASSACHUSETTS
PROPOSED INSTALLATION PLAN
PAGE 3 OF 10
DRAWING NO.
GPL-LOW-1409755 C-001

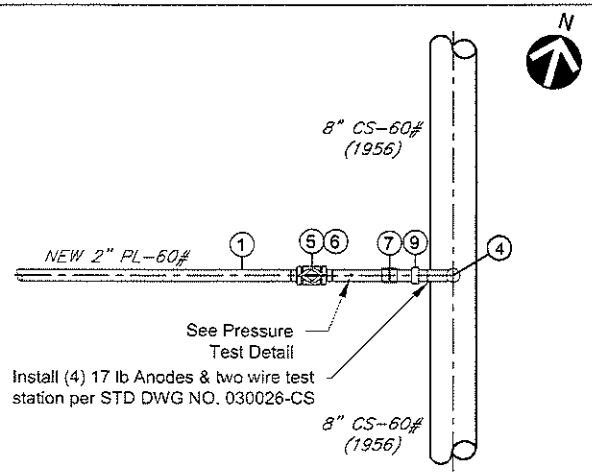

Tie-In Detail T-1
Refer to STD. DWG. NO.
HTAP-6025-MA-RI
Scale: 1" = 10"

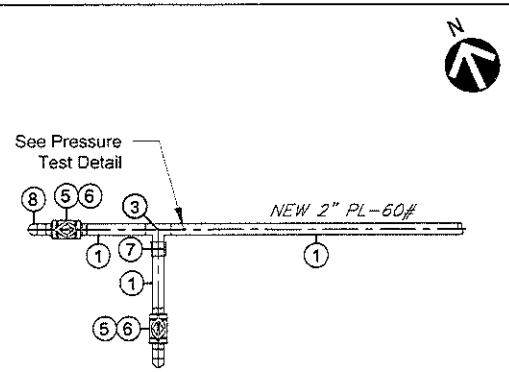

Tie-In Detail T-2
Refer to STD. DWG. NO.
MAIN-6095-MA-RI
Scale: 1" = 10"

LEGEND:

- PROPOSED GAS MAIN
- ABANDONED GAS MAIN
- EXISTING BS GAS MAIN
- EXISTING CI GAS MAIN
- EXISTING CS GAS MAIN
- EXISTING PL GAS MAIN
- CENTERLINE
- (7) BILL OF MATERIALS ITEM NUMBER

TRC

SCALE: 1" = 10" (WHEN PLOTTED TO 22"x 34")
SCALE: 1" = 20" (WHEN PLOTTED TO 11"x 17")

NO.	DESCRIPTION	DATE	DRAWN	CHKD	APPR
2	ADDED 3RD PARTY UTILITIES IN HUDSON ST WORK AREA AND CROSSING DETAILS	8/3/2021	PL	RCB	DD
1	REVISED TIE-IN (R) TO PROVIDE STUB AND VALVE, ADDED STANDARD DETAILS	7/21/2021	PL	JMS	DD
0	ISSUED FOR CONSTRUCTION	7/8/2021	PL	JMS	DD

nationalgrid
40 SYLVAN ROAD
WALTHAM, MA 02451

FINAL

GPLNG PROGRAM, STRATEGIC ASSET AND SYSTEM PLANNING
INSTALL 2" PL (60 PSIG)
32-56 HUDSON ST & LAWRENCE ST
LOWELL, MASSACHUSETTS

PROPOSED TIE-IN DETAILS

DWG SIZE	DESIGNER	ENGINEER	DATE	ASSET I.D.	W.O. NO.:
22"X34"	P. LISTER	D. D'ELETTO	7/8/2021	XXXXXXXXXXX	1409755

DRAWING NO.
GPL-LOW-1409755 C-101

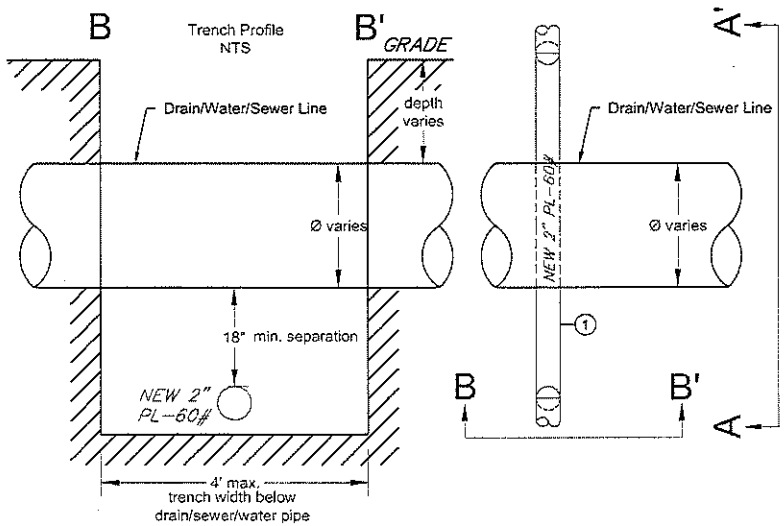

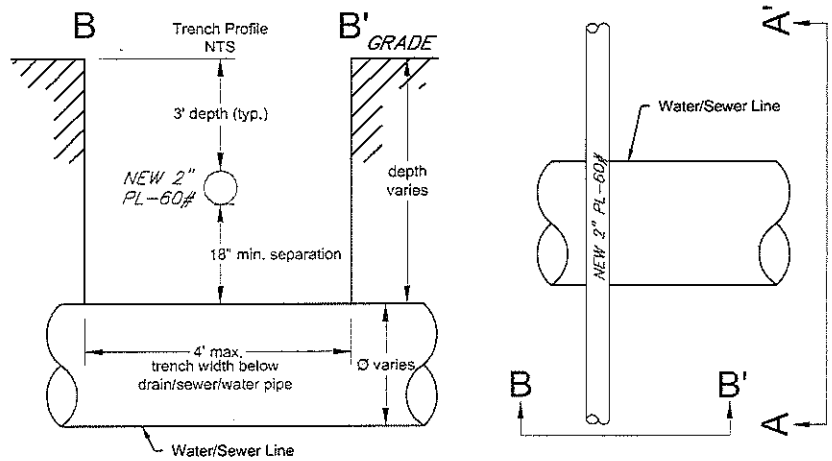

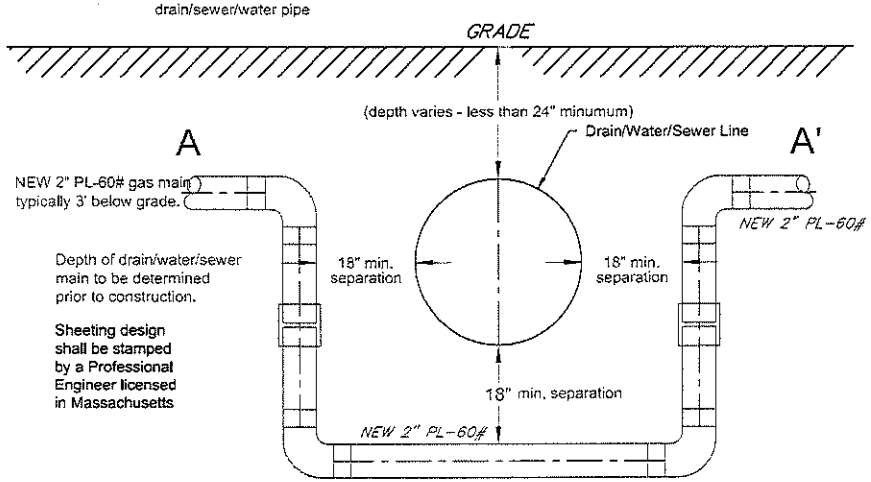

CROSSING UNDER DETAIL
OPTION B FOR
DRAIN/WATER/SEWER LINES

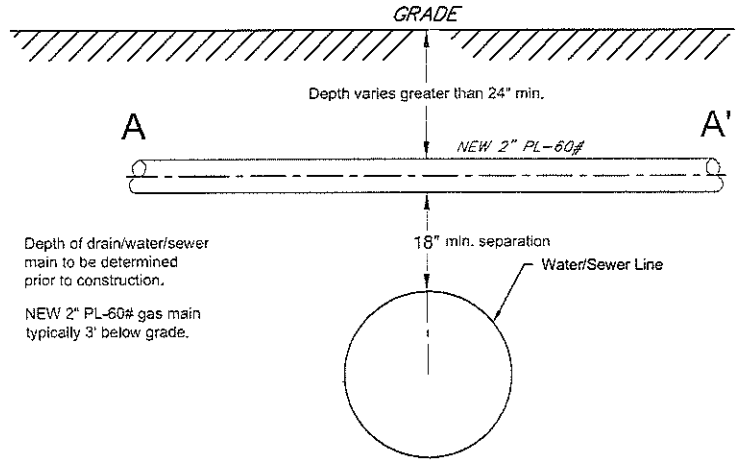

CROSSING OVER DETAIL
OPTION A FOR
WATER/SEWER LINES ONLY

LEGEND:

- PROPOSED GAS MAIN — CENTERLINE
- ABANDONED GAS MAIN
- EXISTING BS GAS MAIN
- EXISTING CI GAS MAIN
- EXISTING CS GAS MAIN
- EXISTING PL GAS MAIN

TRC

NOT TO SCALE

NO.	DESCRIPTION	DATE	DRAWN	CHKD	APPD
2	ADDED 3RD PARTY UTILITIES IN HUDSON ST WORK AREA AND CROSSING DETAILS	8/3/2021	PL	RCB	DD
1	REVISED TIE-IN JR TO PROVIDE STUB AND VALVE, ADDED STANDARD DETAILS	7/21/2021	PL	JRS	DD
0	ISSUED FOR CONSTRUCTION	7/8/2021	PL	JRS	DD

SIGN & DATE

nationalgrid
40 SYLVAN ROAD
WALTHAM, MA 02451

FINAL

GPLNG PROGRAM, STRATEGIC ASSET AND SYSTEM PLANNING
INSTALL 2" PL (60 PSIG)
32-56 HUDSON ST & LAWRENCE ST
LOWELL, MASSACHUSETTS

PROPOSED CROSSING DETAILS

DWG SIZE	DESIGNER	ENGINEER	DATE	ASSET I.D.	W.O. NO.:
22"X34"	P. LISTER	D. D'ELETTO	7/8/2021	XXXXXXXXXXX	1409755

DRAWING NO.
GPL-LOW-1409755 C-102

Table 6H-1. Index to Typical Applications

Typical Application Description	Typical Application Number
Work Outside of the Shoulder (see Section 6G.05)	
Work Beyond the Shoulder	TA-1
Staging Zone	TA-2
Work on the Shoulder (see Sections 6G.07 and 6G.09)	
Work on the Shoulder	TA-3
Short Duration or Mobile Operation on a Shoulder	TA-4
Shoulder Closure on a Freeway	TA-5
Shoulder Work with Minor Encroachment	TA-6
Work Within the Traveled Way of a Two-Lane Highway (see Section 6G.10)	
Road Closed with a Detour	TA-7
Route Closed with an Off-Site Detour	TA-8
Overlapping Routes with a Detour	TA-9
Lane Closure on a Two-Lane Road Using Flaggers	TA-10
Lane Closure on a Two-Lane Road with Low Traffic Volumes	TA-11
Lane Closure on a Two-Lane Road Using Traffic Control Signals	TA-12
Temporary Road Closure	TA-13
Half Road Closure	TA-14
Work in the Center of a Road with Low Traffic Volumes	TA-15
Striping Along the Center Line on a Road with Low Traffic Volumes	TA-16
Mobile Operations on a Two-Lane Road	TA-17
Work Within the Traveled Way of an Urban Street (see Section 6G.11)	
Lane Closure on a Minor Street	TA-18
Detour for One Street Direction	TA-19
Detour for a Closed Street	TA-20
Work Within the Traveled Way of an Intersection and on Sidewalks (see Section 6G.12)	
Lane Closure on the Near Side of an Intersection	TA-21
Right-Hand Lane Closure on the Far Side of an Intersection	TA-22
Left-Hand Lane Closure on the Far Side of an Intersection	TA-23
Half Road Closure on the Far Side of an Intersection	TA-24
Multiple Lane Closures at an Intersection	TA-25
Detour in the Center of an Intersection	TA-26
Closure at the Side of an Intersection	TA-27
Sidewalk Detour or Diversion	TA-28
Crosswalk Closures and Pedestrian Detours	TA-29
Work Within the Traveled Way of a Multi-Lane, Non-Access Controlled Highway (see Section 6G.13)	
Interior Lane Closure on a Multi-Lane Street	TA-30
Lane Closure on a Street with Uneven Directional Volumes	TA-31
Half Road Closure on a Multi-Lane, High-Speed Highway	TA-32
Roadway Lane Closure on a Divided Highway	TA-33
Lane Closure with a Temporary Traffic Barrier	TA-34
Mobile Operation on a Multi-Lane Road	TA-35
Work Within the Traveled Way of a Freeway or Expressway (see Section 6G.14)	
Lane Shift on a Freeway	TA-36
Shoulder Lane Closure on a Freeway	TA-37
Interior Lane Closure on a Freeway	TA-38
Median Crossover on a Freeway	TA-39
Median Crossover for an Entrance Ramp	TA-40
Median Crossover for an Exit Ramp	TA-41
Work in the Vicinity of an Exit Ramp	TA-42
Partial Exit Ramp Closure	TA-43
Work in the Vicinity of an Entrance Ramp	TA-44
Temporary Reversing Lane Using Movable Barriers	TA-45
Work in the Vicinity of a Grade Crossing (see Section 6G.15)	
Work in the Vicinity of a Grade Crossing	TA-46

Table 6H-2. Meaning of Symbols on Typical Application Diagrams

- Arrow board
- Arrow board support or trailer (shown taping down)
- Changeable message sign or sequential trailer
- Channelizing device
- Crash cushion
- Direction of temporary traffic detour
- Direction of traffic
- Flagger
- High-level warning device (Flag tree)
- Longitudinal channelizing device
- Lane name
- Pavement markings that should be removed for a long-term project
- Shadow vehicle
- Sign sidewalk closing with
- Surveyor
- Temporary barrier
- Temporary barrier with warning light
- Traffic or pedestrian cones
- Truck-mounted attenuator
- Type 3 barricade
- Warning light
- Work space
- Work vehicle

Table 6H-3. Meaning of Letter Codes on Typical Application Diagrams

Road Type	Distance Between Signs**		
	A	B	C
Urban low speed*	100 feet	100 feet	100 feet
Urban high speed*	350 feet	350 feet	350 feet
Rural	500 feet	500 feet	500 feet
Expressway / Freeway	1,000 feet	1,000 feet	2,640 feet

* Speed category to be determined by highway agency.

** The column headings A, B, and C are the distances shown in Figures 6H-1 through 6H-46. The A distance is the distance from the transition or point of merchandise to the first sign. The B distance is the distance between the first and second signs. The C distance is the distance between the second and third signs. [illegible] These distances may be adjusted by a TTC zone. The flagger is the sign the flagger uses from the TTC zone.

Table 6H-4. Formulas for Determining Taper Length

Speed (S)	Taper Length (L) in feet
40 mph or less	$L = \frac{WS^2}{60} = \frac{12(30^2)}{60}$
45 mph or more	$L = WS$

Where: L = taper length (feet)
W = width of offset (feet)
S = posted speed, mph or off-peak 85th percentile speed prior to work starting on the anticipated traveled way (mph)

Figure 6H-18. Lane Closure on a Minor Street (TA-18)

Applies to Hudson St
(intersections are shown separately)

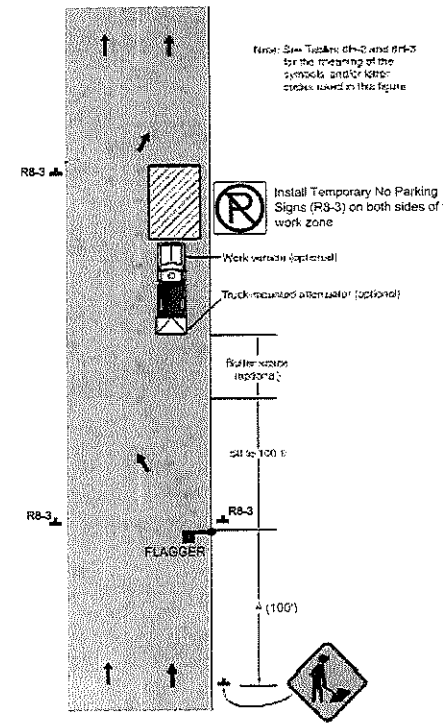

Typical Application 18

TEMPORARY TRAFFIC CONTROL (TTC) PLANS WILL COMPLY WITH THE FUNDAMENTAL PRINCIPLES OF TTC AS PER MUTCD PART 6. COMPONENTS OF THE TTC SHOWN ABOVE FOR THE INITIAL WORK AREA WILL BE SHIFTED AS WORK PROGRESSES AT ENGINEER'S DIRECTION.

TRC 318 INDUSTRIAL PARKWAY SUITE 100 UNIONDALE, NJ 11553

NOT TO SCALE

NO.	DESCRIPTION	DATE	DRAWN	CHKD	APPRV
2	ADDED 360 PARTY UTILITIES IN HUDSON ST WORK AREA AND CROSSING DETAILS	8/2/2021	FL	RGB	DD
1	REVISED TA-18 (2) TO PROVIDE STAR AND WAVE, ADDED STANDARD DETAILS	7/27/2021	FL	JAS	DD
0	ISSUED FOR CONSTRUCTION	7/8/2021	FL	JAS	DD

SIGN & DATE

nationalgrid
40 SYLVAN ROAD
WALTHAM, MA 02451

FINAL

GPLNC PROGRAM, STRATEGIC ASSET AND SYSTEM PLANNING
INSTALL 2" PL (60 PSIG)
32-56 HUDSON ST & LAWRENCE ST
LOWELL, MASSACHUSETTS

PROPOSED TEMPORARY TRAFFIC CONTROL PLAN

DWG SIZE	DESIGNER	ENGINEER	DATE	ASSET I.D.	W.O. NO.:
22"X34"	F. LISTER	D. STELLETTO	7/8/2021	XXXXXXXXXXX	1409755

PAGE 6 OF 10

DRAWING NO.
GPL-LOW-1409755 C-103

Figure 6H-27. Closure at the Side of an Intersection (TA-27)

Applies to the intersection of Lawrence St and Hudson St

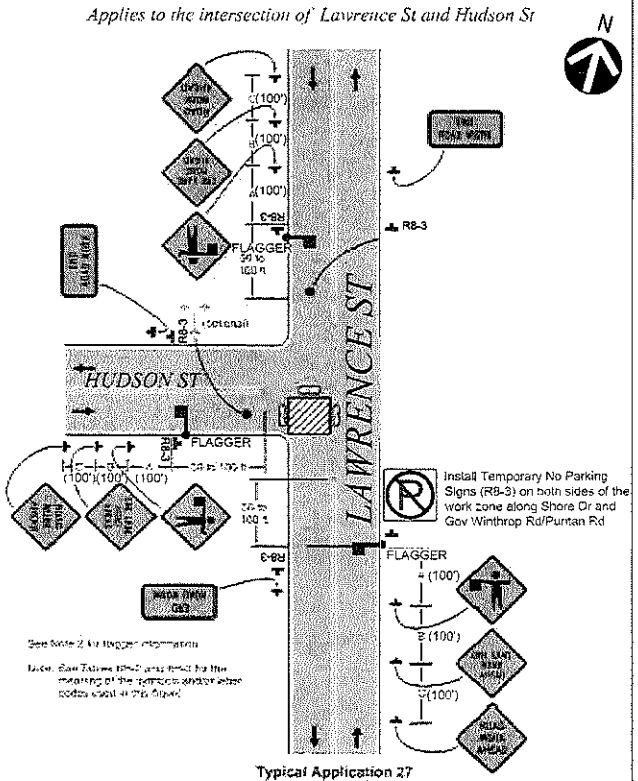

Typical Application 27

2009 Edition Page 687

Figure 6H-27. Closure at the Side of an Intersection (TA-27)

Applies to the intersection of Richmond Ave and Hudson St

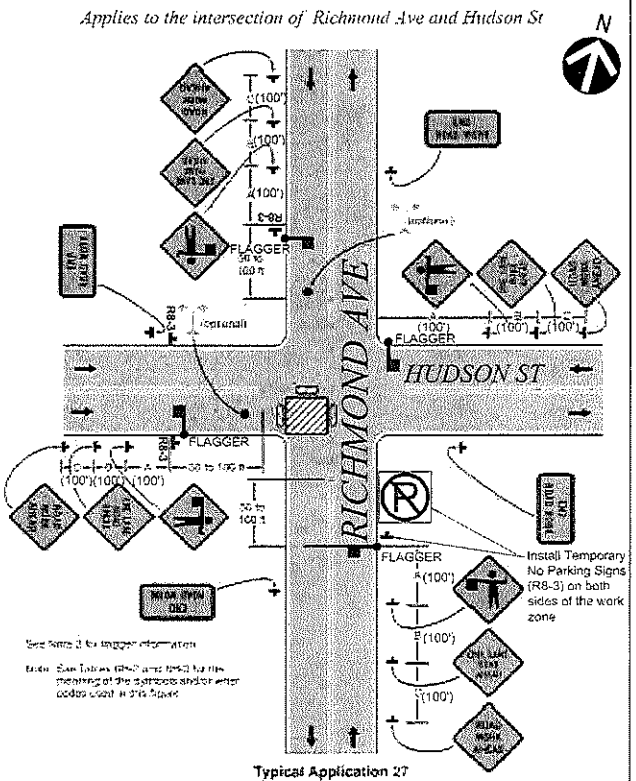

Typical Application 27

2009 Edition Page 687

Figure 6H-27. Closure at the Side of an Intersection (TA-27)

Applies to the intersection of Bassett St and Hudson St

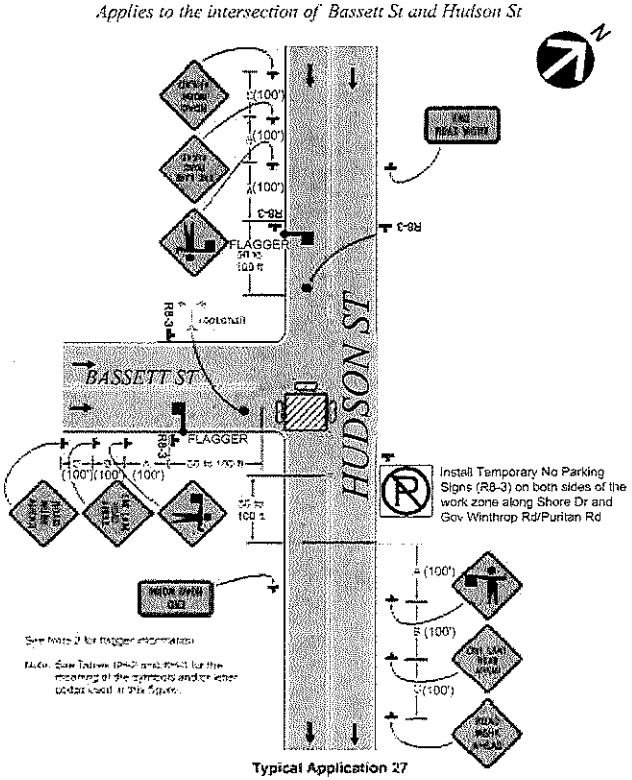

Typical Application 27

TEMPORARY TRAFFIC CONTROL (TTC) PLANS WILL COMPLY WITH THE FUNDAMENTAL PRINCIPLES OF TTC AS PER MUTCD PART 6. COMPONENTS OF THE TTC SHOWN ABOVE FOR THE INITIAL WORK AREA WILL BE SHIFTED AS WORK PROGRESSES AT ENGINEER'S DIRECTION.

TRC

NOT TO SCALE

NO.	DESCRIPTION	DATE	DR.BY	CK.BY	APP.BY
2	ADDED 3RD PARTY UTILITIES IN HUDSON ST WORK AREA AND CROSSING DETAILS	8/3/2021	PL	RES	DD
1	REMOVED TE-IN (R2 TO PROVIDE STUB AND VALVE, ADDED STANDARD DETAILS	7/31/2021	PL	JNS	DD
0	ISSUED FOR CONSTRUCTION	7/8/2021	PL	JNS	DD

nationalgrid
40 SYLVAN ROAD
WALTHAM, MA 02451

FINAL

GPLNG PROGRAM, STRATEGIC ASSET AND SYSTEM PLANNING
INSTALL 2" PL (60 PSIG)
32-56 HUDSON ST & LAWRENCE ST
LOWELL, MASSACHUSETTS

PROPOSED TEMPORARY TRAFFIC CONTROL PLAN

DWG SIZE	DESIGNER	ENGINEER	DATE:	ASSET I.D.	W.O. NO.:
22"X34"	P. LISTER	D. D'ELETTO	7/8/2021	XXXXXXXXXXX	1409755

DRAWING NO.

GPL-LOW-1409755 C-104

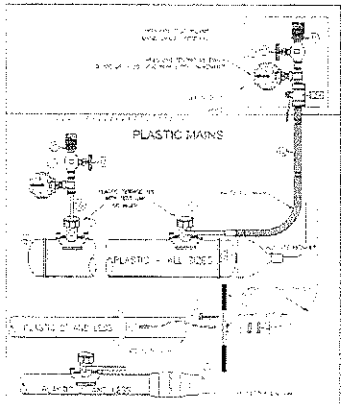

nationalgrid

PRESSURE TESTING OF NEW MAINS MAOP OF 124 PSIG OR LESS

CS-MAIN004

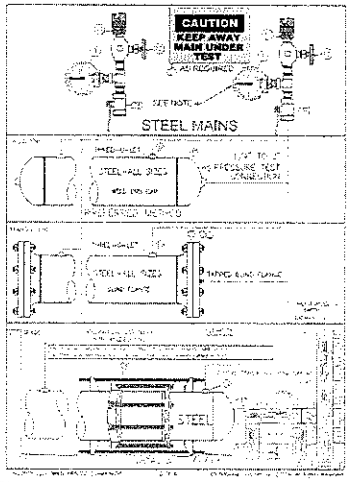

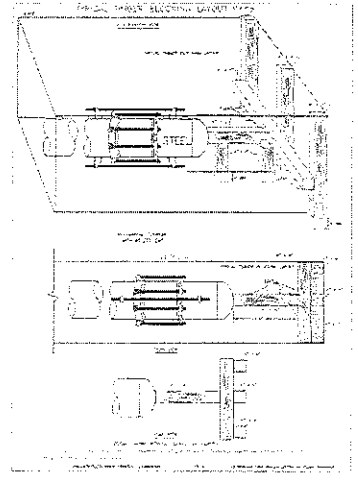

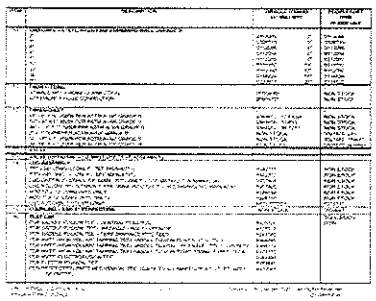

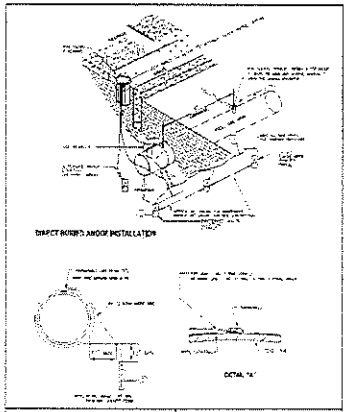

nationalgrid

INSTALLATION OF MAGNESIUM ANODES

030024-CS

MATERIAL LIST

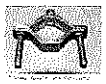

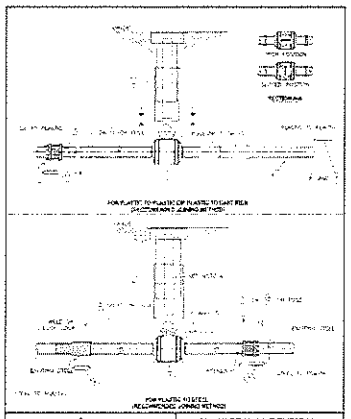

nationalgrid

2"-12" PE VALVE TYPICAL INSTALLATION

VALV-0020

TRC

NOT TO SCALE

NO.	DESCRIPTION	DATE	DRAFT	CHKD	APP'D
2	ADDED 3RD PARTY UTILITIES IN HUDSON ST BOSE AREA AND CROSSING DETAILS	8/3/2021	PL	[illegible]	[illegible]
1	REVISED TIE-IN (B) TO PROVIDE STUB AND VALVE, ADDED STANDARD DETAILS	7/21/2021	PL	JHS	[illegible]
0	ISSUED FOR CONSTRUCTION	7/8/2021	PL	JHS	[illegible]

nationalgrid
40 SYLVAN ROAD
WALTHAM, MA 02451

FINAL

GPLNG PROGRAM, STRATEGIC ASSET AND SYSTEM PLANNING
INSTALL 2" PL (60 PSIG)
32-56 HUDSON ST & LAWRENCE ST
LOWELL, MASSACHUSETTS

STANDARD DETAILS

DWG SIZE	DESIGNER	ENGINEER	DATE	ASSET I.D.	W.O. NO.
22"X34"	P. LISTER	D. D'ELETTO	7/8/2021	XXXXXXXXXXX	1409755

DRAWING NO.

GPL-LOW-1409755 C-201

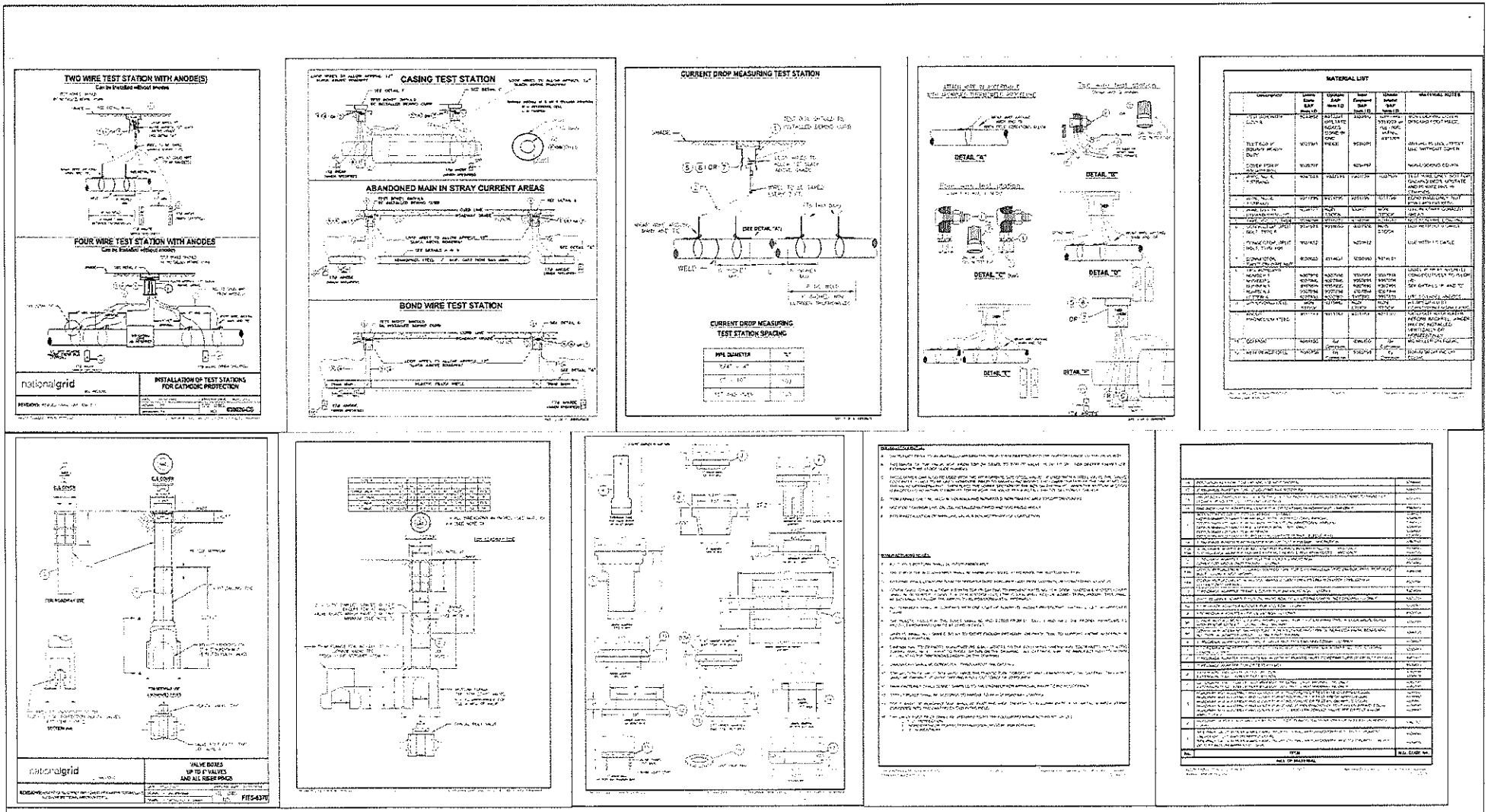

TRC

NOT TO SCALE

NO.	DESCRIPTION	DATE	DR.BY	CK.BY	APP.BY
2	ADDED 3RD PARTY UTILITIES IN HUDSON ST BORE AREA AND CROSSING DETAILS	8/3/2021	PL	JKB	DD
1	REMOVED TIE-IN (B) TO PROVIDE STUB AND VALVE, ADDED STANDARD DETAILS	7/21/2021	PL	JKB	DD
0	ISSUED FOR CONSTRUCTION	7/8/2021	PL	JKB	DD

nationalgrid
40 SYLVAN ROAD
WALTHAM, MA 02451

FINAL

GPLNG PROGRAM, STRATEGIC ASSET AND SYSTEM PLANNING
INSTALL 2" PL (60 PSIG)
32-56 HUDSON ST & LAWRENCE ST
LOWELL, MASSACHUSETTS

STANDARD DETAILS

DWG SIZE	DESIGNER	ENGINEER	DATE	ASSET I.D.	W.O. NO.:
22"X34"	P. LISTER	D. D'ELETTO	7/8/2021	XXXXXXXXXXX	1409755

DRAWING NO.

GPL-LOW-1409755 C-202

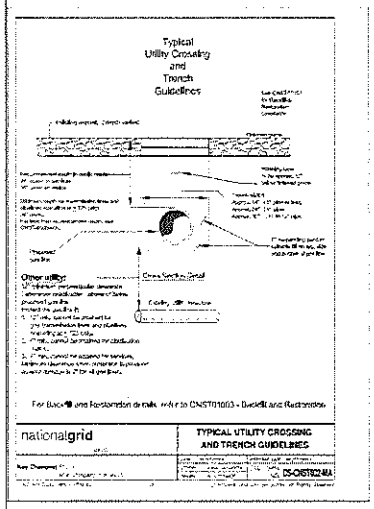

TRC

NOT TO SCALE

NO.	DESCRIPTION	DATE	DRAWN	CHKD	APPR
2	ADDED 3RD PARTY UTILITIES IN HUDSON ST WORK AREA AND CROSSING DETAILS	8/3/2021	PL	RES	DD
1	REVISED TRC-IN #2 TO PROVIDE STUB AND VALVE, ADDED STANDARD DETAILS	7/21/2021	PL	JRB	DD
0	ISSUED FOR CONSTRUCTION	7/8/2021	PL	JRS	DD

nationalgrid
40 SYLVAN ROAD
WALTHAM, MA 02451

FINAL

GPLNG PROGRAM, STRATEGIC ASSET AND SYSTEM PLANNING
INSTALL 2" PL (60 PSIG)
32-56 HUDSON ST & LAWRENCE ST
LOWELL, MASSACHUSETTS

STANDARD DETAILS

DWG SIZE	DESIGNER	ENGINEER	DATE:	ASSET I.D.	W.O. NO.:
22"X34"	P. LISTER	D. O'ELETTO	7/8/2021	XXXXXXXXXXX	1409755

PAGE 10 OF 10

DRAWING NO.

GPL-LOW-1409755 C-203