BARTLETT COMMUNITY PARTNERSHIP SCHOOL ACCESSIBILITY IMPROVEMENTS

IN THE CITY OF
LOWELL
MIDDLESEX COUNTY
COMMONWEALTH OF MASSACHUSETTS

INDEX

SHEET NO.	DESCRIPTION
1	TITLE SHEET & INDEX
2	LEGEND & NOTES
3	EXISTING CONDITIONS PLAN
4	DEMOLITION & SITE PREPARATION PLAN
5	LAYOUT & MATERIALS PLAN
6	ELEVATION
7	GRADING PLAN
8	CONSTRUCTION DETAILS
9	CONSTRUCTION DETAILS

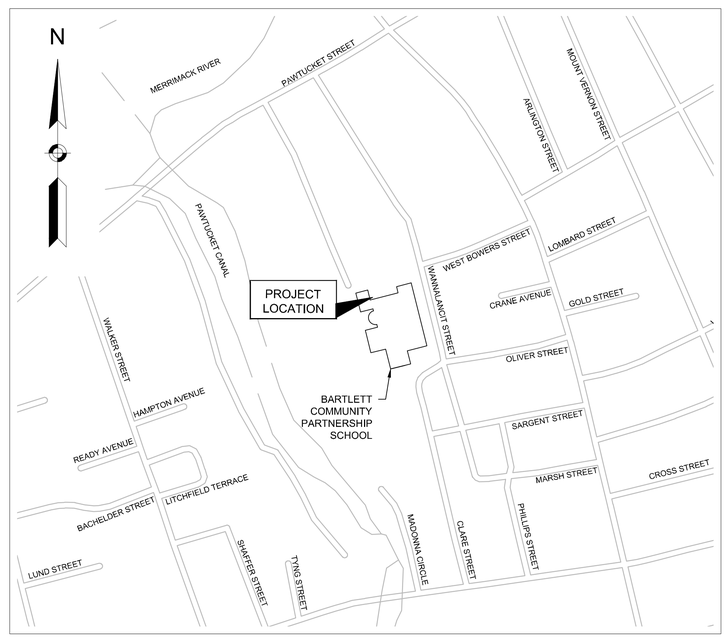

LOCATION MAP

1000 0 1000 2000 3000 4000

SCALE: 1" = 250'

GPI Engineering Design Planning Construction Management
978.570.2999 GPINET.COM
Greenman-Pedersen, Inc.
181 Ballardvale Street, Suite 202
Wilmington, MA 01887

PREPARED FOR
CITY OF LOWELL
375 MERRIMACK STREET
LOWELL, MA 02702

BARTLETT COMMUNITY PARTNERSHIP SCHOOL ACCESSIBILITY IMPROVEMENTS
79 WANNALANCIT STREET
LOWELL, MASSACHUSETTS

REVISIONS

NO.	REVISION	DATE

06/21/2023

DRAWN/DESIGN BY	CHECKED BY
JPT	GJH

TITLE SHEET & INDEX

SCALE: AS NOTED

NEX-2300139.00

2300139_CS.DWG 6/20/2023

LEGEND

SGC	SLOPED GRANITE CURB
VGC	VERTICAL GRANITE CURB
SCC	SLOPED CONCRETE CURB
VCC	VERTICAL CONCRETE CURB
CCB	CAPE COD BERM
DSLY	DOUBLE SOLID LINE YELLOW
DDLY	DOUBLE DASHED LINE YELLOW
SDLY	SINGLE DASHED LINE YELLOW
SSLY	SINGLE SOLID LINE YELLOW
SSLW	SINGLE SOLID LINE WHITE
SDLW	SINGLE DASHED LINE WHITE
G	GAS LINE
T	UNDERGROUND TELEPHONE
W	WATER LINE
E	UNDERGROUND ELECTRIC
	WOOD GUARDRAIL
	METAL GUARDRAIL
	CHAIN LINK FENCE
	STOCKADE FENCE
	POST & RAIL FENCE
	WIRE FENCE
90	CONTOUR ELEVATION
	TREE
	UTILITY POLE
	GUY WIRE
	OVERHEAD WIRE
	TREELINE
PB	PULL BOX
	SIGN
98.99	SPOT ELEVATION
D	DRAIN MANHOLE
	CATCH BASIN
R	ROOF DRAIN
C	CLEANOUT
V	VENT
S	SEWER MANHOLE
T	TELEPHONE MANHOLE
E	ELECTRIC MANHOLE
W	WATER MANHOLE
M	MANHOLE
GV	GAS VALVE
	GAS SHUT OFF
WV	WATER VALVE
	WATER SHUT OFF
	FIRE HYDRANT
	BOLLARD
GM	GAS METER
EM	ELECTRIC METER
	MONITORING WELL
	LIGHT POLE
	BORING

GENERAL ABBREVIATIONS

ABAN	ABANDON
ADJ	ADJUST
APPROX.	APPROXIMATE
A.C.	ASPHALT CONCRETE
BIT.	BITUMINOUS
BC	BOTTOM OF CURB
BD.	BOUND
BL	BASELINE
BLDG	BUILDING
BM	BENCHMARK
BO	BY OTHERS
BOS	BOTTOM OF SLOPE
CB	CATCH BASIN
CEM	CEMENT
CI	CURB INLET
CIP	CAST IRON PIPE
CLF	CHAIN LINK FENCE
CL	CENTERLINE
CMP	CORRUGATED METAL PIPE
CSP	CORRUGATED STEEL PIPE
CONC	CONCRETE
CONT	CONTINUOUS
CONST	CONSTRUCTION
DI	DROP INLET
DIA	DIAMETER
DWY	DRIVEWAY
ELEV (or EL.)	ELEVATION
EOP	EDGE OF PAVEMENT
EXIST (or EX)	EXISTING
EXC	EXCAVATION
F&C	FRAME AND COVER
F&G	FRAME AND GRATE
FDN.	FOUNDATION
GG	GAS GATE
HMA	HOT MIX ASPHALT
HYD	HYDRANT
INV	INVERT
LP	LIGHT POLE
LT	LEFT
MAX	MAXIMUM
MH	MANHOLE
MHB	MASSACHUSETTS HIGHWAY BOUND
MIN	MINIMUM
NIC	NOT IN CONTRACT
NO.	NUMBER
PROJ	PROJECT
PROP	PROPOSED
R&D	REMOVE AND DISPOSE
RCP	REINFORCED CONCRETE PIPE
RD	ROAD
RDWY	ROADWAY
REM	REMOVE
RET	RETAIN
RET WALL	RETAINING WALL
R&R	REMOVE AND RESET
R&S	REMOVE AND SALVAGE
SB	STONE BOUND
SMH	SEWER MANHOLE
ST	STREET
STA	STATION
SW	SIDEWALK
TEMP	TEMPORARY
TC	TOP OF CURB
TOS	TOP OF SLOPE
TYP	TYPICAL

GENERAL NOTES

1. TOPOGRAPHICAL INFORMATION WAS PROVIDED BY GREENMAN-PEDERSEN, INC. (GPI) OF WILMINGTON, MA IN MAY OF 2023. THE VERTICAL DATUM IS BASED ON NGVD 1988 AND THE HORIZONTAL DATUM IS BASED ON MA MAINLAND NAD83.
2. THE LOCATIONS OF EXISTING UNDERGROUND UTILITIES ARE SHOWN IN AN APPROXIMATE WAY ONLY AND HAVE NOT BEEN INDEPENDENTLY VERIFIED BY THE OWNER OR ITS REPRESENTATIVE. THE CONTRACTOR SHALL DETERMINE THE EXACT LOCATION OF ALL EXISTING UTILITIES BEFORE COMMENCING WORK, AND AGREES TO BE FULLY RESPONSIBLE FOR ANY AND ALL DAMAGES WHICH MIGHT BE OCCASIONED BY THE CONTRACTOR'S FAILURE TO LOCATE EXACTLY AND TO PRESERVE ANY AND ALL UNDERGROUND UTILITIES. CALL "DIG-SAFE" 1-888-DIGSAFE (344-7233) AT LEAST 72 HOURS BEFORE COMMENCING CONSTRUCTION.
3. THE CONTRACTOR SHALL MAINTAIN ALL UTILITY SERVICES TO ADJACENT STRUCTURES AND PROPERTIES AT ALL TIMES.
4. WHERE AN EXISTING UNDERGROUND UTILITY IS FOUND TO CONFLICT WITH THE PROPOSED WORK, THE LOCATION, ELEVATION AND SIZE OF THE UTILITY SHALL BE ACCURATELY DETERMINED WITHOUT DELAY BY THE CONTRACTOR, AND THE INFORMATION FURNISHED TO THE ENGINEER FOR RESOLUTION OF THE CONFLICT.
5. AREAS OUTSIDE THE LIMITS OF PROPOSED WORK DISTURBED BY THE CONTRACTOR'S OPERATIONS SHALL BE RESTORED BY THE CONTRACTOR TO THEIR ORIGINAL CONDITION AT THE CONTRACTOR'S EXPENSE.
6. THE TERM "PROPOSED" (PROP.) MEANS WORK TO BE CONSTRUCTED USING NEW MATERIALS, OR, WHERE APPLICABLE, RE-USING EXISTING MATERIALS IDENTIFIED AS "REMOVE & RESET" (R&R).
7. CONTRACTOR SHALL FIELD VERIFY EXISTING SITE CONDITIONS AND REPORT ANY DISCREPANCIES TO THE ENGINEER PRIOR TO COMMENCING WORK.
8. WORK WITHIN THE PROJECT LIMITS SHALL MEET THE REQUIREMENTS OF THE CITY OF LOWELL DEPARTMENT OF PUBLIC WORKS.
9. UPON COMPLETION OF THE WORK, ALL DISTURBED AREAS SHALL BE RESTORED TO A CONDITION EQUAL TO OR BETTER THAN THAT WHICH EXISTED PRIOR TO CONSTRUCTION.
10. CONTRACTOR SHALL SECURE ALL PERMITS REQUIRED FOR THE WORK FROM ANY CITY DEPARTMENT, UTILITY COMPANY, OR OTHER JURISDICTION AFFECTED BY THE WORK.
11. THE CONTRACTOR SHALL PROTECT THE PROPERTY INCLUDING THE SITE AND SURROUNDING PUBLIC AREAS FROM DUST AND CONSTRUCTION DEBRIS AT ALL TIMES.
2. CONSTRUCTION STORAGE, EQUIPMENT, AND STOCKPILE LOCATIONS ARE THE CONTRACTOR'S RESPONSIBILITY AND SHALL BE COORDINATED WITH THE OWNER.
12. CONTRACTOR SHALL SECURE WORK AREA AT THE END OF EACH WORK DAY.

CONSTRUCTION NOTES

1. ALL WORK SHALL BE IN ACCORDANCE WITH THE MASSACHUSETTS ARCHITECTURAL ACCESS BOARD (AAB) REGULATIONS UNDER SECTION 521 OF THE CODE OF MASSACHUSETTS REGULATIONS (CMR) AND THE AMERICANS WITH DISABILITIES ACT (ADA) REGULATIONS.
2. SAWCUT ALL EDGES OF PAVING WHERE PAVEMENT IS TO BE REMOVED AND WHERE A NEW PAVEMENT IS TO ABUT EXISTING PAVEMENT. SAWCUT EDGES SHALL BE CLEAN AND STRAIGHT.
3. ALL MATERIALS INDICATED TO BE REMOVED AND DISPOSED SHALL BE DISPOSED IN ACCORDANCE WITH ALL APPLICABLE LOCAL AND STATE REGULATIONS REGARDING DISPOSAL OF MATERIALS.
4. EXCAVATE TO THE LINES AND GRADES REQUIRED TO PROPERLY INSTALL THE FOUNDATIONS IN INORGANIC, UNDISTURBED SOIL OR GRAVEL BORROW AS REQUIRED BY THE ENGINEER. ALL EXCAVATIONS SHALL BE DRY BEFORE PLACING ANY CONCRETE.
5. FOOTINGS SHALL BE PLACED ON SPECIFIED MATERIALS AT A MINIMUM DEPTH OF 4 FEET. ANY ADJUSTMENT OF FOOTING ELEVATIONS DUE TO FIELD CONDITIONS MUST BE SUBMITTED TO THE ENGINEER FOR APPROVAL.
6. ALL CEMENT CONCRETE WALKS INCLUDING THOSE AT RAMPS WILL BE REINFORCED WITH MACRO-SYNTHETIC FIBER MESH CONFORMING TO THE REQUIREMENTS OF ASTM C 1116 TYPE III FIBER REINFORCED CONCRETE. FIBER MESH WILL BE DESIGNED FOR USE IN CONCRETE SIDEWALK APPLICATIONS, AND SHALL BE ALKALI, ACID AND SALT RESISTANT, AND NON-RUSTING.
7. CONTRACTOR SHALL PROVIDE EXPANSION JOINTS IN CONCRETE WALKS WHERE WALKS ABUT BUILDINGS WALLS, CONCRETE WALLS, RETAINING WALLS, AND WHERE NEW WALKS ABUT EXISTING WALKS.

GRADING NOTES

1. THE CONTRACTOR SHALL FIELD VERIFY ALL EXISTING ELEVATIONS PRIOR TO PROCEEDING WITH THE WORK.
2. ANY DISCREPANCIES OR CONFLICTS ARISING BETWEEN EXISTING CONDITIONS AND THE PLANS SHALL BE BROUGHT TO THE ATTENTION OF THE ENGINEER BEFORE PROCEEDING.
3. ELEVATIONS AT LOCATIONS OF ALL BUILDING ENTRANCES SHALL MATCH EXISTING. CONTRACTOR TO FIELD VERIFY DOOR THRESHOLD ELEVATIONS PRIOR TO CONSTRUCTION AND ALERT ENGINEER OF ANY DISCREPANCIES,
4. CONTRACTOR SHALL MATCH EXISTING GRADE AT THE LIMIT OF PROPOSED WORK. THE JOINT BETWEEN EXISTING AND PROPOSED PAVEMENT SHALL BE TREATED WITH A HOT POURED RUBBERIZED ASPHALT ADHESIVE.
5. CONTRACTOR TO CONSTRUCT THE RAMPS TO THE GRADES AND SLOPES INDICATED ON THE PLANS, AND IN NO CASE SHALL THE GRADES EXCEED THE MAXIMUM SLOPE OF 1:12 PER ACCESSIBILITY REGULATIONS. CONTRACTOR SHALL SUBMIT ANY DEVIATIONS IN GRADES OR SLOPES TO THE ENGINEER FOR APPROVAL.
6. ALL LEVEL LANDINGS SHALL HAVE A MIN. SLOPE OF 1.0% AND A MAX. SLOPE OF 1.5% IN ANY DIRECTION.

GPI Engineering Design Planning Construction Management
978.570.2999 GPINET.COM
Greenman-Pedersen, Inc.
181 Ballardvale Street, Suite 202
Wilmington, MA 01887

PREPARED FOR
CITY OF LOWELL
375 MERRIMACK STREET
LOWELL, MA 02702

BARTLETT COMMUNITY PARTNERSHIP SCHOOL ACCESSIBILITY IMPROVEMENTS
79 WANNALANCIT STREET
LOWELL, MASSACHUSETTS

REVISIONS

NO.	REVISION	DATE

06/21/2023

DRAWN/DESIGN BY	CHECKED BY
LAD	GJH

LEGEND & NOTES

SCALE: N.T.S.

NEX-2300139.00

2300139_LE.DWG 6/16/2023

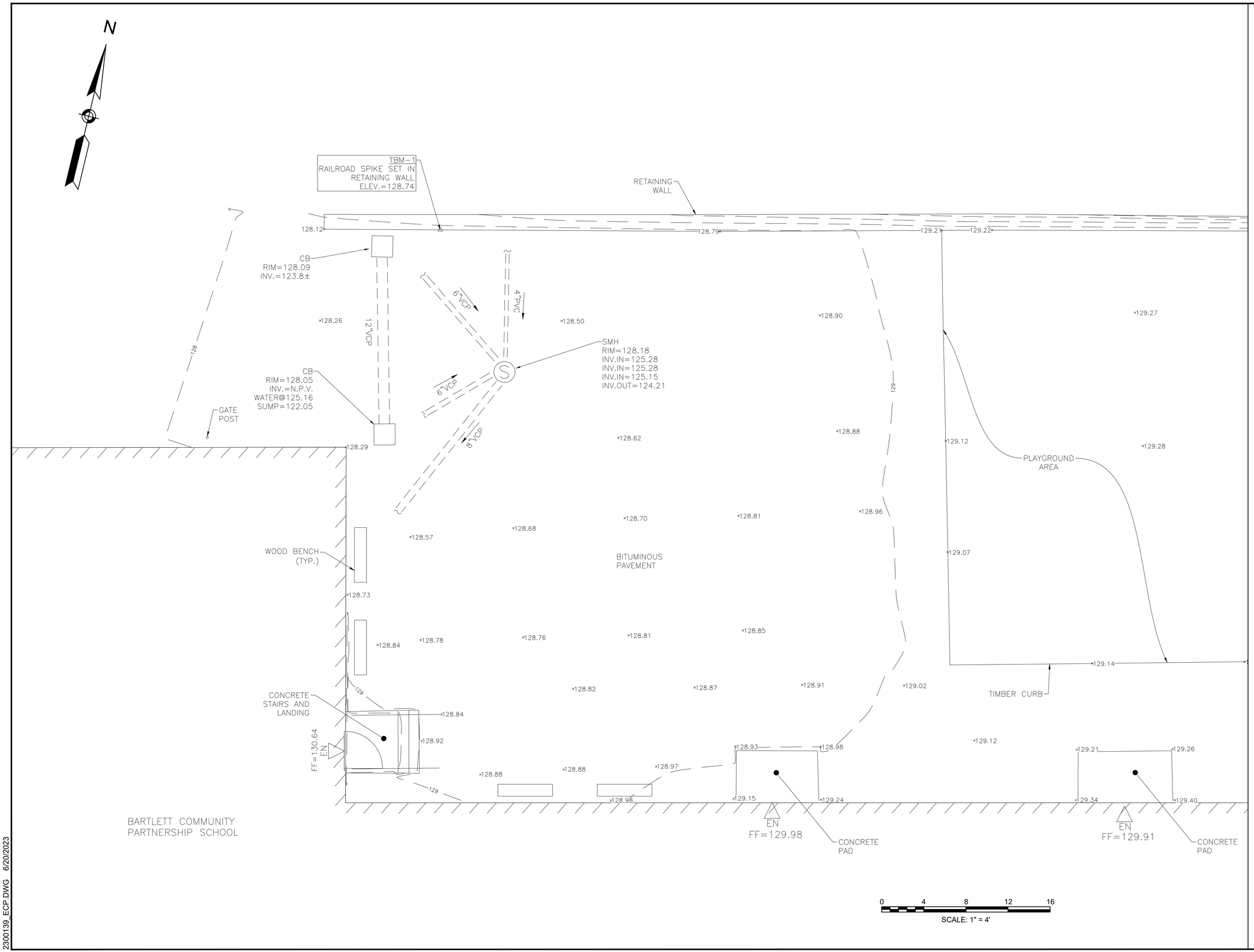

2300139_ECP.DWG 6/20/2023

GPI Engineering Design Planning Construction Management
978.570.2999 GPINET.COM
Greenman-Pedersen, Inc.
181 Ballardvale Street, Suite 202
Wilmington, MA 01887

PREPARED FOR
CITY OF LOWELL
375 MERRIMACK STREET
LOWELL, MA 02702

BARTLETT COMMUNITY PARTNERSHIP SCHOOL ACCESSIBILITY IMPROVEMENTS
79 WANNALANCIT STREET
LOWELL, MASSACHUSETTS

REVISIONS

NO.	REVISION	DATE

06/21/2023

DRAWN/DESIGN BY	CHECKED BY
JPT	GJH

EXISTING CONDITIONS PLAN

SCALE: 1" = 4'

NEX-2300139.00

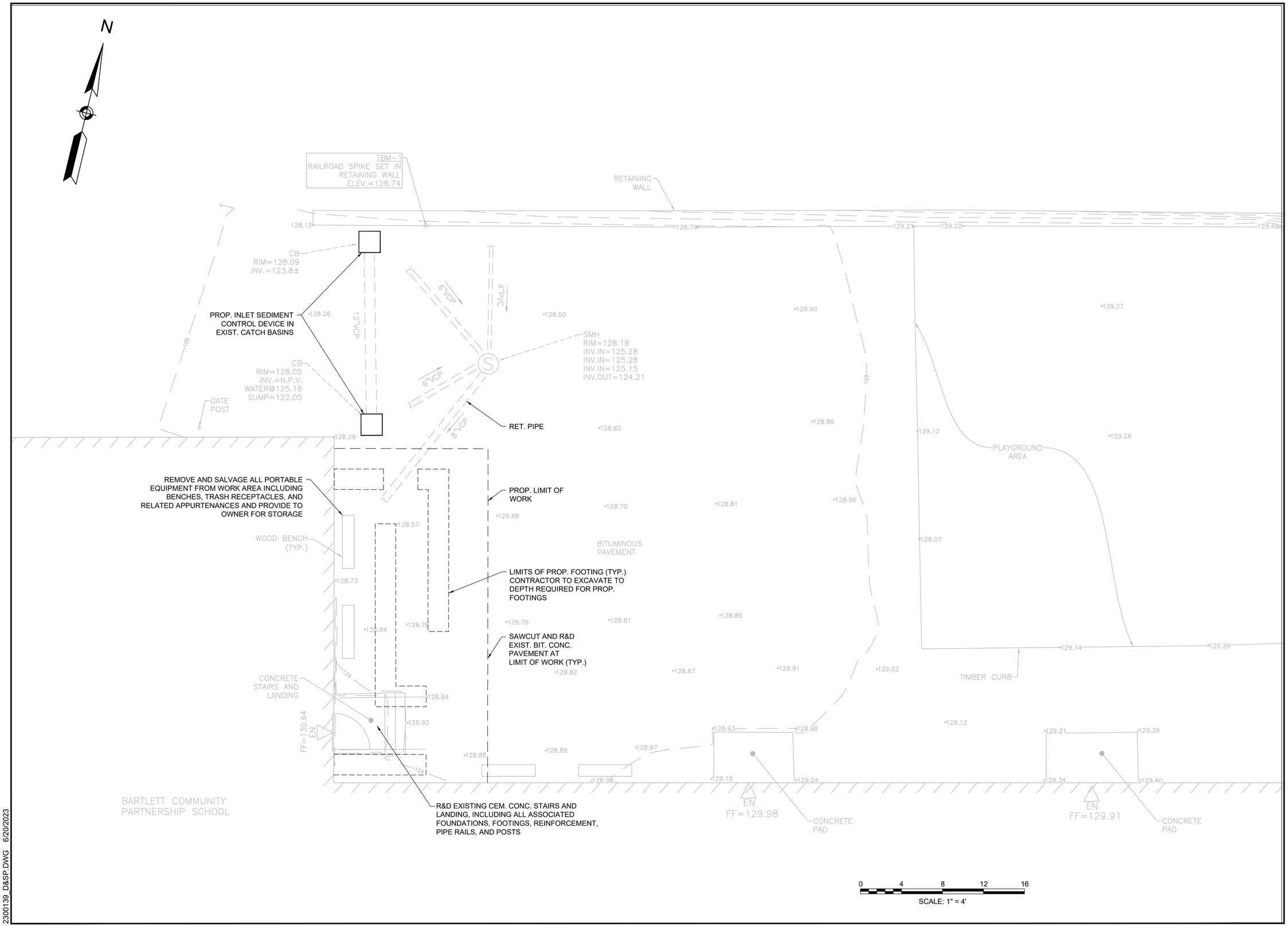

2300139_D&SP.DWG 6/20/2023

GPI Engineering Design Planning Construction Management
978.570.2999 GPINET.COM
Greenman-Pedersen, Inc.
181 Ballardvale Street, Suite 202
Wilmington, MA 01887

PREPARED FOR
CITY OF LOWELL
375 MERRIMACK STREET
LOWELL, MA #####

BARTLETT COMMUNITY PARTNERSHIP SCHOOL ACCESSIBILITY IMPROVEMENTS
79 WANNALANCIT STREET
LOWELL, MASSACHUSETTS

REVISIONS

NO.	REVISION	DATE

06/21/2023

DRAWN/DESIGN BY	CHECKED BY
LAD	GJH

DEMOLITION & SITE PREPARATION PLAN

SCALE: 1" = 4'

NEX-2300139.00

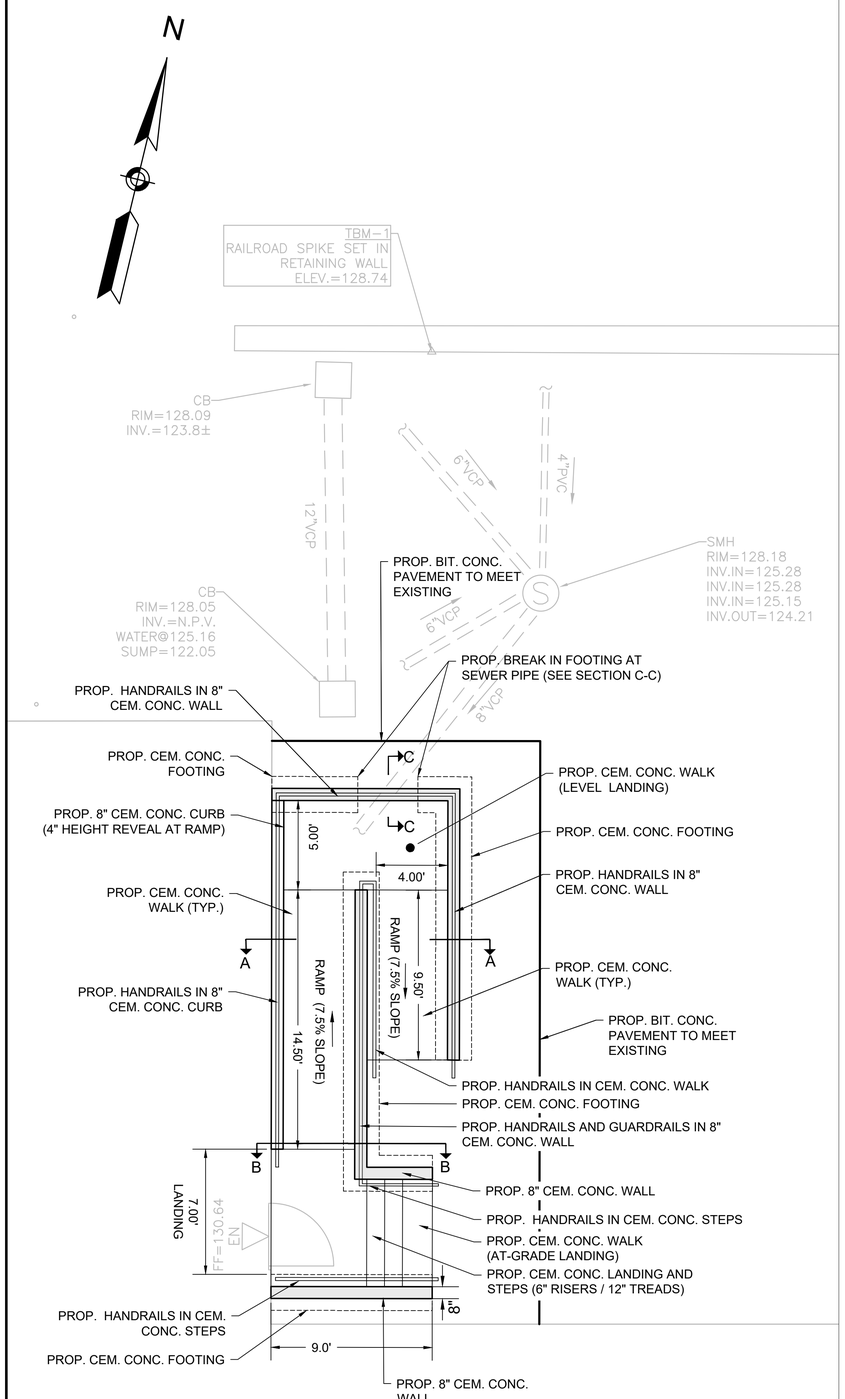

PLAN

0 4 8 12 16

SCALE: 1" = 4'

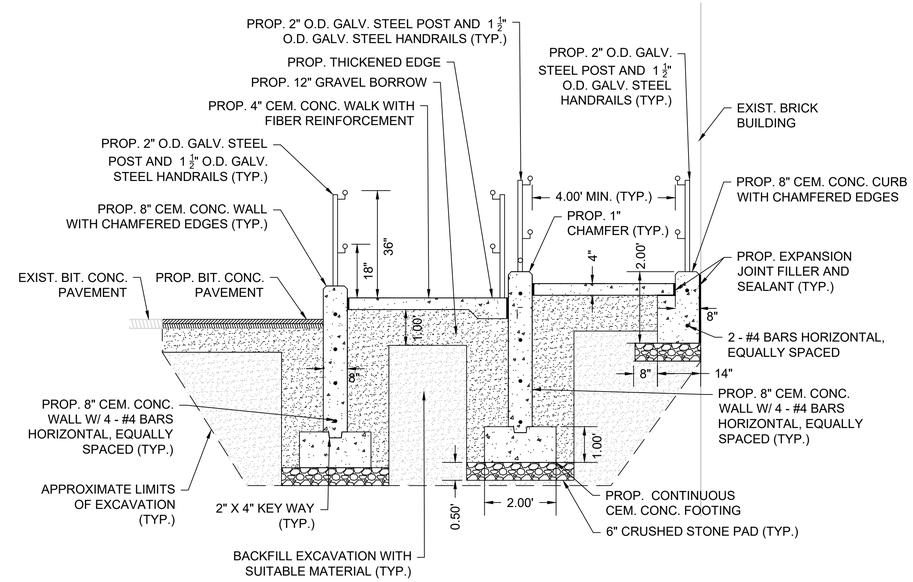

SECTION A-A

N.T.S.

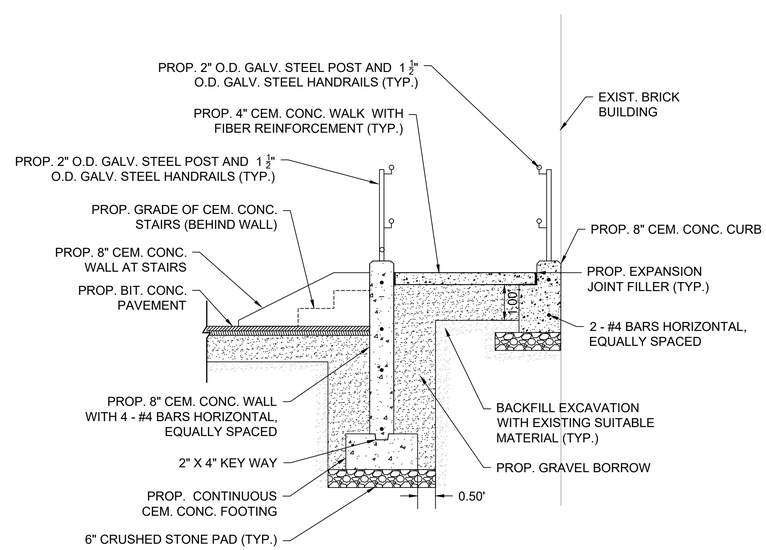

SECTION B-B

N.T.S.

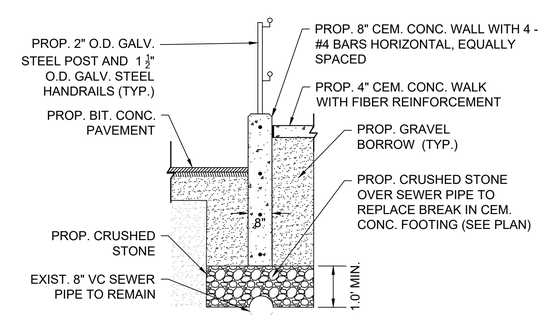

SECTION C-C

N.T.S.

GPI Engineering Design Planning Construction Management
978.570.2999 GPINET.COM
Greenman-Pedersen, Inc.
181 Ballardvale Street, Suite 202
Wilmington, MA 01887

PREPARED FOR
CITY OF LOWELL
375 MERRIMACK STREET
LOWELL, MA 02702

BARTLETT COMMUNITY PARTNERSHIP SCHOOL ACCESSIBILITY IMPROVEMENTS
79 WANNALANCIT STREET LOWELL, MASSACHUSETTS

REVISIONS

NO.	REVISION	DATE

06/21/2023

DRAWN/DESIGN BY	CHECKED BY
LAD	GJH

LAYOUT & MATERIALS PLAN

SCALE: AS NOTED

NEX-2300139.00

2300139_L&M.DWG 6/20/2023

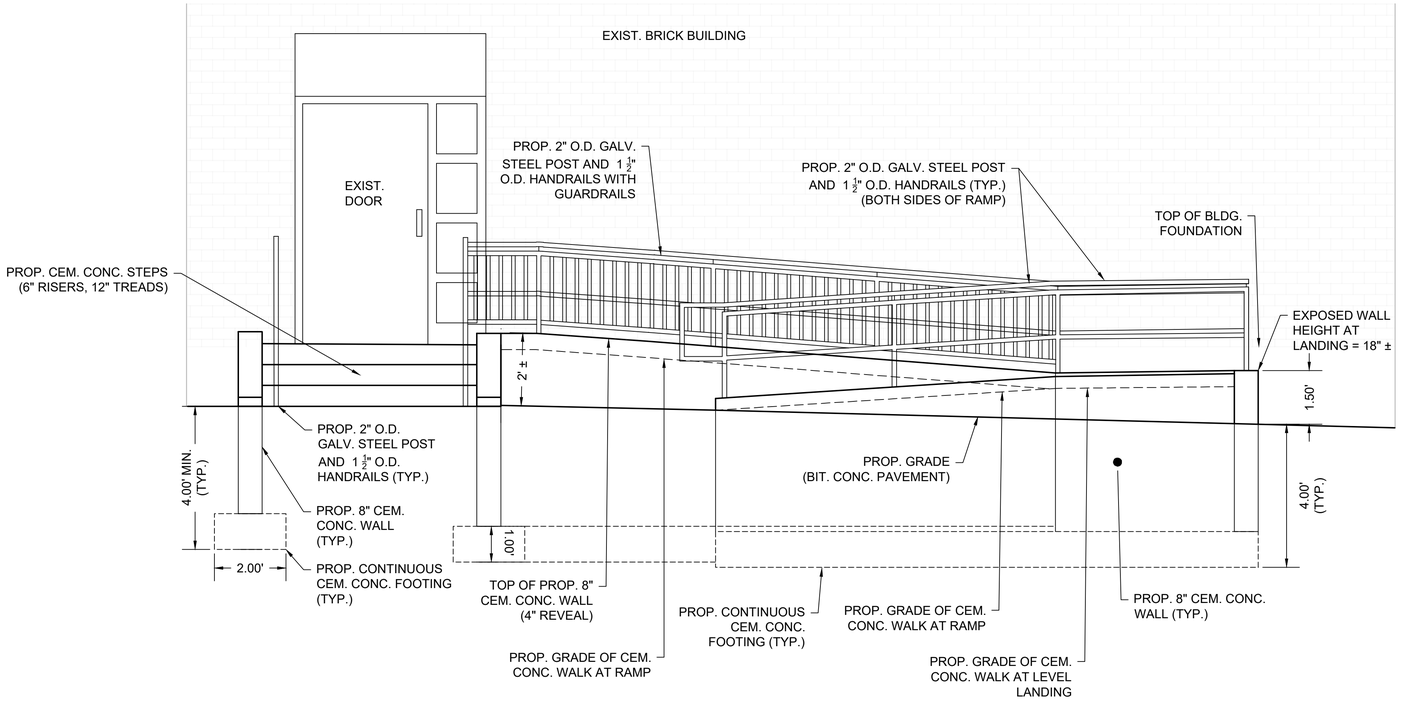

ELEVATION
N.T.S

GPI Engineering Design Planning Construction Management
978.570.2999 GPINET.COM
Greenman-Pedersen, Inc.
181 Ballardvale Street, Suite 202
Wilmington, MA 01887

PREPARED FOR
CITY OF LOWELL
375 MERRIMACK STREET
LOWELL, MA 02702

BARTLETT COMMUNITY PARTNERSHIP SCHOOL ACCESSIBILITY IMPROVEMENTS
79 WANNALANCIT STREET
LOWELL, MASSACHUSETTS

REVISIONS

NO.	REVISION	DATE

06/21/2023

DRAWN/DESIGN BY	CHECKED BY
LAD	GJH

ELEVATION

SCALE: N.T.S.

NEX-2300139.00

2300139_L&M.DWG 6/20/2023

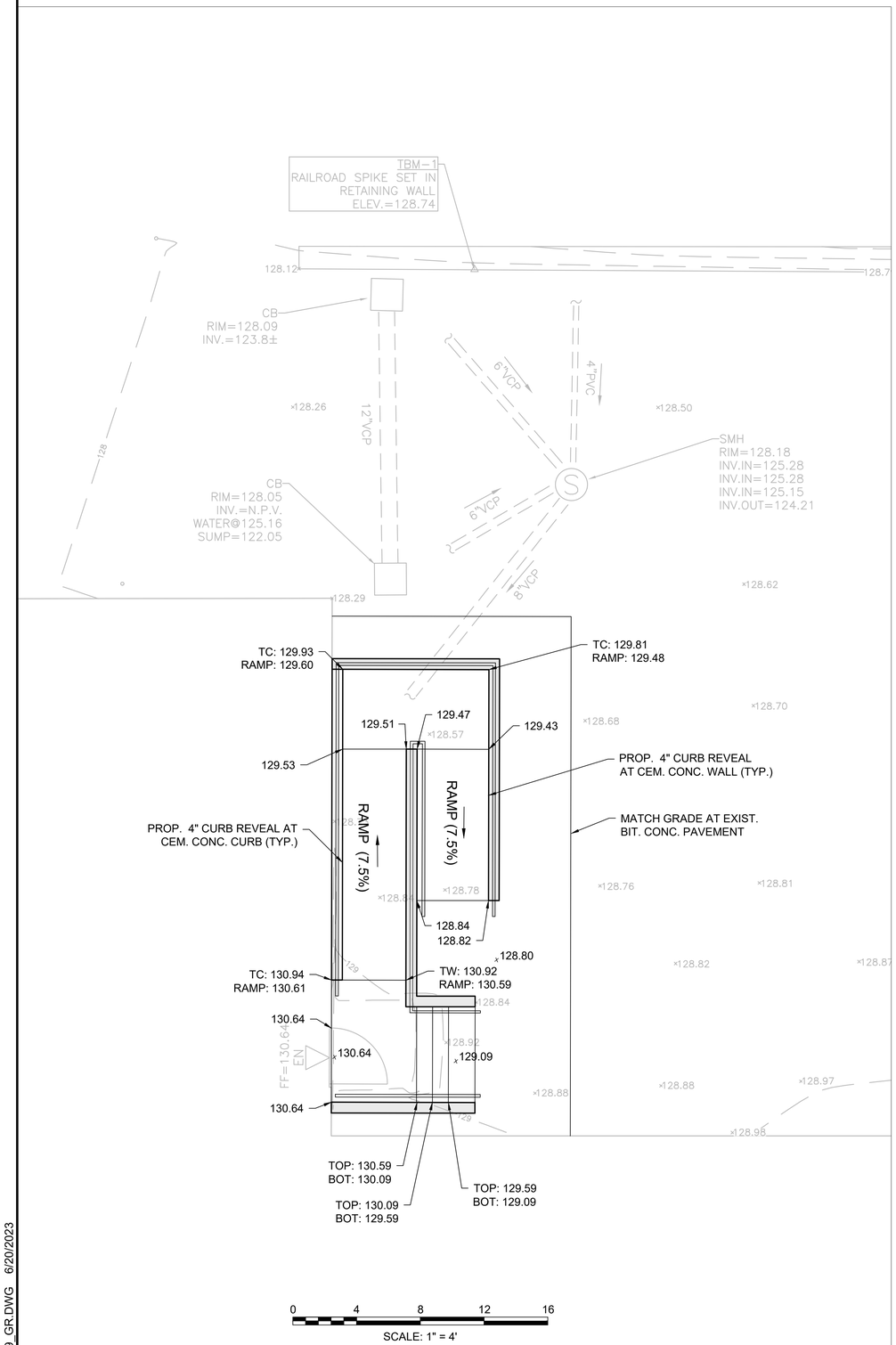

GPI
Engineering
Design
Planning
Construction Management
978.570.2999
GPINET.COM
Greenman-Pedersen, Inc.
181 Ballardvale Street, Suite 202
Wilmington, MA 01887

PREPARED FOR
CITY OF LOWELL
375 MERRIMACK STREET
LOWELL, MA 02702

BARTLETT COMMUNITY PARTNERSHIP SCHOOL ACCESSIBILITY IMPROVEMENTS
79 WANNALANCIT STREET
LOWELL, MASSACHUSETTS

REVISIONS

NO.	REVISION	DATE

06/21/2023

DRAWN/DESIGN BY	CHECKED BY
LAD	GJH

GRADING PLAN

SCALE: 1" = 4'

NEX-2300139.00

2300139_GR.DWG 6/20/2023

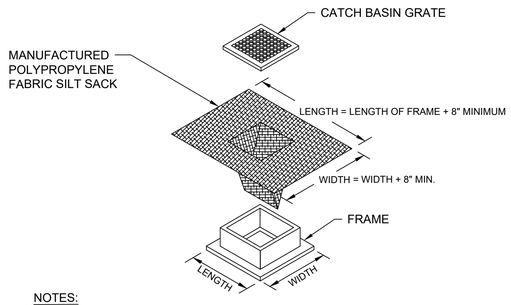

NOTES:

1. LENGTH AND WIDTH OF POLYPROPYLENE FABRIC MUST EXCEED EXISTING CATCH BASIN FRAME DIMENSIONS BY A MINIMUM OF 8".
2. REMOVE CATCH BASIN GRATE AND INSTALL POLYPROPYLENE FABRIC OVER CATCH BASIN FRAME. REPLACE CATCH BASIN GRATE TO SECURE POLYPROPYLENE FABRIC IN PLACE.
3. FOR USE ON ALL EXISTING CATCH BASINS WITHIN THE PROJECT LIMITS AND PROPOSED CATCH BASINS THAT ARE IN OPERATION DURING CONSTRUCTION.

INLET SEDIMENT CONTROL DEVICE DETAIL

NOT TO SCALE

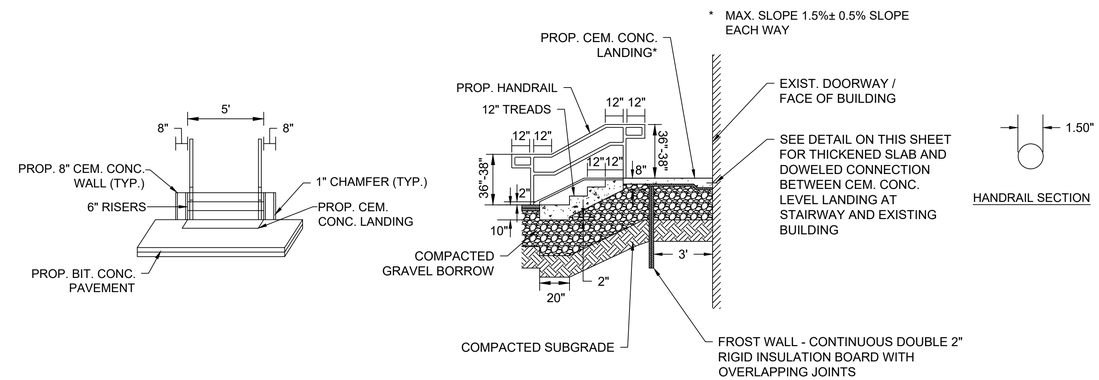

STAIRWAY AND HANDRAIL DETAIL

N.T.S.

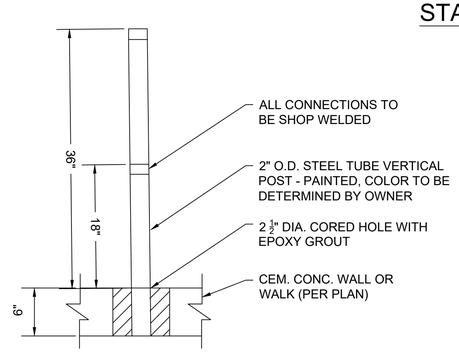

POST INSTALLATION

N.T.S.

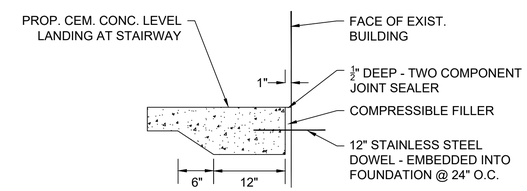

THICKENED SLAB AND DOWELED CONNECTION

N.T.S.

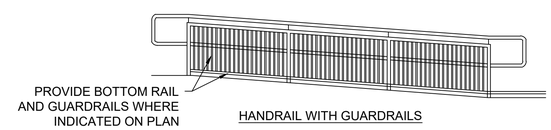

HANDRAIL WITH GUARDRAILS

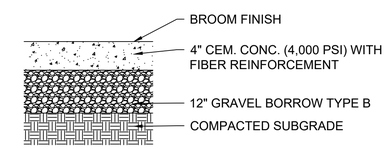

CEMENT CONCRETE WALK

N.T.S.

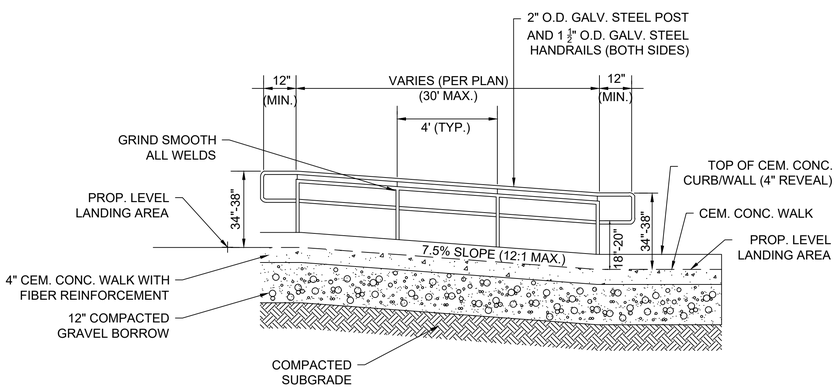

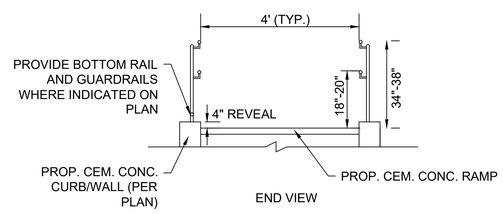

END VIEW

NOTE:
1. FOR ADDITIONAL DETAIL SEE 521 CMR 24.00 RAMPS.
2. PROVIDE GUARDS IN ADDITION TO HANDRAILS WHERE INDICATED ON PLANS.

CEMENT CONCRETE RAMP WITH HANDRAIL

NOT TO SCALE

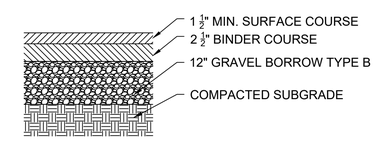

BITUMINOUS CONCRETE PAVEMENT

N.T.S.

GPI Engineering Design Planning Construction Management
978.570.2999 GPINET.COM
Greenman-Pedersen, Inc.
181 Ballardvale Street, Suite 202
Wilmington, MA 01887

PREPARED FOR
CITY OF LOWELL
375 MERRIMACK STREET
LOWELL, MA 02702

BARTLETT COMMUNITY PARTNERSHIP SCHOOL ACCESSIBILITY IMPROVEMENTS
79 WANNALANCIT STREET LOWELL, MASSACHUSETTS

REVISIONS

NO.	REVISION	DATE

06/21/2023

DRAWN/DESIGN BY	CHECKED BY
JPT	GJH

CONSTRUCTION DETAILS

SCALE: N.T.S.

NEX-2300139.00

2300139_DE.DWG 6/20/2023

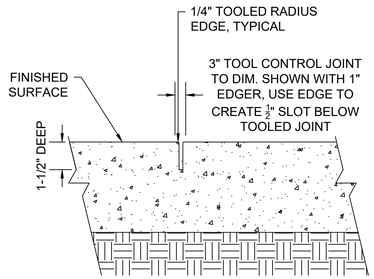

TOOLED CONTROL JOINT

AT 6' O.C. MAX. ALONG CEM. CONC. WALK

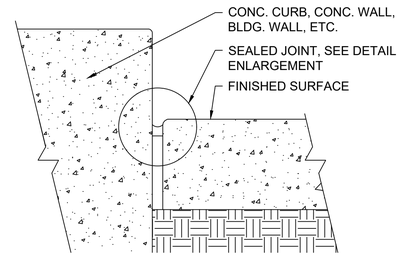

CONC. PAVING AT VERT. PLANE

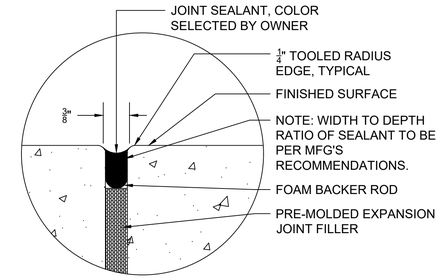

SEALED JOINT ENLARGEMENT

CONCRETE JOINTS

N.T.S.

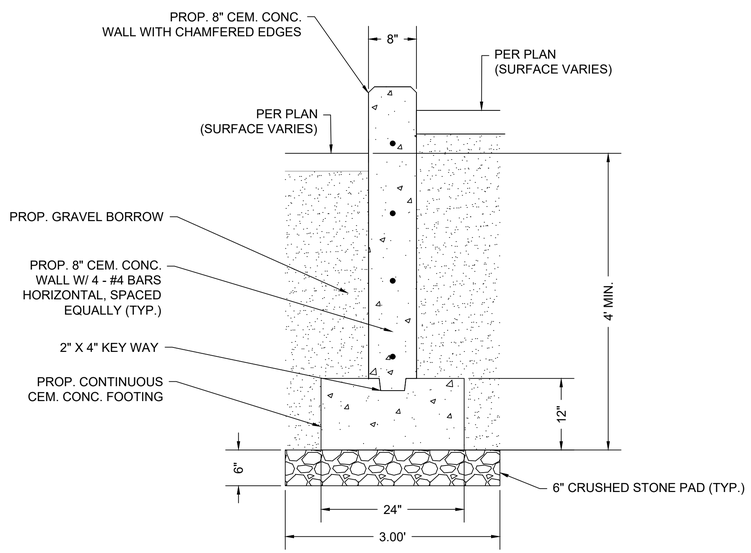

CEMENT CONCRETE WALL

N.T.S.

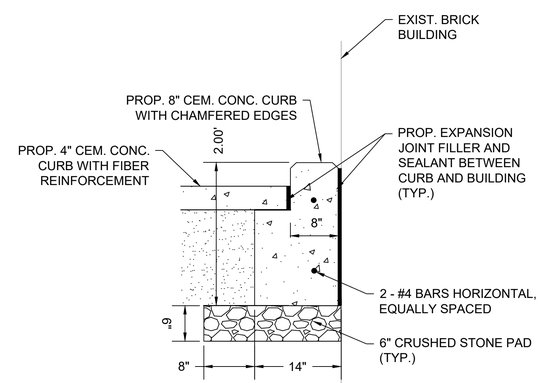

CEMENT CONCRETE CURB

N.T.S.

GPI Engineering Design Planning Construction Management
978.570.2999 GPINET.COM
Greenman-Pedersen, Inc.
181 Ballardvale Street, Suite 202
Wilmington, MA 01887

PREPARED FOR
CITY OF LOWELL
375 MERRIMACK STREET
LOWELL, MA 02702

BARTLETT COMMUNITY PARTNERSHIP
SCHOOL ACCESSIBILITY IMPROVEMENTS
79 WANNALANCIT STREET
LOWELL, MASSACHUSETTS

REVISIONS

NO.	REVISION	DATE

06/21/2023

DRAWN/DESIGN BY	CHECKED BY
JPT	GJH

CONSTRUCTION DETAILS

SCALE: N.T.S.

NEX-2300139.00

2300139_DE.DWG 6/20/2023